MINNESOTA
PUBLIC UTILITIES COMMISSION

Updated by 10.23.26 Order

State of Minnesota

Distributed Energy Resources Interconnection Process

(MN DIP)

v.2.5

Table of Contents

FORWARD ..... **- 1 -**

SECTION 1. APPLICATION ..... **- 2 -**

1.1 Applicability ..... - 2 -
1.2 Online Applications and Electronic Submission ..... - 4 -
1.3 Communications ..... - 4 -
1.4 Pre-Application Report ..... - 5 -
1.5 Interconnection Application ..... - 7 -
1.6 Modification of the Interconnection Application or a DER Interconnection ..... - 8 -
1.7 Site Control ..... - 9 -
1.8 Queue Position ..... - 10 -

SECTION 2. SIMPLIFIED PROCESS ..... **- 11 -**

2.1 Applicability ..... - 11 -
2.2 Simplified Process Application Review Process ..... - 11 -
2.3 Simplified Interconnection ..... - 12 -

SECTION 3. FAST TRACK PROCESS ..... **- 13 -**

3.1 Applicability ..... - 13 -
3.2 Initial Review ..... - 13 -
3.3 Customer Options Meeting ..... - 16 -
3.4 Supplemental Review ..... - 16 -

SECTION 4. STUDY PROCESS ..... **- 20 -**

4.1 Applicability ..... - 20 -
4.2 Scoping Meeting ..... - 20 -
4.3 System Impact Study ..... - 21 -
4.4 Facilities Study ..... - 22 -

SECTION 5. SECTION 5. PROVISIONS THAT APPLY TO ALL INTERCONNECTION APPLICATIONS ..... **- 24 -**

5.1 Interconnection Agreement ..... - 24 -
5.2 Time Frames and Extensions ..... - 24 -
5.3 Disputes ..... - 25 -
5.4 Interconnection Metering ..... - 25 -
5.5 Non-Warranty ..... - 26 -
5.6 Design, Procurement, Installation and Construction of Interconnection Facilities and Upgrades ..... - 26 -
5.7 Inspection, Testing, Commissioning and Authorization ..... - 28 -
5.8 Authorization Required Prior to Parallel Operation ..... - 28 -
5.9 Confidentiality ..... - 29 -
5.10 Insurance ..... - 30 -
5.11 Comparability ..... - 31 -
5.12 Record Retention ..... - 31 -
5.13 Coordination with Affected Systems ..... - 31 -
5.14 Capacity of the Distributed Energy Resource ..... - 31 -

GLOSSARY OF TERMS
MN DIP EDITS OVER TIME
ATTACHMENT 1: PRE-APPLICATION REPORT REQUEST FORM
ATTACHMENT 2: SIMPLIFIED APPLICATION FORM
EXHIBIT A – TERMS AND CONDITIONS FOR INTERCONNECTING AN INVERTER-BASED DER NO LARGER THAN 20 KW
EXHIBIT C – CERTIFICATE OF COMPLETION
ATTACHMENT 3: INTERCONNECTION APPLICATION FORM
ATTACHMENT 4: CERTIFICATION CODES AND STANDARDS
ATTACHMENT 5: CERTIFICATION OF DISTRIBUTED ENERGY RESOURCE EQUIPMENT
ATTACHMENT 6: SYSTEM IMPACT STUDY AGREEMENT
ATTACHMENT 7: FACILITIES STUDY AGREEMENT
ATTACHMENT 8: RATES
ATTACHMENT 9: MN DIP FLOW CHARTS

Updated by 10.23.26 Order

Forward

The Minnesota Public Utilities Commission is charged by Minnesota Statute §216B.1611 to establish generic, statewide standards for the interconnection and parallel operation of distributed energy resources[1] of no more than 10 MW. In updating Minnesota's interconnection standards, we strive to:

1) Establish a practical, efficient interconnection process that is easily understandable for everyone involved;
2) Maintain a safe and reliable electric system at fair and reasonable rates;
3) Give maximum possible encouragement of distributed energy resources consistent with protection of the ratepayers and the public;
4) Be consistent statewide and incorporate newly revised national standards;
5) Be technology neutral and non-discriminatory.

At a minimum, these standards must:

To the extent possible, be consistent with industry and other federal and state operational and safety standards;

Provide for the low-cost, safe, and standardized interconnection of distributed energy resources;

Take into account differing system requirements and hardware; as well as, the overall demand load requirements of individual utilities;

Allow for reasonable terms and conditions, consistent with the cost and operating characteristics of the various technologies, so that a utility can reasonably be assured of the reliable, safe and efficient operation of the interconnected equipment;

Establish a standard interconnection agreement that sets forth the contractual terms under which a company and customer agree that one or more facilities may be interconnected with the company's utility system; and standard applications for interconnection and parallel operation with the utility system.

This standards document is modelled after the Federal Energy Regulatory Commission's Small Generator Interconnection Process (FERC SGIP), and explains the process to interconnect Distributed Energy Resources for parallel operation with the Area Electrical Power System (Area EPS); including templates for applications and study agreements. There are three companion documents: 1) Minnesota Distributed Energy Resource Interconnection Agreement (MN DIA); 2) Minnesota Distributed Energy Resource Technical Interconnection and Interoperability Requirements (MN TIIR); and until updated or replaced 3) Attachment 6 Rates from the statewide interconnection standards adopted in 2004 (September 28, 2004 Order in E-999/CI-01-1023.)

The Commission is grateful to the participants of the Distributed Generation Workgroup comprised of representatives of Minnesota's utilities, distributed energy resource industries, and consumers who informed this update of the state's interconnection standards. As these standards go into effect and more distributed energy resources interconnect with utility systems, the Commission expects this to be a living document.

Updated by 10.23.26 Order

[1] "Distributed Energy Resources" (DER) is emerging terminology used to capture both traditional "distributed generation" and storage technologies; however, this term is not currently defined in Minnesota statute or rules, and at times the Commission applies it to a broader category that includes demand-side management (controlling load like air conditioners or water heaters) and, in some cases, even energy efficiency and electric vehicles. For this document, the definition is consistent with IEEE 1547 and limited to generation and storage, and does not include DER that behave solely as load.

Section 1. Application

1.1 Applicability

1.1.1 The Minnesota Distributed Energy Resources Interconnection Process (MN DIP) applies to any Distributed Energy Resource (DER) no larger than 10 MW Nameplate Rating interconnecting to, and operating in parallel with, an Area EPS distribution system in Minnesota.[2] See Minnesota Technical Requirements for more detail on what constitutes parallel operation. For the applicable interconnection process for DERs larger than 10 MW Nameplate Rating interconnected to, and operated in parallel with, an Area EPS distribution system in Minnesota, contact the Area EPS for details on the applicable interconnection process. The exception is Distributed Energy Resource interconnections that are subject to Federal Energy Regulatory Commission (FERC) jurisdiction.[3]

1.1.1.1 An application to interconnect a certified[4], inverter-based DER with a Nameplate Rating of 50 kilowatts (kW) or less and an Export Capacity of 20 kW or less shall be evaluated under the Section 2 Simplified Process.

1.1.1.2 An application to interconnect a DER shall be evaluated under the Section 3 Fast Track Process if the eligibility requirements of Section 3.1. An application to interconnect a DER that does not meet the Simplified Process or Fast Track Process eligibility requirements, or does not pass the review as described in either process, shall be evaluated under the Study Process.

1.1.1.3 Attachment 8 contains flow charts that provide an overview of the Simplified Process, the Fast Track Process, and the Study Process.

1.1.1.4 Prior to submitting an Interconnection Application, the Interconnection Customer may ask the Area EPS Operator's Interconnection Coordinator whether the proposed interconnection is subject to these procedures. The Area EPS Operator shall respond within fifteen (15) Business Days.

1.1.2 Capitalized terms used herein shall have the meanings specified in the Glossary of Terms or the body of these procedures. All references to DER Nameplate Rating or Export Capacity as described in 5.14.3 herein are in alternating current (AC).

1.1.3 Neither these procedures nor the requirements included hereunder unless by mutual agreement of the Area EPS Operator and the Interconnection Customer apply to DERs interconnected, approved for interconnection or Interconnection Applications submitted to by the Area EPS Operator prior to June 17, 2019, and later deemed complete (provided these applications are later deemed complete following any applicable revisions no later than 60 days following this date). These procedures and the requirements hereunder shall apply to applications to modify existing DERs if the application to modify is submitted on or after June 17, 2019.

1.1.3.1 Nothing in this MN DIP affects an Interconnection Customer's Queue Position assigned before the effective date of this MN DIP. The Parties agree to complete work on any interconnection study agreement executed prior to the

Updated by 10.23.26 Order

[2] Minnesota Statute §216B.1611

[3] The Federal Regulation and Development of Power Act (16 U.S. Code Subchapter II) outlines federal regulation of wholesale sales and transmission in interstate commerce and state regulation of generation, distribution, and retail sales.

[4] See Attachment 4 and Attachment 5 for certification criteria.

effective date of this MN DIP in accordance with the terms and conditions of that interconnection study agreement. Any new studies or other additional work will be completed pursuant to this MN DIP.

1.1.4 Infrastructure security of electric system equipment and operations and control hardware and software is essential to ensure day-to-day reliability and operational security. All public utilities are expected to meet basic standards for electric system infrastructure and operational security, including physical, operational, and cyber-security practices.

1.1.5 References in these procedures to an Interconnection Agreement are to the Uniform Statewide Contract or Minnesota Distributed Energy Resource Interconnection Agreement (MN DIA).

1.1.5.1 The Uniform Statewide Contract (Minn. R. 7835.9910) replaces the need to use the MN DIA if all of the following conditions are met and the Interconnection Customer does not request the MN DIA.

1.1.5.1.1 Certified equipment

1.1.5.1.2 40 kW*ac* or less of a qualifying DER Nameplate Rating

1.1.5.1.3 No Area EPS system modifications are required to accommodate the DER;

1.1.5.1.4 Signed Uniform Statewide Contract and Attachment 2: Simplified Application.

1.1.5.2 The Area EPS Operator may propose in its tariff an increase to the size threshold for the application of the Uniform Statewide Contract as a replacement for the MN DIA in its tariff. There may also be situations where the Interconnection Customer would need to sign both the Uniform Statewide Contract and the MN DIA; such as, where the Nameplate Rating of the system is above the size threshold where the Uniform Statewide Contract replaces the MN DIA but the DER qualifies for net metering (Minn. Stat.§216B.164 and Minn. R. Ch. 7835) under the Uniform Statewide Contract.

1.1.5.3 The reference to Interconnection Agreement also applies when the Area EPS Operator and Interconnection Customer modify MN DIA with Commission approval.

1.1.5.4 Export Capacity limited systems are required to execute a MN DIA as defined in section 5.14.3.

1.1.6 The Area EPS Operator and Interconnection Customer may jointly seek Commission approval of an amendment to the MN DIA for use between them for a specific Interconnection Application in the following ways:

1.1.6.1 File a Petition with the Commission; or

1.1.6.2 File a Notice with the Commission of the proposed amendment. The Notice should include a copy of the amendment showing in redline format how the amendment would alter the MN DIA between the Area EPS Operator and Interconnection Customer for the Interconnection Application at issue. If no objection or notice of intent to object is filed within 30 days, then the proposed

Updated by 10.23.26 Order

amendment would be considered to be approved by the Commission. If there is a timely filed objection of notice of intent to object, then the proposed amendment would not be considered to have been approved by the Commission and could only be used if the Commission subsequently issues a written order authorizing its use.

1.1.7 Commission approval of an amendment to the Interconnection Agreement is not needed where such an amendment only addresses updating or correcting: 1) information specified in the Interconnection Application; 2) exhibits or attachments to the Interconnection Agreement as long as they are not additional agreements or requirements not covered in the MN DIP or MN Technical Requirements; or 3) information provided in the blank lines to the MN DIA or Uniform Statewide Contract forms.

1.2 Online Applications and Electronic Submission

1.2.1 Each Area EPS Operator shall allow Pre-Application Report requests and Interconnection Applications to be submitted electronically; such as, through the Area EPS Operator's website or via email. The Area EPS Operator may allow the Interconnection Agreement to be submitted electronically.

1.2.1.1 The Area EPS Operator may allow for electronic signatures to be used for the Pre-Application Report request, Interconnection Application and related agreements, including the Interconnection Agreement, and forms.

1.2.2 Each Area EPS Operator shall dedicate a page on their website or direct customers to a website with generic information on the MN DIP that the Area EPS Operator finds comports with its process. The relevant information that shall be available to the Interconnection Customer via a website includes:

1.2.2.1 The MN DIP and attachments in an electronically searchable format;

1.2.2.2 The Area EPS Operator's Interconnection Application and all associated forms in a format that allows for electronic entry of data;

1.2.2.3 The Uniform Statewide Contract and the Area EPS Operator's tariff version of the MN DIA;

1.2.2.4 Example documents; including, at a minimum, an example one-line diagram with required labels; and

1.2.2.5 Contact information for the Area EPS Operator's DER interconnection coordinator(s) and submission of Interconnection Applications, including email and phone number.

1.3 Communications

1.3.1 The Area EPS Operator shall designate a DER interconnection coordinator(s) and this person or persons shall serve as a single point of contact from which general information on the application process and on Affected System(s) can be obtained through informal request from the Interconnection Customer presenting a proposed project for a specific site. The name, telephone number, and e-mail address of such contact employee or office shall be made available on the Area EPS Operator's Internet website in accordance with section 1.2.2.5. Some Area EPS Operators may have several DER Interconnection Coordinators assigned. The DER

Updated by 10.25.26 Order

Interconnection Coordinator shall be available to provide coordinator assistance with the Interconnection Customer, but is not responsible to directly answer or resolve all of the issues involved in review and implementation of the interconnection process and standards. Upon request, electric system information provided to the Interconnection Customer should include relevant system study results, interconnection studies, and other materials useful to an understanding of an interconnection at a particular point on the Area EPS Operator's System, to the extent such provision does not violate the privacy policies of the Commission, confidentiality provisions of prior agreements or critical infrastructure requirements. This listing does not include a Pre-Application Report under Section 1.4. The Area EPS Operator shall comply with reasonable requests for such information.

1.3.2 The Interconnection Customer may designate, on the Interconnection Application or in writing after the Application has been submitted, an Application Agent to serve as the single point of contact to coordinate with the DER Interconnection Coordinator on their behalf. Designation of an Application Agent does not absolve the Interconnection Customer from signing interconnection documents and the responsibilities outlined in the MN DIP and Interconnection Agreement.

1.3.3 Engineering Communication: Upon request of either party or the Commission, for the purpose of exchanging information regarding an active Interconnection Application, the Area EPS Operator and the Interconnection Customer shall each identify one point of contact with technical expertise for their organizations.

1.4 Pre-Application Report

1.4.1 In addition to the information described in section 1.3.1, which may be provided in response to an informal request, an Interconnection Customer may submit a formal written request form along with a non-refundable fee of up to $300 for a Pre-Application Report on a proposed project at a specific site. The Area EPS Operator shall provide the data described in section 1.4.2 to the Interconnection Customer within fifteen (15) Business Days of receipt of the completed request form and payment of the up to $300 fee. The Pre-Application Report produced by the Area EPS Operator is non-binding, does not confer any rights, and the Interconnection Customer must still successfully apply to interconnect to the Area EPS Operator's system. The written Pre-Application Report request form shall include the information in sections 1.4.1.1 through 1.4.1.8 below to clearly and sufficiently identify the location of the proposed Point of Common Coupling.

1.4.1.1 Project contact information, including name, address, phone number, and email address.

1.4.1.2 Project location (street address with nearby cross streets and town). Interconnection Customer may choose to also provide an aerial map or GPS coordinates for increased accuracy.

1.4.1.3 Meter number, pole number, or other equivalent information identifying proposed Point of Common Coupling, if available.

1.4.1.4 DER type(s) (e.g., solar, wind, combined heat and power, storage, solar + storage, etc.).

1.4.1.5 Nameplate Rating (alternating current kW).

1.4.1.6 Single or three phase DER configuration.

Updated by 10.23.26 Order

1.4.1.7 Stand-alone generator (no onsite load, not including station service – Yes or No?).

1.4.1.8 Is new service requested? Yes or No? If there is existing service, include the customer account number, site minimum and maximum current or proposed electric loads in kW (if available) and specify how the load is expected to change.

1.4.2 Using the information provided in the Pre-Application Report request form in section 1.4.1, the Area EPS Operator will identify the substation/area bus, bank or circuit likely to serve the proposed Point of Common Coupling. This selection by the Area EPS Operator does not necessarily indicate, after application of the screens and/or study, that this would be the circuit the project ultimately connects to. The Interconnection Customer must request additional Pre-Application Reports if information about multiple Points of Common Coupling is requested. Subject to 1.4.3, the Pre-Application Report will include the following information:

1.4.2.1 Total capacity (in megawatts (MW)) of substation/area bus, bank or circuit based on normal or operating ratings likely to serve the proposed Point of Common Coupling.

1.4.2.2 Existing aggregate generation capacity (in MW) interconnected to a substation/area bus, bank or circuit (i.e., amount of generation online) likely to serve the proposed Point of Common Coupling.

1.4.2.3 Aggregate queued generation capacity (in MW) for a substation/area bus, bank or circuit (i.e., amount of generation in the queue) likely to serve the proposed Point of Common Coupling.

1.4.2.4 Available capacity (in MW) of substation/area bus or bank and circuit likely to serve the proposed Point of Common Coupling (i.e., total capacity less the sum of existing aggregate generation capacity and aggregate queued generation capacity).

1.4.2.5 Substation nominal distribution voltage and/or transmission nominal voltage if applicable.

1.4.2.6 Nominal distribution circuit voltage at the proposed Point of Common Coupling.

1.4.2.7 Approximate circuit distance between the proposed Point of Common Coupling and the substation.

1.4.2.8 Relevant line section(s) actual or estimated peak load and minimum load data, including daytime minimum load as described in section 3.4.4.1 below and absolute minimum load, when available.

1.4.2.9 Whether the Point of Common Coupling is located behind a line voltage regulator.

1.4.2.10 Number and rating of protective devices and number and type (standard, bi-directional) of voltage regulating devices between the proposed Point of Common Coupling and the substation/area. Identify whether the substation has a load tap changer.

Updated by 10.25.26 Order

1.4.2.11 Number of phases available on the Area EPS medium voltage system at the proposed Point of Common Coupling. If a single phase, distance from the three-phase circuit.

1.4.2.12 Limiting conductor ratings from the proposed Point of Common Coupling to the distribution substation.

1.4.2.13 Whether the Point of Common Coupling is located on a spot network, grid network, or radial supply.

1.4.2.14 Based on the proposed Point of Common Coupling, existing or known constraints such as, but not limited to, electrical dependencies at that location, short circuit interrupting capacity issues, power quality or stability issues on the circuit, capacity constraints, or secondary networks.

1.4.3 The Pre-Application Report need only include existing data. A request for a Pre-Application Report does not obligate the Area EPS Operator to conduct a study or other analysis of the proposed DER in the event that data is not readily available. If the Area EPS Operator cannot complete all or some of a Pre-Application Report due to lack of available data, the Area EPS Operator shall provide the Interconnection Customer with a Pre-Application Report that includes the data that is available. The confidentiality provisions found in 5.9 apply to Pre-Application Reports.

1.4.4 The provision of information on "available capacity" pursuant to section 1.4.2.4 does not imply that an interconnection up to this level may be completed without impacts since there are many variables studied as part of the interconnection review process. The distribution system is dynamic and subject to change, and data provided in the Pre-Application Report may become outdated at the time of the submission of the complete Interconnection Application. Notwithstanding any of the provisions of this section, the Area EPS Operator shall, in good faith, include data in the Pre-Application Report that represents the best available information at the time of reporting.

1.5 Interconnection Application

1.5.1 The Interconnection Customer shall submit an Interconnection Application to the Area EPS Operator, together with the processing fee or deposit specified in the Interconnection Application. Additional fees or deposits for the interconnection process shall not be required, except as otherwise specified in these procedures. Application form templates are available in Attachment 2 Simplified Application Form and Attachment 3 Interconnection Application Form. The Area EPS Operator's tariff shall include specific fees for Simplified Process, Fast Track Process, and Study Process and Interconnection Ombudsperson Surcharge if applicable consistent with:

1.5.1.1 The processing fee for the Simplified Process Application shall be up to $100.

1.5.1.2 For certified, Fast Track Process eligible applications, the processing fee shall be up to $100 + $1/kW. For non-certified Fast Track Process eligible applications, the processing fee shall be up to $100 + $2/kW.

1.5.1.3 For an Interconnection Application that is not eligible or does not apply for Simplified Process or Fast Track Process, the processing fee shall be a down payment not to exceed $1,000 plus $2.00 per kW toward the deposit required for the study(s) under Section 4 Study Process.

Updated by 10.23.20 Order

1.5.1.4 Each Interconnection Application shall include the Interconnection Ombudsperson Surcharge, if applicable, as determined annually by the Commission.

1.5.1.5 Interconnection Applications shall contain a single line diagram and site diagram. A signature from a professional engineer licensed in Minnesota shall be required when: 1) Certified equipment with a Nameplate Rating greater than 250 kW; or 2) non-certified equipment with a Nameplate Rating greater than 50 kW.

1.5.2 The Interconnection Application shall be date- and time-stamped upon initial and, if necessary, resubmission receipt. Unless Section 2 Simplified Process applies, the Interconnection Customer shall be notified of receipt by the Area EPS Operator within three (3) Business Days of receiving the Interconnection Application. The Area EPS Operator shall notify the Interconnection Customer within ten (10) Business Days of the receipt of the Interconnection Application as to whether the Interconnection Application is complete or incomplete. If the Interconnection Application is incomplete, the Area EPS Operator shall provide along with the notice that the Interconnection Application is incomplete, a written list detailing all information that must be provided to complete the Interconnection Application. The Interconnection Customer will have ten (10) Business Days after receipt of the notice to submit all of the listed information. If the Interconnection Customer does not provide the listed information within the deadline the Interconnection Application will be deemed withdrawn. An Interconnection Application will be deemed complete upon submission of documents adhering to Minnesota Technical Requirements and containing the listed information to the Area EPS Operator. The Area EPS Operator will have five (5) Business Days to review the additional material and notify the Interconnection Customer if the Interconnection Application is deemed complete. The date-and time- stamp of receipt of a complete Interconnection Application shall be accepted as the qualifying date for the purposes of establishing queue position as described in section 1.8.

Application Path	**Notification of Application Receipt**	**Notification of Application Completeness**	**Notification of Interconnection Approval**
Simplified	3 days from filing	10 days from filing	20 days from receipt of complete application
Fast Track	3 days from filing	10 days from filing	25 days from receipt of complete application
Study Process	3 days from filing	10 days from filing to initiate scheduling of scoping meeting	Per study process time-lines

Note: Days are Business Days

1.6 Modification of the Interconnection Application or a DER Interconnection

1.6.1 At any time after an Interconnection Application is deemed complete, including after the receipt of Fast Track, supplemental review, system impact study, and/or facilities study results, the

Updated by 10.25.20 Order

Interconnection Customer, the Area EPS Operator, or the Affected System owner may identify modifications to the planned Interconnection that may improve the costs and benefits (including reliability) of the Interconnection, and/or the ability of the Area EPS Operator to accommodate the Interconnection. The Interconnection Customer shall submit to the Area EPS Operator, in writing, all proposed modifications to any information provided in the Interconnection Application. Neither the Area EPS Operator nor the Affected System operator may unilaterally modify the Interconnection Application.

1.6.2 Within ten (10) Business Days of receipt of a proposed modification, the Area EPS Operator shall evaluate whether a proposed modification to either an Interconnection Application or an existing DER Interconnection constitutes a Material Modification. If applicable, the Area EPS Operator shall make Reasonable Effort to consult with the Affected System owner. The definition in Glossary of Terms includes examples of what does and does not constitute a Material Modification.

1.6.2.1 If the proposed modification is determined to be a Material Modification, then the Area EPS Operator shall notify the Interconnection Customer in writing that the Customer may: 1) withdraw the proposed modification; or 2) proceed with a new Interconnection Application for such modification. The Interconnection Customer shall provide its determination in writing to the Area EPS Operator within ten (10) Business Days after being provided the Material Modification determination results. If the Interconnection Customer does not provide its determination, the Customer's Application shall be deemed withdrawn.

1.6.2.2 If the proposed modification is determined not to be a Material Modification, then the Area EPS Operator shall notify the Interconnection Customer in writing that the modification has been accepted and that the Interconnection Customer shall retain its eligibility for interconnection, including its place in the interconnection queue.

1.6.3 Any dispute as to the Area EPS Operator's determination that a modification constitutes a Material Modification shall proceed in accordance with the dispute resolution provisions in section 5.3 of these procedures.

1.6.4 Any modification to machine data, equipment configuration or to the interconnection site of the DER not agreed to in writing by the Area EPS Operator and the Interconnection Customer may be deemed a withdrawal of the Interconnection Application and may require submission of a new Interconnection Application, unless proper notification of each Party by the other as described in sections 1.6.1 and 1.6.2.

1.7 Site Control

Documentation of site control must be submitted with the Interconnection Application. Site control may be demonstrated through providing documentation showing any of the following:

1.7.1 Ownership of, a leasehold interest in, or a right to develop a site for the purpose of constructing the DER;

1.7.2 An option to purchase or acquire a leasehold site for such purpose; or

Updated by IP 2526 Order

1.7.3 An exclusivity or other business relationship between the Interconnection Customer and the entity having the right to sell, lease, or grant the Interconnection Customer the right to possess or occupy a site for such purpose; or

1.7.4 For DERs utilizing the Section 2 Simplified Process, proof of site control may be demonstrated by the site owner's signature on the Interconnection Application.

1.8 Queue Position

1.8.1 Queue Position is assigned by the Area EPS based on when the Interconnection Application is deemed complete as described in section 1.5.2. The Queue Position of each Interconnection Application will be used to determine the cost responsibility for the Upgrades necessary to accommodate the interconnection. The Queue Position also establishes conditional interconnection capacity for an Interconnection Customer, contingent upon all requirements of the MN DIP and MN Technical Requirements being met.

1.8.2 Subject to the provisions in sections 1.4.4, 1.6, and 1.7, the DER shall retain the Queue Position assigned to their Interconnection Application throughout the review process for the purpose of determining cost responsibility and conditional interconnection capacity, including when moving through the processes covered by Section 2 Simplified Process and Section 3 Fast Track Process. Failure by the Interconnection Customer to meet the time frames outlined in these procedures or request a timeline extension shall result in a withdrawal of the Interconnection Application. The Area EPS shall notify the Interconnection Customer of the missed time frame with an opportunity to request a timeline extension as defined in section 5.2.3 before the Interconnection Application is deemed withdrawn.

1.8.3 The Area EPS Operator shall maintain a single, administrative queue and may manage the queue by geographical region (i.e. feeder, substation, etc.) This administrative queue shall be used to address Interconnection Customer inquiries about the queue process. If the Area EPS Operator and the Interconnection Customer(s) agree, Interconnection Applications may be studied in clusters for the purpose of the system impact study; otherwise, they will be studied serially.

1.8.4 Each Area EPS Operator that has received at least forty (40) complete Interconnection Applications, including Simplified Process Applications, in a year shall maintain a public interconnection queue, available in a sortable spreadsheet format on its website, which it shall update on at least a monthly basis unless no changes to the spreadsheet have occurred in that month. The date of the most recent update shall be clearly indicated.

1.8.4.1 At a minimum, the following shall be included in the public interconnection queue:

Updated by 10.25.26 Order

1.8.4.1.1 Application or Queue Number

1.8.4.1.2 Date Application Deemed Complete

1.8.4.1.3 Interconnection Process Track (Simplified, Fast Track, or Study Process)

1.8.4.1.4 Proposed DER Nameplate Rating

1.8.4.1.5 Proposed DER Export Capacity (if limited as defined in 5.14.3)

1.8.4.1.6 DER type (technology)

1.8.4.1.7 Proposed DER Location by geographic region (i.e. by feeder or line section)

1.8.4.1.8 Status of the Application's progress through the process (e.g. Initial Review, Supplemental Review, Facilities Study, Construction, Inspection, etc.)

Section 2. Simplified Process

2.1 Applicability

2.1.1 For Certified, inverter-based DERs with a Nameplate Rating of 50 kW ac or less and an Export Capacity of 20 kW ac or less: The Area EPS Operator shall comport with the Simplified Process, including the time frames described in that process. Simplified Process eligibility does not imply or indicate that a DER will pass the Initial Review Screens, failure to pass the screens will route the application to the Fast Track Process.

2.1.2 Certified Equipment – UL 1741 listing is a common form of DER inverter certification. See Attachment 4: Certification Codes and Standards and Attachment 5: Certification of Distributed Energy Resource Equipment.

2.2 Simplified Process Application Review Process

2.2.1 The Interconnection Customer with an eligible DER shall complete the Simplified Process Application and submit it and the application processing fee to the Area EPS Operator. A Simplified Process Application template is provided in Attachment 2: Simplified Application Form.

2.2.2 Within ten (10) Business Days of receipt of the Simplified Process Application, the Area EPS Operator shall acknowledge to the Interconnection Customer receipt of the Simplified Application, evaluate the Simplified Process Application for completeness, and notify the Interconnection Customer whether the Simplified Process Application is or is not complete, and, if not, identify what material is missing. The Area EPS Operator shall to the best of its ability identify all missing material and other errors or omissions at this time. The Interconnection Customer shall submit any additional material within five (5) Business Days of the Area EPS Operator's notice. The Area EPS Operator shall have an additional five (5) Business Days to review the additional material and notify the Interconnection Customer that the Simplified Process Application is complete.

Updated by 10.23.26 Order

2.2.3 The Area EPS Operator shall determine if the DER can be interconnected safely and reliably using the Initial Review Screens contained in the Fast Track Process at 3.2.1, and without construction of facilities by the Area EPS Operator. The Area EPS Operator has twenty (20) Business Days from receipt of a complete Simplified Process Application to complete this process and inform the Interconnection Customer of the results.

Unless the Area EPS Operator determines and demonstrates that the DER cannot be interconnected safely and reliably or requires construction of facilities by the Area EPS Operator, the Area EPS Operator approves the Application and provides the Interconnection Customer an executable Uniform Statewide Contract or MN DIA within five (5) days as described in sections 1.1.5.1 and 5.1.1.

If the Area EPS Operator determines the DER can be connected safely and reliably only with construction of facilities by the Area EPS Operator, the Area EPS Operator shall follow the procedures set forth in Section 3.2.2.

If the Area EPS Operator does not or cannot determine that the DER may be interconnected safely and reliably unless the Interconnection Customer is willing to consider minor modifications or further study, the Area EPS Operator shall follow the procedures set forth in Section 3.2.3.

2.3 Simplified Interconnection

2.3.1 The Interconnection Customer shall sign and return the Interconnection Agreement within thirty (30) Business Days[5] or may request an extension as described in Section 5.12 and 5.2. The Interconnection Customer must submit to the Area EPS Operator either 1) a signed copy of the Uniform Statewide Contract, if applicable, which serves as both the power purchase agreement and Interconnection Agreement; or 2) the Interconnection Customer must submit a signed Uniform Statewide Contract, if applicable, and a separate MN DIA as described in section 1.1.5.

2.3.1.1 Upon receipt of the signed Interconnection Agreement, and then after fully executing it as provided for in Section 5.1.2, the Area EPS Operator shall schedule and execute appropriate construction of facilities, if necessary, which shall be completed prior to the Interconnection Customer returning the Certificate of Completion. If construction of facilities is required by the Area EPS Operator, the Area EPS Operator shall notify the customer upon completion of construction.

2.3.2 After installation, the Interconnection Customer returns the Certificate of Completion to the Area EPS Operator. Prior to parallel operation, and consistent with the MN DIP, the Area EPS Operator may inspect the DER for compliance with standards, which may include a witness test, and may schedule appropriate metering replacement, if necessary. The Area EPS Operator is obligated to complete the witness test, if required, within ten (10) Business Days of the receipt of the Certificate of Completion. If the Area EPS Operator does not inspect within ten (10) Business Days, the witness test is deemed waived.

2.3.3 Within three (3) Business Days of inspection or waiver of inspection, the Area EPS Operator shall notify the Interconnection Customer in writing that interconnection of the DER has permission to operate. If the witness test is not satisfactory, the Area EPS Operator has the right to disconnect

[5] The 30-day timeframe in this step originates from Section 5.1.2 and does not represent a new step or timeframe.

Updated by 10-23-20 Order

the DER. The Interconnection Customer has no right to operate in parallel, except for optional testing not to exceed two hours, until permission to operate is granted by the Area EPS Operator.

Section 3. Fast Track Process

3.1 Applicability

3.1.1 The Fast Track Process is available to an Interconnection Customer proposing to interconnect a DER with the Area EPS Operator's Distribution System if the DER Export Capacity does not exceed the size limits identified in this Section, including the table below and does not qualify for the Section 2 Simplified Process. Fast Track eligibility does not imply or indicate that a DER will pass the Fast Track Initial Review Screens in 3.2.1 or the Supplemental Review screens in 3.4 below.

Fast Track eligibility for DERs is determined based upon the DER type, the Export Capacity of the DER, voltage of the line, and the location of and the type of line at the Point of Common Coupling. All synchronous and induction machines must be no larger than 2 MW to be eligible for Fast Track Process consideration. The Fast Track Process size limits are included in the table below.

Fast Track Eligibility for Distributed Energy Resources		
Line Voltage	Export Capacity of DER Eligible for Fast Track [6] Regardless of Location	Export Capacity of certified, inverter-based DER on a Mainline[7] and ≤ 2.5 Electrical Circuit Miles from Substation[8] eligible for Fast Track
< 5 kV	≤ 500 kW	≤ 500 kW
≥ 5 kV and < 15 kV	≤ 1 MW	≤ 2 MW
≥ 15 kV and < 30 kV	≤ 3 MW	≤ 4 MW
≥ 30 kV and ≤ 69 kV	≤ 4 MW	≤ 5 MW

3.1.2 In addition to the size threshold, the Interconnection Customer's proposed DER must meet the codes, standards, and certification requirements of Attachment 4 and Attachment 5 of these procedures, or the Area EPS Operator has reviewed the design or tested the proposed DER and is satisfied that it is safe to operate.

3.2 Initial Review

Within 15 Business Days after the Area EPS Operator notifies the Interconnection Customer it has received a complete Interconnection Application, the Area EPS Operator shall perform an initial review using the screens set forth below, notify the Interconnection Customer of the results; including copies of the analysis and data underlying the Area EPS Operator's determinations under the screens.

Updated per 26 Order

[6] Synchronous and induction machines eligibility is limited to no more than 2MW Nameplate Rating even when line voltage is greater than 15 kV.

[7] For purposes of this table, a Mainline is the three-phase backbone of a circuit. It will typically constitute lines with wire sizes of 4/0 American wire gauge, 266 kcmil, 336.4 kcmil, 397.5 kcmil, 477 kcmil and 795 kcmil.

[8] An Interconnection Customer can determine this information about its proposed interconnection location in advance by requesting a pre-application report pursuant to section 1.4.

The technical screens listed in this section shall not preclude the Area EPS Operator from seeking approval of tools that perform screening functions using different methodology given that the analysis is aimed at preventing the same voltage, thermal and protection limitations as the initial and supplemental review screens described below.

3.2.1 Initial Review Screens

3.2.1.1 The proposed DER's Point of Common Coupling (PCC) must be on a portion of the Area EPS Operator's Distribution System.

3.2.1.2 For interconnection of a proposed DER to a radial distribution circuit, the Export Capacity of the proposed DER and the Export Capacity of any DER not reflected in minimum load, shall not exceed 100% of the line section's applicable historical minimum load calculated consistent with Section 3.4.4.1. When minimum load data is not available, the Area EPS Operator may consider 15% of the line section annual peak load instead. A line section is that portion of an Area EPS Operator's electric system connected to a customer bounded by automatic sectionalizing devices or the end of the distribution line.

3.2.1.3 For interconnection of a proposed DER that can introduce Inadvertent Export, where the Nameplate Rating minus the Export Capacity is greater than 250 kW, Inadvertent Export does not create unacceptable voltage changes per the following calculation. The difference of the Nameplate Rating current and the Export Capacity current of the proposed DER, at the medium voltage side of the PCC, divided by the feeder available short circuit capacity at the medium voltage (primary) level of the PCC, does not exceed 3%.

$$\frac{I_{DER\ Nameplate} - I_{DER\ Export}}{I_{Utility\ SC}} \leq 3\%$$

3.2.1.4 For interconnection of a proposed DER to the load side of network protectors, the proposed DER must utilize an inverter-based equipment package and, the Proposed DER's Nameplate Rating, together with the aggregated Nameplate Rating other inverter-based DERs, shall not exceed the smaller of 5% of a network's maximum load or 50 kW.[9]

3.2.1.5 The fault current of the proposed DER, in aggregation with the fault current of other DERs on the distribution circuit, shall not contribute more than 10% to the distribution circuit's maximum fault current at the point on the medium voltage (primary) level nearest the proposed Point of Common Coupling.

3.2.1.6 The fault current of the proposed DER in aggregate with the fault current of other Distributed Energy Resources on the distribution circuit, shall not cause any distribution protective devices and equipment (including, but not limited to, substation breakers, fuse cutouts, and line reclosers), or Interconnection Customer equipment on the system to exceed 87.5% of the short circuit interrupting capability; nor shall the interconnection be proposed for a circuit that already exceeds 87.5% of the short circuit interrupting capability.

Updated by 10.23.20 Order

[9] Network protectors are protective devices used on secondary networks (spot and grid networks) to automatically disconnect its associated transformer when reverse power flow occurs. Secondary networks are most often used in densely populated downtown areas.

3.2.1.7 Using the table below, determine the type of interconnection to a primary distribution line. This screen includes a review of the type of electrical service provided to the Interconnecting Customer, including line configuration and the transformer connection to limit the potential for creating over-voltages on the Area EPS Operator's electric power system due to a loss of ground during the operating time of any anti-islanding function.

Primary Distribution Line Type	**Type of Interconnection to Primary Distribution Line**	**Result/Criteria**
Three-phase, three wire	3-phase or single phase, phase-to-phase	Pass screen
Three-phase, four wire	Effectively-grounded 3 phase or Single-phase, line-to-neutral	Pass screen

3.2.1.8 If the proposed DER is located where existing voltage is 0.97pu or lower and to be interconnected on single-phase shared secondary, the aggregate Nameplate Rating on the shared secondary, including the proposed DER, shall not exceed 20 kW or 65% of the transformer nameplate rating.

3.2.1.9 The aggregate DER Export Capacity shall not exceed the transformer or secondary conductor ratings.

3.2.1.10 If the proposed DER is single-phase and is to be interconnected on a center tap neutral of a 240 volt service, its addition shall not create an imbalance between the two sides of the 240 volt service of more than 20% of the nameplate rating of the service transformer.

3.2.1.11 If the proposed DER is single-phase and is to be interconnected to a three-phase service, its Nameplate Rating shall not exceed 10% of the service transformer nameplate rating.

3.2.1.12 If the DER's Point of Common Coupling is behind a line voltage regulator[10], the DER's Nameplate Rating shall be less than 250 kW.

3.2.2 If the proposed interconnection passes the screens, or if the proposed interconnection fails the screens, but the Area EPS Operator determines that the DER may nevertheless be interconnected consistent with safety, reliability, and power quality standards, the Interconnection Application shall proceed as follows:

3.2.2.1 If the proposed interconnection requires no construction of facilities by the Area EPS Operator on its own system, the Area EPS Operator shall provide the Interconnection Customer an executed Interconnection Agreement within five (5) Business Days after the determination.

3.2.2.2 If the proposed interconnection requires construction of any facilities, the Area EPS Operator shall notify the Interconnection Customer of such requirement when it provides the Initial Review results and copies of the analysis and data underlying the Area EPS Operator's determinations under the screens and either: 1) provide a good faith cost estimate; or 2) require a facilities study pursuant to 4.4.1. Within five (5) Business Days, the Interconnection Customer

[10] This screen does not include substation voltage regulators.

Updated by 10.23.26 Order

shall inform the Area EPS Operator if the Interconnection Customer elects to proceed with the proposed interconnection. If the Interconnection Customer makes such an election, the Area EPS Operator shall either provide: i) an Interconnection Agreement, along with a non-binding good faith cost estimate and construction schedule for such upgrades, within twenty (20) Business Days after the Area EPS Operator receives such an election or ii) a facilities study agreement pursuant to section 4.4.

3.2.3 If the proposed interconnection fails the screens, and the Area EPS Operator does not or cannot determine from the Initial Review that the DER may nevertheless be interconnected consistent with safety, reliability, and power quality standards unless the Interconnection Customer is willing to consider minor modifications or further study, the Area EPS Operator shall provide the Interconnection Customer the opportunity to attend a customer options meeting.

3.3 Customer Options Meeting

If the Area EPS Operator determines the Interconnection Application cannot be approved without either 1) supplemental review, other additional studies or actions; or 2) incurring significant cost to address safety, reliability, or power quality problems, the Area EPS Operator shall notify the Interconnection Customer of that determination and provide copies of all directly pertinent data and analyses underlying its conclusion, subject to confidentiality provisions in Section 5.9 and where applicable limited by privacy rules. Within ten (10) Business Days of the Area EPS Operator's determination, unless mutual agreement, the Area EPS Operator and Interconnection Customer shall schedule a customer options meeting with the Interconnection Customer to review possible facility modifications, screen analysis and related results to determine what further steps are needed to permit the DER to be connected safely and reliably. At the time of notification of the Area EPS Operator's determination, or at the customer options meeting, the Area EPS Operator shall

3.3.1 Offer to perform a supplemental review in accordance with section 3.4 and provide a non-binding good faith estimate of the costs of such review; or

3.3.2 Obtain the Interconnection Customer's agreement to continue evaluating the Interconnection Application under the Section 4 Study Process.

3.4 Supplemental Review

3.4.1 To accept the offer of a supplemental review, the Interconnection Customer shall agree in writing and submit a deposit for the estimated costs of the supplemental review in the amount of the Area EPS Operator's good faith estimate of the costs of such review, both within fifteen (15) Business Days of the offer. If the written agreement and deposit have not been received by the Area EPS Operator within that timeframe, the Interconnection Application shall continue to be evaluated under the Section 4 Study Process unless it is withdrawn by the Interconnection Customer.

3.4.2 The Interconnection Customer may specify with the written agreement and deposit the order in which the Area EPS Operator will complete the supplemental review screens. The order specified shall be at the level of sections 3.4.4.1, 3.4.4.2, 3.4.4.3, 3.4.4.4, and 3.4.4.5.

3.4.3 The Interconnection Customer shall be responsible for the Area EPS Operator's actual costs for conducting the supplemental review. The Interconnection Customer shall pay any review costs that exceed the deposit within twenty (20) Business Days of receipt of the invoice or resolution of any dispute. If the deposit exceeds the invoiced costs, the Area EPS Operator will return such excess within twenty (20) Business Days of the invoice without interest.

Updated by 10-23-20 Order

3.4.4 Within thirty (30) Business Days following receipt of the deposit for a supplemental review, the Area EPS Operator shall: 1) perform a supplemental review using the screens set forth below; 2) notify in writing the Interconnection Customer of the results; and 3) include with the notification copies of the analysis and data underlying the Area EPS Operator's determinations under the screens. Unless the Interconnection Customer provided instructions for how to respond to the failure of any of the supplemental review screens below at the time the Interconnection Customer accepted the offer of supplemental review, the Area EPS Operator shall notify the Interconnection Customer following the failure of any of the screens, or if it is unable to perform the screen in this section within two (2) Business Days of making such determination to obtain the Interconnection Customer's permission to: 1) continue evaluating the proposed interconnection under this section 3.4.4; 2) terminate the supplemental review and continue evaluating the DER under Section 4 Study Process; or 3) terminate the supplemental review upon withdrawal of the Interconnection Application by the Interconnection Customer. The Interconnection Customer shall respond with its choice within five (5) Business Days of notification from the Area EPS Operator.

3.4.4.1 Minimum Load Screen: Where 12 months of line section minimum load data (including onsite load but not station service load served by the proposed DER) are available, can be calculated, can be estimated from existing data, or determined from a power flow model, the aggregate DER Export Capacity on the line section is less than 100% of the minimum load for all line sections bounded by automatic sectionalizing devices upstream of the proposed DER. If minimum load data is not available, or cannot be calculated, estimated or determined, the Area EPS Operator shall include the reason(s) that it is unable to calculate, estimate or determine minimum load in its supplemental review results notification under section 3.4.4.

3.4.4.1.1 The type of generation used by the proposed DER will be taken into account when calculating, estimating, or determining circuit or line section minimum load relevant for the application of screen 3.4.4.1. Solar photovoltaic (PV) generation systems with no battery storage use daytime minimum load (i.e., 10 a.m. to 4 p.m. for fixed panel systems and 8 a.m. to 6 p.m. for PV systems utilizing tracking systems), while all other generation uses absolute minimum load.

3.4.4.1.2 When this screen is being applied to a DER that serves some station service load, only the net injection into the Area EPS Operator's electric system will be considered as part of the aggregate generation.

3.4.4.1.3 Area EPS Operator will not consider as part of the aggregate Export Capacity for purposes of this screen DER capacity known to be already reflected in the minimum load data.

3.4.4.2 Voltage and Power Quality Screen: In aggregate with existing generation on the line section: (1) the voltage regulation on the line section can be maintained in compliance with relevant requirements under all system conditions; (2) the voltage fluctuation is within acceptable limits as defined by Institute of Electrical and Electronics Engineers (IEEE) Standard 1453, or utility practice similar to IEEE Standard 1453; and (3) the harmonic levels meet IEEE Standard 519 limits. If the DER limits export pursuant to 5.14.3, the Export Capacity shall be included in any analysis including power flow simulations.

Updated by 10.23.26 Order

3.4.4.3 Inadvertent Export Rapid Voltage Change Screen[11]: For interconnection of a proposed DER that can introduce Inadvertent Export, where the Nameplate Rating minus the Export Capacity is greater than 250 kW, the following screen is required. With a power change equal to the Nameplate Rating minus the Export Capacity, the change in voltage at the point on the medium voltage (primary) level nearest the PCC does not exceed 3%. Voltage change will be estimated applying the following formula:

Formula	$\frac{(R_{SOURCE} \times \Delta \boldsymbol{P}) - (X_{SOURCE} \times \Delta \boldsymbol{Q})}{V^2}$
Where: $\Delta \boldsymbol{P}$ = (DER apparent power Nameplate Rating – Export Capacity) × PF, $\Delta \boldsymbol{Q}$ = (DER apparent power Nameplate Rating – Export Capacity) × $\sqrt{(\boldsymbol{1 - PF^2})}$, R_{SOURCE} is the grid resistance, X_{SOURCE} is the grid reactance, V is the grid voltage, PF is the power factor	

3.4.4.4 Safety and Reliability Screen: The location of the proposed DER and the aggregate Export Capacity on the line section do not create impacts to safety or reliability that cannot be adequately addressed without application of the Study Process. If the DER limits export pursuant to 5.14.3, the Export Capacity shall be included in any analysis including power flow simulations, except when assessing fault current contribution. To assess fault current contribution, the analysis shall use the rated fault current; for example, the Interconnection Customer may provide manufacturer test data (pursuant to the fault current test described in IEEE 1547.1-2020 clause 5.18) showing that the fault current is independent of the Nameplate Rating. The Area EPS Operator shall give due consideration to the following and other factors in determining potential impacts to safety and reliability in applying this screen.

Updated by 10.03.22 order

[11] This screen was first published and is described in the *Toolkit & Guidance for the Interconnection of Energy Storage & Solar-Plus-Storage* (March 2022), https://irecusa.org/resources/toolkit-and-guidance-for-the-interconnection-of-energy-storage-and-solar-plus-storage/.

3.4.4.4.1 Whether the line section has significant minimum loading levels dominated by a small number of customers (e.g., several large commercial customers).

3.4.4.4.2 Whether the loading along the line section is uniform or even.

3.4.4.4.3 Whether the proposed DER is located in close proximity to the substation (i.e., less than 2.5 electrical circuit miles), and whether the line section from the substation to the Point of Common Coupling is a Main line rated for normal and emergency ampacity.

3.4.4.4.4 Whether the proposed DER incorporates a time delay function to prevent reconnection of the generator to the system until system voltage and frequency are within normal limits for a prescribed time.

3.4.4.4.5 Whether operational flexibility is reduced by the proposed DER, such that transfer of the line section(s) of the DER to a neighboring distribution circuit/substation may trigger overloads or voltage issues.

3.4.4.4.6 Whether the proposed DER employs equipment or systems certified by a recognized standards organization to address technical issues such as, but not limited to, islanding, reverse power flow, or voltage quality.

3.4.4.5 Unintentional Islanding and Reverse Power Screen: the Area EPS Operator shall give due consideration to the following assessments to identify any system impacts or potential safety risks related to unintentional islanding and / or the effects of reverse power flows on the system through the application of this screen.

3.4.4.5.1 Whether synchronous Distributed Energy Resources are interconnected to the same circuit and what islanding protection schemes are proposed or currently exist.

3.4.4.5.2 Whether the proposed Distributed Energy Resource includes protection that addresses unintentional islanding or equivalent functionality as deemed appropriate by the Area EPS Operator.

3.4.4.5.3 Whether the impact of reverse power flows on the existing grid infrastructure negatively affects its ability to operate safely and reliably with active cogeneration and bi-directional power flows.

3.4.5 If the proposed interconnection passes the supplemental screens in sections 3.4.4.1, 3.4.4.2, 3.4.4.3, 3.4.4.4, and 3.4.4.5 above, or if the proposed interconnection fails the screens, but the Area EPS Operator determines that the DER may nevertheless be interconnected consistent with safety, reliability, and power quality standards, the interconnection shall proceed as follows:

3.4.5.1 If the proposed interconnection passes the supplemental screens in sections 3.4.4.1, 3.4.4.2, 3.4.4.3, 3.4.4.4, and 3.4.4.5 above and does not require construction of facilities by the Area EPS Operator on its own system, the Area

Updated by 19-250 Order

EPS Operator shall provide the Interconnection Customer an executable Interconnection Agreement within five (5) Business Days.

3.4.5.2 If the proposed interconnection requires construction of any facilities, the Area EPS Operator shall notify the Interconnection Customer of such requirement when it provides the supplemental review results and either: 1) provide a good faith cost estimate; or 2) require a facilities study pursuant to 4.4.1. Within five (5) Business Days, the Interconnection Customer shall inform the Area EPS Operator if the Interconnection Customer elects to proceed with the proposed interconnection. If the Interconnection Customer makes such an election within twenty (20) business days, the Area EPS Operator shall either provide: i) an Interconnection Agreement, along with a non-binding good faith cost estimate and construction schedule for such upgrades, or ii) a facilities study agreement pursuant to section 4.4.

3.4.6 If the proposed interconnection fails the screens, and the Area EPS Operator does not or cannot determine that the DER may nevertheless be interconnected consistent with safety, reliability, and power quality standards unless the Interconnection Customer is willing to consider minor modifications or further study, the Area EPS Operator shall provide the Interconnection Customer the option of commencing the Section 4 Study Process. If the Interconnection Customer wishes to proceed it shall notify the Area EPS Operator within fifteen (15) Business Days to retain its queue position.

Section 4. Study Process

4.1 Applicability

The Study Process shall be used by an Interconnection Customer proposing to interconnect its DER with the Area EPS Operator's Distribution System if the DER 1) is not eligible for Section 2 Simplified Process review or Section 3 Fast Track Process review, or 2) did not pass the Fast Track Process or the Simplified Process. The application fee described in section 1.5.1.3 shall be applied to the application completeness review costs and the first deposit required in this section.

4.2 Scoping Meeting

4.2.1 A scoping meeting shall be held within ten (10) Business Days after the Interconnection Application is deemed complete or, if applicable, the Fast Track Process or Simplified Process has been completed and the Interconnection Customer has elected to continue with the Study Process, or as mutually agreed to by the Parties. The Area EPS Operator and the Interconnection Customer will bring to the meeting personnel, including system engineers and other resources, as may be reasonably required to accomplish the purpose of the meeting.

4.2.2 The purpose of the scoping meeting is to discuss the Interconnection Application and review existing study results and relevant underlying data and assumptions relevant to the Interconnection Application. The Parties shall further discuss whether the Area EPS Operator should perform a system impact study or studies, or proceed directly to a facilities study or an Interconnection Agreement. If the Area EPS Operator determines there is no potential for Transmission System or Distribution System adverse system impacts, the Interconnection Application shall proceed directly to a facilities study or an executable Interconnection Agreement, as agreed to by the Parties.

4.2.3 The scoping meeting may be omitted by mutual agreement.

Updated by 10.23.16 Order

4.3 System Impact Study

4.3.1 A system impact study shall identify and detail the electric system impacts that would result if the proposed DER(s) were interconnected without project modifications or electric system modifications, and to study potential impacts, including but not limited to those identified in the scoping meeting. A system impact study shall evaluate the impact of the proposed interconnection on the reliability of the electric system.

The system impact study shall take into account the proposed DER's design and operating characteristics, and study the project according to how the project is proposed to be operated. If the DER limits export pursuant to 5.14.3, the system impact study shall use Export Capacity instead of the Nameplate Rating, except when assessing fault current contribution or Inadvertent Export. To assess fault current contribution, the system impact study shall use the rated fault current; for example, the Customer may provide manufacturer test data (pursuant to the fault current test described in IEEE 1547.1-2020 clause 5.18) showing that the fault current is independent of the Nameplate Rating.

If the study described above shows the need for upgrades, the Area EPS Operator may perform additional studies to identify mutually beneficial alternatives to the operating characteristics of the proposed DER(s).

4.3.2 If the Parties agree at the scoping meeting that a system impact study should be performed, the Area EPS Operator shall provide the Interconnection Customer, as soon as possible, but not later than five (5) Business Days after the scoping meeting, a system impact study agreement as defined in 4.4.3.

If the scoping meeting is omitted by mutual agreement or, if applicable, the Simplified Process or Fast Track Process has been completed and the Interconnection Customer has elected to continue with the Study Process, and a system impact study is required, the Area EPS Operator shall provide the Interconnection Customer a system impact study agreement within ten (10) Business Days.

4.3.3 The system impact study agreement (Attachment 6) shall include an outline of the scope of the study and a non-binding good faith estimate of the cost to perform the study. If applicable, the agreement shall list any additional and reasonable technical data on the DER needed to perform the system impact study. The scope of and cost responsibilities for a system impact study are described in the attached system impact study agreement. A deposit of the good faith estimated costs for each system impact study shall be provided by the Interconnection Customer when it returns the study agreements. The additional and reasonable technical data, if applicable, shall be returned with the system impact agreement. Upon Interconnection Customer request, the Area EPS Operator shall grant a time frame extension as described in 5.2.3 if additional technical data is requested.

4.3.4 In order to remain in consideration for interconnection, an Interconnection Customer who has requested a System Impact Study must return the executed system impact study agreement and pay the required study deposit within twenty (20) Business Days.

4.3.5 A System Impact Study shall be completed within thirty (30) Business Days after the system impact study agreement is signed by the Parties and delivered with deposit to the Area EPS Operator. The results and, if necessary, facilities study agreement shall be delivered to the Interconnection Customer within five (5) Business Days of completion of the System Impact Study. Upon request, the Area EPS Operator shall provide Interconnection Customer supporting

Updated by 10.23.26 Order

documentation and workpapers developed in the preparation of the system impact study, subject to confidentiality arrangements consistent with these procedures and the System Impact Study agreement.

4.3.6 In instances where the System Impact Study shows potential for Transmission System adverse system impacts, within five (5) Business Days following the identification of such impacts by the Area EPS Operator, the Area EPS Operator shall coordinate with the appropriate Transmission Provider to have the necessary studies completed to determine if the DER causes any adverse transmission impacts.

4.3.7 In order to remain in consideration for interconnection, an Interconnection Customer must return the executed Transmission System impact study agreement within fifteen (15) Business Days.

4.3.8 A Transmission System impact study, if required, shall be completed and the results transmitted to the Interconnection Customer in as timely a manner as possible after the transmission system impact study agreement is signed by the Parties. The Area EPS Operator shall be responsible for coordination with the Transmission Provider as needed. Affected Systems shall participate in the study and provide all information necessary to prepare the study.

4.4 Facilities Study

4.4.1 If construction of facilities is required, a facilities study may be necessary to specify and estimate the cost of the equipment, engineering, procurement and construction work identified in Initial Review, Supplemental Review, or the Study Process to provide interconnection and interoperability of the DER with the Area EPS Operator's Distribution System as required by Minnesota Technical Requirements. Interconnection Applications reviewed in the Simplified Process and Fast Track Process that require construction of facilities may be eligible, upon determination of the Area EPS Operator, to forego a facilities study as described in section 3.2.2.2.

The Area EPS Operator shall provide the Interconnection Customer a facilities study agreement in tandem with the results of the Interconnection Customer's system impact study or, if required, Transmission System impact study.

If no system impact study is required, but a facilities study is required, then the Area EPS Operator shall provide as soon as possible, but not later than five (5) Business Days after the scoping meeting, a facilities study agreement.

If the scoping meeting is omitted by mutual agreement and no system impact study is required, but a facilities study is required, the Area EPS Operator shall provide the Interconnection Customer a facilities study agreement within ten (10) Business Days after the Interconnection Application is deemed complete and, if applicable, the Simplified Process or Fast Track Process has been completed.

4.4.2 The facilities study agreement (Attachment 7) shall be accompanied by an outline of the scope of the study and a non-binding good faith estimate of the cost to perform the facilities study. The scope of and cost responsibilities for the facilities study are described in the attached facilities study agreement. A deposit of the good faith estimated costs for the facilities study shall be provided by the Interconnection Customer at the time it returns the study agreement.

Updated by 10-23-26 Order

4.4.3 In order to remain under consideration for interconnection, the Interconnection Customer must return the executed facilities study agreement and pay the required study deposit within fifteen (15) Business Days.

4.4.4 The facilities study shall specify and estimate the cost of the equipment, engineering, procurement and construction work (including overheads) needed to implement the conclusions of the system impact study(s).

4.4.5 Design for any required Interconnection Facilities and/or Upgrades shall be performed under the Facilities Study Agreement unless the Interconnection Application is processed under the provisions of section 3.2.2.2. However, in the event that the Interconnection Customer did not provide to the Area EPS Operator all required Conditional Use Permits at the time of entering into the Facilities Study Agreement, any such Design and/or Upgrades by the Area EPS Operator may be delayed until after the Interconnection Customer has provided to the Area EPS Operator all required Conditional Use Permits or provided a final design. The information in the Conditional Use Permits, or changes to the design, may result in significant modifications to the planned design and/or Upgrades. The Interconnection Customer may send to the Area EPS Operator a redacted version of the Conditional Use Permit to ensure confidentiality, but any and all information that the Area EPS Operator would reasonably need to perform an accurate Facilities Study shall not be redacted. If necessary to comply with these requirements, a confidential version of the Conditional Use Permit may be provided to the Area EPS Operator, with the confidential information being clearly marked and subject to the Confidentiality provisions in 5.9. The Area EPS Operator may contract with consultants to perform activities required under the facilities study agreement. The Interconnection Customer and the Area EPS Operator may agree to allow the Interconnection Customer to separately arrange for the design of some of the Interconnection Facilities. In such cases, facilities design will be reviewed and/or modified prior to acceptance by the Area EPS Operator, under the provisions of the Facilities Study Agreement. If the Parties agree to separately arrange for design and construction, and provided security and confidentiality requirements can be met, the Area EPS Operator shall make sufficient information available to the Interconnection Customer in accordance with confidentiality and critical infrastructure requirements to permit the Interconnection Customer to obtain an independent design and cost estimate for any necessary facilities.

4.4.6 In cases where Upgrades are required, the facilities study must be completed within forty-five (45) Business Days of the receipt of the executed facilities study agreement and deposit.

4.4.7 In cases where no Upgrades are necessary, and the required facilities are limited to Interconnection Facilities, the facilities study must be completed within thirty (30) Business Days of the receipt of the executed facilities study agreement and deposit.

4.4.8 Once the facilities study is completed, a draft facilities study report shall be prepared and transmitted to the Interconnection Customer. Upon request, the Area EPS Operator shall provide Interconnection Customer supporting documentation and workpapers developed in the preparation of the Interconnection Facilities Study, subject to confidentiality arrangements consistent with these procedures and the facilities study agreement.

4.4.9 Within ten (10) Business Days of providing a draft facilities study report to Interconnection Customer, the Area EPS Operator and Interconnection Customer shall meet to discuss the results of the facilities study unless the meeting is omitted by mutual agreement.

Updated by 10.26.20 Order

4.4.10 Interconnection Customer may, within twenty (20) Business Days after receipt of the draft report, provide written comments to the Area EPS Operator, which the Area EPS Operator shall address in the final report.

4.4.11 The Area EPS Operator shall issue the final facilities study report within fifteen (15) Business Days of receiving Interconnection Customer's comments or promptly upon receiving Interconnection Customer's statement that it will not provide comments. The Area EPS Operator may reasonably extend the time frame upon notice to the Interconnection Customer if the Interconnection Customer's comments require additional analyses or lead to significant modifications by the Area EPS Operator prior to issuance of the final facilities study report.

Section 5. Provisions that Apply to All Interconnection Applications

5.1 Interconnection Agreement

5.1.1 The Area EPS Operator shall provide the Interconnection Customer an executable Interconnection Agreement as described in section 1.1.5 within five (5) Business Days after the completion of all required review or study of the Interconnection Application unless sections 3.2.2.2, 3.4.5.1, 3.4.5.2 or 4.2.2 applies.

5.1.2 After receiving an Interconnection Agreement from the Area EPS Operator, the Interconnection Customer shall have thirty (30) Business Days to sign and return the interconnection agreement. If the Interconnection Customer does not sign the interconnection agreement, request an extension pursuant to these procedures, or ask the Area EPS Operator to file an unexecuted Interconnection Agreement with the Commission within thirty (30) Business Days, the Interconnection Application shall be deemed withdrawn. The Area EPS Operator shall provide the Interconnection Customer a fully executed Interconnection Agreement within five (5) Business Days after receiving a signed interconnection agreement from the Interconnection Customer. After the Interconnection Agreement is signed by the Parties, the interconnection of the DER shall proceed under the provisions of the Interconnection Agreement, except to the extent these procedures remain applicable, including, but not limited to, sections 5.5, 5.6, and 5.7.

5.2 Time Frames and Extensions

5.2.1 Response or Action Timeframes: Unless otherwise stated, all time frames are measured in Business Days. For purposes of measuring these time intervals and consistent with Minn. Stat. §645.15, the time shall be computed so as to exclude the first and include the last day of the prescribed or fixed period or duration of time. Any communication sent or received after 4:30 p.m. (local time in Saint Paul, Minnesota) or on a Saturday, Sunday, or Holiday shall be considered to have been sent on the next Business Day.

5.2.2 The Area EPS Operator shall make Reasonable Efforts to meet all time frames provided in these procedures. If the Area EPS Operator cannot meet a deadline provided herein, it must notify the Interconnection Customer in writing within three (3) Business Days after the deadline to explain the reason for the failure to meet the deadline, and provide an estimated time by which it will complete the applicable interconnection procedure in the process.

5.2.3 For applicable time frames described in these procedures, the Interconnection Customer may request in writing one extension equivalent to half of the time originally allotted (e.g., ten (10) Business Days for a twenty (20) Business Days original time frame) which the Area EPS Operator may not unreasonably refuse. No further extensions for the applicable time frame shall be granted absent a Force Majeure Event or other similarly extraordinary circumstances.

Updated by 10-9-26 Order

5.3 Disputes

5.3.1 The Parties agree to attempt to resolve all disputes arising out of the interconnection process and associated study and Interconnection Agreements according to the provisions of this article and Minnesota Administrative Rules 7829.1500-7829.1900. More information on the Commission's Consumer Affairs Office dispute resolution services is available on the Commission's website: https://mn.gov/puc/consumers/help/complaint/.

5.3.2 Prior to a written Notice of Dispute, the Party shall contact the other Party and raise the issue and the relief sought in an attempt to resolve the issue immediately.

5.3.3 In the event of a dispute, the disputing Party shall provide the other Party a written Notice of Dispute containing the relevant known facts pertaining to the dispute, the specific dispute and the relief sought, and express notice by the disputing Party that it is invoking the procedures under this article. The Interconnection Customer may utilize the Commission's Consumer Affairs Office's complaint/inquiry form and Informal Complaint dispute resolution process to assist with the written Notice of Dispute. The notice shall be sent to the non-disputing Party's email address and physical address set forth in the Interconnection Agreement or Interconnection Application, if there is no Interconnection Agreement. If the Interconnection Customer chooses not to utilize the Commission's Consumer Affair Office dispute resolution process, the Interconnection Customer shall provide an informational electronic copy of the Notice of Dispute to the Consumer Affairs Office at the Commission at consumer.puc@state.mn.us.

5.3.4 The non-disputing Party shall acknowledge the notice within three (3) Business Days of its receipt and identify a representative with the authority to make decisions for the non-disputing Party with respect to the dispute.

5.3.5 The non-disputing Party shall provide the disputing Party with relevant regulatory and/or technical details and analysis regarding the Area EPS Operator interconnection requirements under dispute within ten (10) Business Days of the date of the Notice of Dispute. Within twenty (20) Business Days of the date of the Notice of Dispute, the Parties' authorized representatives will be required to meet and confer to try to resolve the dispute. Parties shall operate in good faith and use best efforts to resolve the dispute.

5.3.6 If a resolution is not reached in the thirty (30) Business Days from the date of the notice described in section 5.3.3, the Parties may 1) if mutually agreed, continue negotiations for up to an additional twenty (20) Business Days; or 2) either Party may request the Commission's Consumer Affairs Office provide mediation in an attempt to resolve the dispute within twenty (20) Business Days with the opportunity to extend this timeline upon mutual agreement. Alternatively, both Parties by mutual agreement may request mediation from an outside third-party mediator with costs to be shared equally between the Parties.

5.3.7 If the results of the mediation are not accepted by one or more Parties and there is still disagreement, the dispute shall proceed to the Commission's Formal Complaint process as described in Minn. Rules 7829.1700-1900 unless mutually agreed to continue with informal dispute resolution.

5.3.8 At any time, either Party may file a complaint before the Commission pursuant to Minn. Stat. §216B.164, if applicable, and Commission rules outlined in Minn. Rules Ch. 7829.

5.4 Interconnection Metering

Updated by 10.23.25 Order

Any metering requirements necessitated by the use of the DER shall be installed at the Interconnection Customer's expense. The Interconnection Customer is responsible for replacement meter costs not covered in the Interconnection Customer's general customer charge. The Area EPS Operator may charge Interconnection Customers an ongoing metering-related charge for an estimate of ongoing metering-related costs specifically demonstrated and approved in tariff regardless of the choice of meter payment. The Area EPS Operator shall offer the Interconnection Customer the following payment options.

5.4.1 Pay upfront the cost of metering requirements for the DER. Any maintenance or replacement costs may be billed separately to the Interconnection Customer after these costs are incurred.

5.4.2 Pay a tariffed monthly charge for the actual, DER-related meter and metering-related costs. If no tariffed monthly charge is an exact match, then the closest applicable tariffed monthly charge shall apply; unless metering requirements are so different that individual case basis pricing should apply.

5.5 Non-Warranty

The Area EPS Operator does not give any warranty, expressed or implied, as to the adequacy, safety, or other characteristics of any structures, equipment, wires, appliances or devices owned, operated, installed or maintained by the Interconnection Customer, including without limitation the DER and any structures, equipment, wires, appliances or devices not owned, operated or maintained by the Area EPS Operator.

5.6 Design, Procurement, Installation and Construction of Interconnection Facilities and Upgrades

5.6.1 The Interconnection Customer shall pay for the actual cost of the Interconnection Facilities and Distribution Upgrades as described and itemized pursuant to the Interconnection Agreement and its attachments. If Network Upgrades are required, the actual cost of the Network Upgrades, including overheads, shall be borne by the Interconnection Customer pursuant to the Transmission Provider and associated agreement(s). As indicated in the Interconnection Agreement, the Area EPS Operator shall provide a good faith cost estimate, including overheads, for the purchase and construction of the Interconnection Facilities, Distribution Upgrades, and Network Upgrades, and provide a detailed itemization of such costs.

5.6.2 The Interconnection Customer and the Area EPS Operator shall agree on milestones for which each Party is responsible and list them in an attachment to the Interconnection Agreement. To the greatest extent possible, the Parties will identify all design, procurement, installation and construction requirements associated with a project, and clear associated timelines, at the beginning of the design, procurement, installation and construction phase, or as early within the process as possible.

5.6.3 A Party's obligations under this provision may be extended by agreement. If a Party anticipates that it will be unable to meet a milestone for any reason other than a Force Majeure Event, it shall immediately notify the other Party of the reason(s) for not meeting the milestone and 1) propose the earliest reasonable alternate date by which it can attain this and future milestones, and 2) request appropriate amendments to the Interconnection Agreement and its attachments. The Party affected by the failure to meet a milestone shall not unreasonably withhold agreement to such an amendment unless 1) it will suffer significant uncompensated economic or operational harm from the delay, 2) attainment of the same milestone has previously been delayed, or 3) it has reason to believe that the delay in meeting the milestone is intentional or unwarranted notwithstanding the circumstances explained by the Party proposing the amendment. If the Party affected by the failure to meet a milestone disputes the proposed extension, the affected Party may pursue dispute resolution pursuant to 5.3.

Updated by 10.23.26 Order

5.6.4 At the option of the Area EPS Operator, either the "Traditional Security" or the "Modified Security" method shall be used.

5.6.4.1 Under the Traditional Security method, the Interconnection Customer shall provide reasonable adequate assurances of credit, including a letter of credit or personal guaranty of payment and performance from a creditworthy entity acceptable under the Area EPS Operator credit policy and procedures for the unpaid balance of the estimated amount shown in Interconnection Agreement for the totality of all anticipated work or expense incurred by the Area EPS Operator associated with the Interconnection Application. The payment for these estimated costs shall be as follows:

5.6.4.1.1 1/3 of estimated costs shall be due no later than when the Interconnection Customer signs the Interconnection Agreement.

5.6.4.1.2 An additional 1/3 of estimated costs shall be due prior to initial energization of the Generation System with the Area EPS Operator.

5.6.4.1.3 Remainder of actual costs, incurred by Area EPS Operator, shall be due within 30 days from the date the bill is mailed by the Area EPS Operator after project completion.

5.6.4.2 Under the Modified Security method, at least twenty (20) Business Days prior to the commencement of the design, procurement, installation, or construction of a discrete portion of the Area EPS Operator's Interconnection Facilities and Upgrades, the Interconnection Customer shall provide the Area EPS Operator, at the Interconnection Customer's option, a guarantee, letter of credit or other form of security that is reasonably acceptable to the Area EPS Operator and is consistent with the Minnesota Uniform Commercial Code. Such security for payment shall be in an amount sufficient to cover the costs for constructing, designing, procuring, and installing the applicable portion of the Area EPS Operator's Interconnection Facilities and Upgrades and shall be reduced on a dollar-for-dollar basis for payments made to the Area EPS Operator under the Interconnection Agreement during its term.

5.6.4.3 The guarantee must be made by an entity that meets the creditworthiness requirements of the Area EPS Operator, and contain terms and conditions that guarantee payment of any amount that may be due from the Interconnection Customer, up to an agreed-to maximum amount.

5.6.4.4 The letter of credit must be issued by a financial institution or insurer reasonably acceptable to the Area EPS Operator and must specify a reasonable expiration date not sooner than sixty (60) Business Days (three calendar months) after the due date of the final accounting report and bill described in 5.6.6.

5.6.5 The Area EPS Operator shall bill the Interconnection Customer for the design, engineering, construction, and procurement costs of Interconnection Facilities and Upgrades described in the Interconnection Agreement on a monthly basis, or as otherwise agreed by the Parties in the interconnection agreement. The Interconnection Customer shall pay each bill within twenty-one (21) Business Days of receipt, or as otherwise agreed to by the Parties in the interconnection agreement.

Updated IX.10.23.25 Order

5.6.6 Within eighty (80) Business Days (approximately four (4) calendar months) of completing the construction and installation of the Area EPS Operator's Interconnection Facilities and/or Upgrades described in the interconnection agreement and its attachments, the Area EPS Operator shall provide the Interconnection Customer with a final accounting report of any difference between 1) the Interconnection Customer's cost responsibility for the actual cost of such facilities or Upgrades, and 2) the Interconnection Customer's previous aggregate payments to the Area EPS Operator for such facilities or Upgrades. If the Interconnection Customer's cost responsibility exceeds its previous aggregate payments, the Area EPS Operator shall invoice the Interconnection Customer for the amount due and the Interconnection Customer shall make payment to the Area EPS Operator within twenty (20) Business Days. If the Interconnection Customer's previous aggregate payments exceed its cost responsibility under the Interconnection Agreement, the Area EPS Operator shall refund to the Interconnection Customer an amount equal to the difference within twenty (20) Business Days of the final accounting report.

5.7 Inspection, Testing, Commissioning and Authorization

5.7.1 The Interconnection Customer shall arrange for the inspection and testing of the DER and the Customer's Interconnection Facilities prior to interconnection pursuant to Minnesota Interconnection Technical Requirements. Commissioning tests of the Interconnection Customer's installed equipment shall be performed pursuant to applicable codes and standards pursuant to Minnesota Technical Requirements.

5.7.2 The Interconnection Customer shall notify the Area EPS Operator of testing and inspection no fewer than five (5) Business Days in advance, or as may be agreed to by the Parties. Testing and inspection shall occur on a Business Day. The Area EPS Operator may, at its own expense if not required in Minnesota Interconnection Technical Requirements, send qualified personnel to the DER site to inspect the interconnection and witness the testing. The Interconnection Customer shall provide the Area EPS Operator a written results report.

5.7.3 The Area EPS Operator shall provide the Interconnection Customer written acknowledgment that it has received the Interconnection Customer's written test report. Such written acknowledgment shall not be deemed to be or construed as any representation, assurance, guarantee, or warranty by the Area EPS Operator of the safety, durability, suitability, or reliability of the DER or any associated control, protective, and safety devices owned or controlled by the Interconnection Customer or the quality of power produced by the DER.

5.8 Authorization Required Prior to Parallel Operation

5.8.1 Area EPS Operator shall use Reasonable Efforts to list applicable parallel operation requirements by attaching the Minnesota Interconnection Technical Requirements to the Interconnection Agreement. Additionally, the Area EPS Operator shall notify the Interconnection Customer of any changes to these requirements as soon as they are known. The Area EPS Operator shall make Reasonable Efforts to cooperate with the Interconnection Customer in meeting requirements necessary for the Interconnection Customer to commence parallel operations by the in-service date.

5.8.2 The Interconnection Customer shall not operate its DER in parallel with the Area EPS Operator's Distribution System without prior written permission to operate authorization from the Area EPS Operator. The Area EPS Operator shall provide such authorization within three (3) Business Days from when the Area EPS Operator receives notification that the Interconnection Customer has complied with all applicable parallel operation requirements and all payments for issued bills under the Interconnection Agreement, System Impact Study Agreement, Facilities Study

Updated by 10-23-26 Order

Agreement or Section 5.6.5 above that are past due have been paid in full. Such authorization shall not be unreasonably withheld, conditioned, or delayed.

5.9 Confidentiality

5.9.1 Confidential Information shall mean any confidential and/or proprietary information provided by one Party to the other Party that is clearly marked or otherwise designated "Confidential." For purposes of these procedures, design, operating specifications, and metering data provided by the Interconnection Customer may be deemed Confidential Information regardless of whether it is clearly marked or otherwise designated as such. If requested by either Party, the other Party shall provide in writing the basis for asserting that the information warrants confidential treatment. Parties providing a Governmental Authority trade secret, privileged or otherwise not public or nonpublic data under the Minnesota Government Data Practices Act, Minnesota Statutes Chapter 13, shall identify such data consistent with the Commission's September 1, 1999 Revised Procedures for Handling Trade Secret and Privileged Data, available online at: https://mn.gov/puc/puc-documents/#4

5.9.2 Confidential Information does not include information previously in the public domain with proper authorization, required to be publicly submitted or divulged by Governmental Authorities (after notice to the other Party and after exhausting any opportunity to oppose such publication or release), or necessary to be publicly divulged in an action to enforce these procedures. Each Party receiving Confidential Information shall hold such information in confidence and shall not disclose it to any third party nor to the public without the prior written authorization from the Party providing that information, except to fulfill obligations under these procedures, or to fulfill legal or regulatory requirements that could not otherwise be fulfilled by not making the information public.

5.9.2.1 Each Party shall hold in confidence and shall not disclose Confidential Information, to any person (except employees, officers, representatives and agents, who agree to be bound by this section). Confidential Information shall be clearly marked as such on each page or otherwise affirmatively identified. If a court, government agency or entity with the right, power, and authority to do so, requests or requires either Party, by subpoena, oral disposition, interrogatories, requests for production of documents, administrative order, or otherwise, to disclose Confidential Information, that Party shall provide the other Party with prompt notice of such request(s) or requirements(s) so that the other Party may seek an appropriate protective order or waive compliance with the terms of this Agreement. In the absence of a protective order or waiver the Party shall disclose such confidential information which, in the opinion of its counsel, the party is legally compelled to disclose. Each Party will use reasonable efforts to obtain reliable assurance that confidential treatment will be accorded any confidential information so furnished.

5.9.2.2 Critical infrastructure information or information that is deemed or otherwise designated by a Party as Critical Energy/Electric Infrastructure Information (CEII) pursuant to FERC regulation, 18 C.F.R. §388.133, as may be amended from time to time, may be subject to further protections for disclosure as required by FERC or FERC regulations or orders and the disclosing Party's CEII policies.

Updated by 10.25.26 Order

5.9.2.3 Each Party shall employ at least the same standard of care to protect Confidential Information obtained from the other Party as it employs to protect its own Confidential Information.

5.9.2.4 Each Party is entitled to equitable relief, by injunction or otherwise, to enforce its rights under this provision to prevent the release of Confidential Information without bond or proof of damages, and may seek other remedies available at law or in equity for breach of this provision.

5.10 Insurance

5.10.1 At a minimum, the Interconnection Customer shall maintain, during the term of the Interconnection Agreement, general liability insurance, from a qualified insurance agency with a B+ or better rating by "Best" and with a combined single limit of not less than the limits described in the chart below.

Distributed Energy Resource Nameplate Rating	**Liability Insurance Requirement**
≤ 40 kWac	$300,000
> 40 kWac and ≤ 250 kWac	$1,000,000
> 250 kWac and ≤ 5 MWac	$2,000,000
> 5 MWac and ≤ 10 MWac	$3,000,000

Such general liability insurance shall include coverage against claims for damages resulting from (i) bodily injury, including wrongful death; and (ii) property damage arising out of the Interconnection Customer's ownership and/or operation of the DER under this agreement.

5.10.2 The general liability insurance required shall, by endorsement to the policy or policies, (a) include the Area EPS Operator as an additional insured; (b) contain a severability of interest clause or cross-liability clause; (c) provide that the Area EPS Operator shall not by reason of its inclusion as an additional insured incur liability to the insurance carrier for the payment of premium for such insurance; and (d) provide for twenty (20) business days' written notice to the Area EPS Operator prior to cancellation, termination, alteration or material change of such insurance.

5.10.3 If the DER is connected to an account receiving residential service from the Area EPS Operator and its Nameplate Rating is less than 40kW, then the endorsements required in Section 5.10.2 shall not apply.

5.10.4 The Interconnection Customer shall furnish the required insurance certificates and endorsements to the Area EPS Operator prior to the initial operation of the DER. Thereafter, the Area EPS Operator shall have the right to periodically inspect or obtain a copy of the original policy or policies of insurance.

5.10.5 Evidence of the insurance required in Section 5.10.1 shall state that coverage provided is primary and is not excess to or contributing with any insurance or self-insurance maintained by the Area EPS Operator.

Updated by 10.2326 Order

5.10.6 If the Interconnection Customer is self-insured with an established record of self-insurance, the Interconnection Customer may comply with the following in lieu of Sections 5.10.1- 5.10.5.

5.10.6.1 Interconnection Customer shall provide the Area EPS Operator, at least twenty (20) days prior to the date of initial operation, evidence of an acceptable plan to self-insure to a level of coverage equivalent to that required under Section 5.10.1.

5.10.6.2 If the Interconnection Customer ceases to self-insure to the level required hereunder, or if the Interconnection Customer is unable to provide continuing evidence of the ability to self-insure, the Interconnection Customer agrees to immediately obtain the coverage required under Section 5.10.1.

5.10.6.3 Failure of the Interconnection Customer or the Area EPS Operator to enforce the minimum levels of insurance does not relieve the Interconnection Customer from maintaining such levels of insurance or relieve the Interconnection Customer of any liability.

5.10.7 An Interconnection Customer's insurance requirements shall be limited to no more than an aggregate cap of $35 million if the Interconnection Customer has multiple DER systems in the Area EPS Operator's service territory.

5.11 Comparability

The Area EPS Operator shall receive, process and analyze all Interconnection Applications in a timely manner as set forth in this document. The Area EPS Operator shall use the same Reasonable Efforts in processing and analyzing Interconnection Applications from all Interconnection Customers, whether the DER is owned or operated by the Area EPS Operator, its subsidiaries or affiliates, or others.

5.12 Record Retention

The Area EPS Operator shall maintain for three years records, subject to audit, of all Interconnection Applications received under these procedures, the times required to complete Interconnection Application approvals and disapprovals, and justification for the actions taken on the Interconnection Applications.

5.13 Coordination with Affected Systems

The Area EPS Operator shall coordinate the conduct of any studies required to determine the impact of the Interconnection Application on Affected Systems with Affected System operators and, if possible, include those results (if available) in its applicable interconnection study within the time frame specified in these procedures. The Area EPS Operator will make Reasonable Effort to include the Affected System operator(s) in all relevant meetings held with the Interconnection Customer as required by these procedures. The Interconnection Customer will cooperate with the Area EPS Operator and the Affected System operator(s) in all matters related to the conduct of studies and the determination of modifications to Affected Systems. Affected System operators shall cooperate with the Area EPS Operator and Interconnection Customer(s) with whom interconnection has been requested in all matters related to the conduct of studies and the determination of modifications to Affected Systems.

5.14 Capacity of the Distributed Energy Resource

Updated by 10-23-16 Order

5.14.1 Interconnection Applications shall be evaluated on the basis of the total alternating current ("AC") Export Capacity of the DER. The maximum Export Capacity of a DER shall be the Aggregate Nameplate Rating or may be limited as described in 5.14.3.

5.14.2 An Interconnection Application for a DER that includes a single or multiple energy production devices at a site for which the Interconnection Customer seeks a single Point of Common Coupling shall be evaluated on the basis of the Aggregate Nameplate Rating of the multiple DERs unless 5.14.3 applies.

5.14.3 The Export Capacity of the DER(s) may be limited by the acceptable control methods identified in the MN Technical Requirements, i.e., TIIR Section 11. If a DER uses any configuration or operating mode in the MN Technical Requirements, i.e., TIIR Section 11, to limit the export of electrical power across the PCC, then the Export Capacity shall be only the amount capable of being exported (not including any Inadvertent Export). To prevent impacts on system safety and reliability, any Inadvertent Export from a DER must comply with the limits identified in the MN Technical Requirements, i.e., TIIR Section 11. A DER using an acceptable control method is required to execute a MN DIA, in which the Export Capacity specified in the Interconnection Agreement will subsequently be included as a limitation.

If the Export Capacity of the DER(s) is limited through means other than those identified in the MN Technical Requirements i.e., TIIR Section 11, then the Interconnection Customer must obtain the Area EPS Operator's agreement that the manner in which the Interconnection Customer proposes to implement such a limit will effectively limit active power output so as to not adversely affect the safety and reliability of the Area EPS Operator's system. Such agreement shall not be unreasonably withheld. If the Area EPS Operator does not so agree, then the Interconnection Application must be withdrawn or revised (for example, to change or remove the export control). See Minnesota Technical Requirements for more detail.

5.14.4 An Interconnection Application proposing to use a configuration or operating mode to limit the export of electrical power across the PCC shall include proposed control and/or protection settings.

Updated by 10.3.26 Order

Glossary of Terms

Affected System – Another Area EPS Operator's System, Transmission Owner's Transmission System, or Transmission System connected generation which may be affected by the proposed interconnection.

Applicant Agent – A person designated in writing by the Interconnection Customer to represent or provide information to the Area EPS on the Interconnection Customer's behalf throughout the interconnection process.

Area EPS – The electric power distribution system connected at the Point of Common Coupling

Area EPS Operator – An entity that owns, controls, or operates the electric power distribution systems that are used for the provision of electric service in Minnesota.

Business Day – Monday through Friday, excluding Holidays as defined by Minn. Stat. §645.44, Subd. 5. See MN DIP Section 5.2.1 for more on computation of time

Certified Equipment - UL 1741 listing is a common form of DER inverter certification. See Attachment 4 and Attachment 5.

Confidential Information – See MN DIP 5.9

Distributed Energy Resource (DER) – A source of electric power that is not directly connected to a bulk power system. DER includes both generators and energy storage technologies capable of exporting active power to an EPS. An interconnection system or a supplemental DER device that is necessary for compliance with this standard is part of a DER. For the purpose of the MN DIP and MN DIA, the DER includes the Customer's Interconnection Facilities but shall not include the Area EPS Operator's Interconnection Facilities.

Distribution System – The Area EPS facilities which are not part of the Local EPS, Transmission System or any generation system.

Distribution Upgrades – The additions, modifications, and upgrades to the Distribution System at or beyond the Point of Common Coupling to facilitate interconnection of the DER and render the distribution service necessary to effect the Interconnection Customer's connection to the Distribution System. Distribution Upgrades do not include Interconnection Facilities.

Electric Power System (EPS) – The facilities that deliver electric power to a load.

Export Capacity - The amount of power that can be delivered from the DER to the Area EPS as measured at the Point of Common Coupling. Export Capacity is either the Nameplate Rating, or a lower amount if limited using an acceptable means identified in Section 5.14.3 and the MN Technical Requirements, i.e., TIIR Section 11.

Updated by 10.23.25 Order

Fast Track Process – The procedure as described in Section 3 for evaluating an Interconnection Application for a DER that meets the eligibility requirements of section 3.1.

Force Majeure Event – An act of God, labor disturbance, act of the public enemy, war, insurrection, riot, fire, storm or flood, explosion, breakage or accident to machinery or equipment, an order, regulation or restriction imposed by governmental, military or lawfully established civilian authorities, or another cause beyond a Party's control. A Force Majeure Event does not include an act of negligence or intentional wrongdoing.

Good Utility Practice – Any of the practices, methods and acts engaged in or approved by a significant portion of the electric industry during the relevant time period, or any of the practices, methods and act which, in the exercise of reasonable judgment in light of the facts known at the time the decision was made, could have been expected to accomplish the desired result at a reasonable cost consistent with good business practices, reliability, safety and expedition. Good Utility Practice is not intended to be limited to the optimum practice, method, or act to the exclusion of all others, but rather to be acceptable practices, methods, or acts generally accepted in the region.

Governmental Authority – Any federal, state, local or other governmental regulatory or administrative agency, court, commission, department, board, or other governmental subdivision, legislature, rulemaking board, tribunal, or other governmental authority having jurisdiction over the Parties, their respective facilities, or the respective services they provide, and exercising or entitled to exercise any administrative, executive, police, or taxing authority or power; provided, however, that such term does not include the Interconnection Customer, the Area EPS Operator, or any Affiliate thereof. The Minnesota Public Utilities Commission is the authority governing interconnection requirements unless otherwise provided for in the Minnesota Technical Requirements.

Inadvertent Export - The unscheduled export of power from a DER, exceeding parameters of defined operation for a limited duration, generally due to fluctuations in load-following behavior.

Interconnection Agreement – The terms and conditions between the Area EPS Operator and Interconnection Customer (Parties). See MN DIP Section 1.1.5 for when the Uniform Statewide Contract or MN DIA applies.

Interconnection Application – The Interconnection Customer's request to interconnect a new or modified, as described in MN DIP Section 1.6, DER. See Attachment 2 and Attachment 3 Interconnection Application Form.

Interconnection Customer – The person or entity, including the Area EPS Operator, whom will be the owner of the DER that proposes to interconnect a DER(s) with the Area EPS Operator's Distribution System. The Interconnection Customer is responsible for ensuring the DER(s) is designed, operated and maintained in compliance with the Minnesota Technical Requirements.

Updated by IX 23-26 Order

Interconnection Facilities – The Area EPS Operator's Interconnection Facilities and the Interconnection Customer's Interconnection Facilities. Collectively, Interconnection Facilities include all facilities and equipment between the DER and the Point of Common Coupling, including any modification, additions or upgrades that are necessary to physically and electrically interconnect the DER to the Area EPS Operator's System. Some examples of Customer Interconnection Facilities include: supplemental DER devices, inverters, and associated wiring and cables up to the Point of DER Connection. Some examples of Area EPS Operator Interconnection Facilities include sole use facilities; such as, line extensions, controls, relays, switches, breakers, transformers and shall not include Distribution Upgrades or Network Upgrades.

Material Modification – A modification to machine data, equipment configuration or to the interconnection site of the DER at any time after receiving notification by the Area EPS Operator of a complete Interconnection Application that has a material impact on the cost, timing, or design of any Interconnection Facilities or Upgrades, or a material impact on the cost, timing or design of any Interconnection Application with a later Queue Position or the safety or reliability of the Area EPS.[12]

MN DIA - The Minnesota Distributed Energy Resource Interconnection Agreement. See MN DIP Section 1.1.5 for when the Uniform Statewide Contract or MN DIA applies.

MN DIP – The Minnesota Distributed Energy Resource Interconnection Process. Statewide interconnection standards in this document.

MN Technical Requirements – The term including all of the DER technical interconnection requirement documents for the state of Minnesota; including: the Minnesota DER Technical Interconnection and Interoperability Requirements (TIIR) and the Dakota Electric Technical Standards Manual (TSM). The terms Technical Requirements, Minnesota Interconnection Technical Requirements and Minnesota Technical Requirements are all considered referencing this set of technical requirements for the interconnection of DER.

Updated by 10.23.26 Order

[12] A Material Modification shall include, but may not be limited to, a modification from the approved Interconnection Application that: (1) changes the physical location of the point of common coupling; such that it is likely to have an impact on technical review; (2) increases the nameplate rating or output characteristics of the Distributed Energy Resource; (3) changes or replaces generating equipment, such as generator(s), inverter(s), transformers, relaying, controls, etc., and substitutes equipment that is not like-kind substitution in certification, size, ratings, impedances, efficiencies or capabilities of the equipment; (4) changes transformer connection(s) or grounding; and/or (5) changes to a certified inverter with different specifications or different inverter control settings or configuration. A Material Modification shall not include a modification from the approved Interconnection Application that: (1) changes the ownership of a Distributed Energy Resource; (2) changes the address of the Distributed Energy Resource, so long as the physical point of common coupling remains the same; (3) changes or replaces generating equipment such as generator(s), inverter(s), solar panel(s), transformers, relaying, controls, etc. and substitutes equipment that is a like-kind substitution in certification, size, ratings, impedances, efficiencies or capabilities of the equipment; and/or (4) increases the DC/AC ratio but does not increase the maximum AC output capability of the Distributed Energy Resource in a way that is likely to have an impact on technical review.

Nameplate Rating - nominal voltage (V), current (A), maximum active power (kWac), apparent power (kVA), and reactive power (kvar) at which a DER is capable of sustained operation. For a Local EPS with multiple DER units, the aggregate nameplate rating is equal to the sum of all DERs nameplate rating in the Local EPS, not including aggregate capacity limiting mechanisms such as coincidence factors, plant controller limits, etc. that may be applicable for specific cases (Aggregate Nameplate Rating). The nameplate ratings referenced in the MN DIP are alternating current nameplate DER ratings. See Section 5.14 on Capacity of the Distributed Energy Resource and Minnesota Technical Requirements.

Network Upgrades – Additions, modifications, and upgrades to the Transmission System required at or beyond the point at which the DER interconnects with the Area EPS Operator's System to accommodate the interconnection with the DER to the Area EPS Operator's System. Network Upgrades do not include Distribution Upgrades.

Notice of Dispute – The disputing Party shall provide the other Party this written notice containing the relevant known facts pertaining to the dispute, the specific dispute and the relief sought, and express notice by the disputing Party that it is invoking the procedures under MN DIP 5.3.

Operating Requirements – Any operating and technical requirements that may be applicable due to the Transmission Provider's technical requirements or Minnesota Technical Requirements, including those set forth in the MN DIA.

Party or Parties – The Area EPS Operator and the Interconnection Customer.

Point of Common Coupling (PCC)– The point where the Interconnection Facilities connect with the Area EPS Operator's Distribution System. See figure 1. Equivalent, in most cases, to "service point" as specified by the Area EPS Operator and described in the National Electrical Code and the National Electrical Safety Code.

Updated by 10236 Order

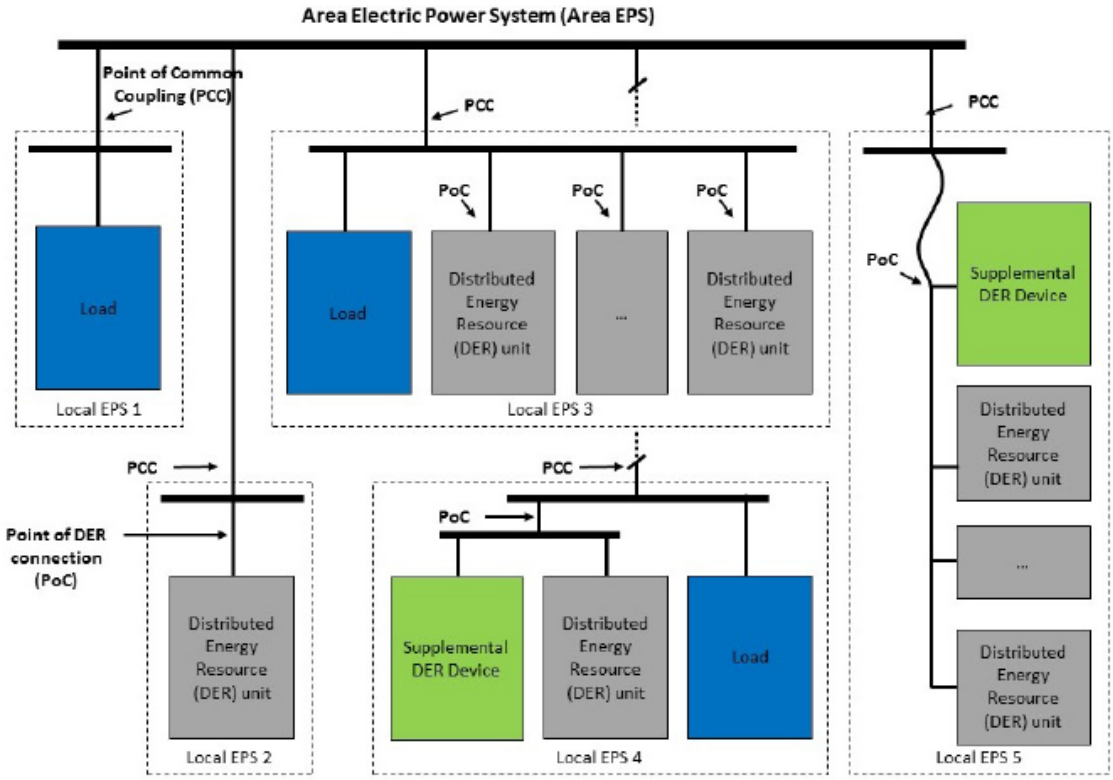

Figure 1: Point of Common Coupling and Point of DER Connection

(Source: IEEE 1547)

Point of DER Connection (PoC) – When identified as the Reference Point of Applicability, the point where an individual DER is electrically connected in a Local EPS and meets the requirements of this standard exclusive of any load present in the respective part of the Local EPS (e.g. terminals of the inverter when no supplemental DER device is required.) For DER unit(s) that are not self-sufficient to meet the requirements without (a) supplemental DER device(s), the Point of DER Connection is the point where the requirements of this standard are met by DER in conjunction with (a) supplemental DER device(s) exclusive of any load present in the respective part of the Local EPS.

Queue Position – The order of a valid Interconnection Application, relative to all other pending valid Interconnection Applications, that is established based upon the date- and time- of receipt of the complete Interconnection Application as described in sections 1.5.2 and 1.8. .

Reasonable Efforts – With respect to an action required to be attempted or taken by a Party under these procedures, efforts that are timely and consistent with Good Utility Practice and are otherwise substantially equivalent to those a Party would use to protect its own interests.

Reference Point of Applicability – The location, either the Point of Common Coupling or the Point of DER Connection, where the interconnection and interoperability performance

Updated by 10-

requirements specified in IEEE 1547 apply. With mutual agreement, the Area EPS Operator and Customer may determine a point between the Point of Common Coupling and Point of DER Connection. See Minnesota DER Technical Interconnection and Interoperability Requirements for more information.

Simplified Process – The procedure for evaluating an Interconnection Application for a certified inverter-based DER no larger than 20 kW that uses the screens described in section 3.2. The Simplified Process includes simplified procedures. Attachment 2 includes a brief set of terms and conditions, and the option for Interconnection Agreement described in 1.1.5. See Section 2.

Study Process – The procedure for evaluating an Interconnection Application that includes the Section 4 scoping meeting, system impact study, and facilities study.

Tariff – The Area EPS Operator's Tariff filed in compliance with the Minnesota Distributed Energy Resource Interconnection Procedures (MN DIP) and approved by the Minnesota Public Utilities Commission (MPUC or Commission).

Transmission Owner – The entity that owns, leases or otherwise possesses an interest in the portion of the Transmission System relevant to the Interconnection.

Transmission Provider – The entity (or its designated agent) that owns, leases, controls, or operates transmission facilities used for the transmission of electricity. The term Transmission Provider includes the Transmission Owner when the Transmission Owner is separate from the Transmission Provider. The Transmission Provider may include the Independent System Operator or Regional Transmission Operator.

Transmission System – The facilities owned, leased, controlled or operated by the Transmission Provider or the Transmission Owner that are used to provide transmission service. See the Commission's July 26, 2000 Order Adopting Boundary Guidelines for Distinguishing Transmission from Generation and Distribution Assets in Docket No. E-999/CI-99-1261.

Uniform Statewide Contract – State of Minnesota's standard, uniform contract that must be applied to all qualifying new and existing interconnections between a utility and DER having capacity less than 40 kilowatts if interconnecting with a cooperative or municipal utility, and 1,000 kilowatts if interconnecting with a public utility. (Minn. Rules 7835.9910)

Upgrades – The required additions and modifications to the Area EPS Operator's Transmission or Distribution System at or beyond the Point of Interconnection. Upgrades may be Network Upgrades or Distribution Upgrades. Upgrades do not include Interconnection Facilities.

Updated by 10-23-25 Order

MN DIP Edits Over Time

Version	Date	Orders or Reason to Edit
2.3	May 3, 2024	• 4/15/24 Commission Order in Docket E999/CI-16-521
2.4	April 24, 2025	• 10/10/23 Commission Order in Docket E999/CI-16-521 • 12/19/24 Commission Order in Docket E-002, E-015, E-017/CI-24-248 • 2/14/25 Commission Order in Docket E999/CI-16-521
2.5	October 28, 2026	• 10/23/26 Commission Order in Docket E999/CI-16-521

Updated by 10.23.26 Order

Attachment 1: Pre-Application Report Request Form

Requests for an Interconnection Pre-Application Report shall include the information identified in Sections 1.4.1.1 through 1.4.1.8 of the Minnesota Distributed Energy Resource Interconnection Process (MN DIP) (and as provided in the fields below) to clearly and sufficiently identify the location of the proposed Point of Common Coupling and relevant project details.

Additionally, a non-refundable processing fee of _____ (not to exceed $300) is required as specified in Section 1.4.4 of the MN DIP.

Upon receipt of a complete Request Form (including site map) and processing fee, the Area EPS Operator shall provide a report containing as much of the data described in Section 1.4.2 as is pre-existing and available within 15 business days. A Pre-Application Report request does not obligate the Area EPS Operator to conduct a study or other analysis of the proposed project if data is not available.

1. Requestor Contact Information:

Name: _____
Company Name (if applicable): _____
Street Address: _____
City/State/Zip: _____
Phone Number: _____
Email Address: _____

2. Project Information:

a) Project Name: _____
b) Planned Equipment:

DER Nameplate Rating:_____ kW
DER Type: Inverter based Other _____
DER Number of Phases: Single Three
Service Voltage (120/240 V, 277/480 V, etc.) : _____V
Stand-alone Generator (no onsite load)? Yes No
Existing DER? Yes No
Location of Existing DER (include county):
_____

c) Proposed Point of Common Coupling:

Note: The proposed Point of Common Coupling shall be defined by all or some combination of the below information, enough to clearly identify the location of the Point of Common Coupling.
Street Address: _____
City/State/Zip Code: _____

Updated by 10.23.26 Order

County: _____
Cross streets: _____
Latitude (in degrees/minutes/seconds or 6 decimal places):
_____
Longitude: _____
Meter number: _____
Utility equipment number (e.g. pole number): _____
Other identifying information: _____
_____

d) An attached Site Map is required that shows the following:
•True north
•Proposed project location, including general area of project
•Proposed service point location
•Major roads, streets and/or highways

3. Requestor Signature:

I understand that the confidentiality provisions of MN DIP Section 5.9 apply to the contents of the Pre-Application Report. The MN DIP Section 5.9, states in part as follows:

"*Each Party shall hold in confidence and shall not disclose Confidential Information, to any person (except employees, officers, representatives and agents, who agree to be bound by this section). Confidential Information shall be clearly marked as such on each page or otherwise affirmatively identified. … Each Party shall employ at least the same standard of care to protect Confidential Information obtained from the other Party as it employs to protect its own Confidential Information. … Each Party is entitled to equitable relief, by injunction or otherwise, to enforce its rights under this provision to prevent the release of Confidential Information without bond or proof of damages, and may seek other remedies available at law or in equity for breach of this provision.*"

I understand that 1) the existence of "Available Capacity" in no way implies that an interconnection up to this level may be completed without impacts since there are many variables studied as part of the interconnection review process, 2) the distribution system is dynamic and subject to change and 3) data provided in the Pre-Application Report may become outdated and not useful at the time of submission of the complete Interconnection Request.

Name (type or print): _____
Signature: _____
Date: _____

Pre-Application Report requests shall be submitted with attachments to:
[Fill in method of submittal as specified by Area EPS]

Fees shall be submitted by:
[Fill in method of payment as specified by Area EPS]

Updated By IO 25-26 Order

Attachment 2: Simplified Application Form

This form is only available for certified, inverter-based Distributed Energy Resources (DERs) with a Nameplate Rating of 50 kW AC or less and an Export Capacity of 20 kW AC or less that meets the codes, standards and certification requirements of Attachment 4: Certified Codes and Standards and Attachment 5: Certification of Distributed Energy Resource Equipment. that meets the eligibility of the Minnesota Interconnection Process (see 1.1) and are not eligible for consideration under the Section 2 Simplified Process.

The Interconnection Application is to be filled out completely by the applicant or as noted in each section of the application. Section that are noted with * are required to be filled out along with bolded items.

Checklist for Submission to Area EPS Operator	
The items below shall be included with submittal of the Interconnection Application to the Area EPS Operator. Failure to include all items will deem the Interconnection Application incomplete.	
	Included
$100 Non-Refundable Processing Fee	☐ Yes
One-line diagram • Please see Area EPS Operator's Technical Specification Manual for more details.	☐ Yes
Documentation showing site control (see MN DIP Section 1.7).	☐ Yes
Site Diagram showing DER system layout (See TSM for more details)	☐ Yes
Possible Additional Documentation (See TSM for more details) • If requesting the DER export capacity to be limited, include information material explaining the limiting capabilities. • Schematic drawings for all protection and control circuits, relay current circuits, relay potential circuits, and alarm/monitoring circuits (if applicable). • Documentation that describes and details the operation of protection and control schemes (if applicable). • Inverter Specification Sheet(s).	

Updated by 10.25.16 Order

Interconnection Customer/Owner *	
Full Name (match name of electric service account, if applicable)**:**	
Account Number:	**Meter Number:**
Mailing Address:	
Email:	**Phone:**

Application Agent *	
Is the Interconnection Customer using an Application Agent for this application? ☐ Yes ☐ No	
If Interconnection Customer is not using an Applicant Agent, please continue to next section.	
Application Agent:	
Company Name:	
Email:	Phone:

DER Location *
Is the proposed DER system to be located at the Interconnection Customer's mailing address: ☐ Yes ☐ No
If Yes, please continue to the next section.
If No, will the proposed DER system be interconnected to an existing electric service? ☐ Yes ☐ No
Please provide the address or GPS coordinates:
If not an existing service, please state the proposed service entrance size (amps):

General *
Choose one of the following and provide applicable data:
☐ Application is for a new DER
Aggregate DER Nameplate Rating of all generation and storage types (kW AC):
☐ Application is for a Nameplate Rating addition to an existing DER Nameplate Rating of existing DER (kW AC): _____Nameplate Rating proposed to be added (kW AC):___
☐ Application is for a Export Capacity addition to an existing DER Export Capacity of existing DER (kW AC): _____Export Capacity proposed to be added (kW AC):___
☐ Application is for a Material Modification to an existing DER
If Material Modification to existing facility, please describe:
Distributed Energy Resource will be used for what reason? (Check all that apply):

Updated by 10.23.26 Order

☐ Net Metering ☐ To only supply power to Area EPS	☐ To only supply power to Interconnection Customer
Installed DER System Cost (before incentives): $	

Distributed Energy Resource Information *

Phase configuration of Distributed Energy Resource(s): ☐ Single-Phase ☐ Three-Phase			
DER Type (Check all that apply and list aggregate Nameplate Rating of each type):			
☐ Solar Photovoltaics	Aggregate Nameplate Rating (kW AC):	☐ Wind	Aggregate Nameplate Rating (kW AC):
☐ Storage	Aggregate Nameplate Rating (kW AC):	☐ Other	Aggregate Nameplate Rating (kW AC):
Please specify other:			

Export Capacity Limitation *

Is the maximum Export Capacity request the same as the Nameplate Rating: ☐ Yes ☐ No	
If Yes, please continue to the next section.	
If No, select method of export control per TIIR Section 11.3:	
☐ Reverse Power Protection (Device 32R)	☐ Configured Power Rating
☐ Minimum Power Protection (Device 32F)	☐ Certified Power Control System (UL 3141)
☐ Directional Power Protection (Device 32)	☐ Export control using mutually agreed-upon means
Control Power Limit Setting:_____ (kW) _____(kVA)	
When grid-connected, will the PCS employ any of the following? [Select all that apply]	
☐ Export-only mode	☐ Export-limiting from all sources
☐ Import-only mode	☐ Export-limiting from ESS
☐ No exchange mode	☐ Import-limiting to ESS
Export controls are applied to how many DERs?	
☐ One	☐ Multiple (indicate number) _____
Describe which DERs the export control system controls: _____	
_____	

Inverter Interconnected System Information – non ESS (if applicable) *

Aggregate Inverter Rating (kW AC):	**Number of Total Inverters:**
Phase configuration of inverter(s): ☐ Single-Phase ☐ Three-Phase	
Voltage of Inverter(s):	
Inverter Manufacturer:	

Updated by 10-22-26 Order

1. Model No.	**Certification** ☐ UL 1741 ☐ UL 1741-SA ☐ UL 1741-SB
Inverter Rating (kW AC):	**Number of Units of this Model:**
2. Model No.	Certification ☐ UL 1741 ☐ UL 1741-SA ☐ UL 1741-SB
Inverter Rating (kW AC):	Number of Units of this Model:
3. Model No.	Certification ☐ UL 1741 ☐ UL 1741-SA ☐ UL 1741-SB
Inverter Rating (kW AC):	Number of Units of this Model:
4. Model No.	Certification ☐ UL 1741 ☐ UL 1741-SA ☐ UL 1741-SB
Inverter Rating (kW AC):	Number of Units of this Model:

Updated by 10.23.26 Order

Energy Storage System Information (if applicable)	
ESS Inverter Energy Rating (kWh AC):	**ESS Inverter Capacity Rating (kW AC):**
How will the ESS be used? Select all Use Cases that apply. ☐ Outage Protection/Backup Power ☐ Demand Reduction ☐ No Export ☐ Time-of-Use Energy Management ☐ Increased Self-Consumption ☐ Other	
Please specify other:	
If multiple DERs are used, select all that apply. ☐ ESS Export is Allowed ☐ Solar Export is Allowed	
Is the ESS recharging limited to certain times of the day and/or after a power outage? ☐ Yes ☐ No If Yes, please explain:	
If the ESS shares an inverter that is listed in the previous section, please skip the rest of this section.	
Aggregate ESS Inverter Rating (kW AC):	**Number of Total ESS Inverters:**
Phase configuration of ESS inverter(s): ☐ Single-Phase ☐ Three-Phase	
Voltage of ESS Inverter(s):	
ESS Inverter Manufacturer:	
1. Model No.	**Certification** ☐ UL 1741 ☐ UL 1741-SA ☐ UL 1741-SB
Inverter Rating (kW AC):	**Number of Units of this Model:**
2. Model No.	Certification ☐ UL 1741 ☐ UL 1741-SA ☐ UL 1741-SB
Inverter Rating (kW AC):	Number of Units of this Model:
3. Model No.	Certification ☐ UL 1741 ☐ UL 1741-SA ☐ UL 1741-SB
Inverter Rating (kW AC):	Number of Units of this Model:
4. Model No.	Certification ☐ UL 1741 ☐ UL 1741-SA ☐ UL 1741-SB
Inverter Rating (kW AC):	Number of Units of this Model:

Additional Documentation

Please see the Area EPS Operator's Technical Specification Manual (TSM) for requirements that need to be on the one-line and site diagram and for example application documentation.

Please see the Interconnection Process (MN DIP) for additional requirements related to Site Control and insurance documentation.

Updated by 10.23.26 Order

Interconnection Agreement *	
Proposed DER interconnections under the Simplified Process are eligible to sign the Uniform Statewide Contract. Interconnection Customers may choose to also sign the Minnesota DER Interconnection Agreement, MN DIA. (MN DIP Section 1.1.15). Interconnection Customers are not required to sign both agreements.	
The Interconnection Customer requests an Interconnection Agreement also be executed.	☐ Yes ☐ No

Acknowledgements – Must be completed by Interconnection Customer *	
	Initials
The Interconnection Customer has opportunities to request a timeline extension during the interconnection process See MN DIP Section 1.8.2 and 5.2.3). Failure by the Interconnection Customer to meet or request an extension as described in MN DIP Section 5.2.3 for a timeline outlined in the Interconnection Process could result in a withdrawn queue position and the need to re-apply.	
Proposed DER interconnection to the Utility's distribution submitted under the Simplified Process may be moved into the Fast Track Process if engineering screens are failed during the Interconnection Application review. The Interconnection Customer will be contacted regarding the next steps in the Fast Track Process.	

Updated by 10-23-20 Order

*Application Signature – Must be completed by Interconnection Customer **

I designate the individual or company listed as my Application Agent to serve as my agent for the purpose of coordinating with the Area EPS Operator on my behalf throughout the interconnection process (see MN DIP 1.3.2). _____ Initials

I hereby certify that, to the best of my knowledge, the information provided in this Interconnection Application is true and I have appropriate Site Control in conformance with MN DIP. I agree to abide by the Terms and Conditions for Interconnecting an Inverter-based Distribution Energy Resource No Larger than 20 kW (Simplified Process) (see Exhibit A) and return the Certification of Completion (see Exhibit C) when the DER has been installed.

_____ _____

Applicant Signature: Date:

*****Please print clearly or type and return completed along with any additional documentation*****

Updated by 10.23.26 Order

Attachment 2: Simplified Application Form (cont'd)
Exhibit A – Terms and Conditions for Interconnecting an Inverter-Based DER No Larger than 20 kW

1.0 Construction of the Facility

The Interconnection Customer (the "Customer") may proceed to construct (including operational testing not to exceed two hours) the Distributed Energy Resource(s) when the Area EPS Operator (the "Company") approves the Interconnection Application (the "Application").

2.0 Interconnection and Operation

The Customer may operate Distributed Energy Resource(s) and interconnect with the Company's electric system once all of the following have occurred:

2.1 Upon completing construction, the Customer will cause the Distributed Energy Resource(s) to be inspected or otherwise certified by the appropriate local electrical wiring inspector with jurisdiction, and

2.2 The Customer returns the Certificate of Completion to the Company, and

2.3 The Company:

2.3.1 Shall have the opportunity to witness test as described in Minnesota Technical Requirements, but takes no liability for the results of the test. Completes its inspection of the Distributed Energy Resource(s) to ensure that all equipment has been appropriately installed and that all electrical connections have been made in accordance with applicable codes and standards. All inspections must be conducted by the Company, at its own expense, within ten Business Days after receipt of the Certificate of Completion and shall take place at a time agreeable to the Parties. The Company shall provide a written permission to operate authorization that the Distributed Energy Resource(s) has passed inspection or shall notify the Customer of what steps it must take to pass inspection within three (3) Business Days.

or

2.3.2 Does not schedule an inspection of the Distributed Energy Resource(s) within ten business days after receiving the Certificate of Completion, in which case the witness test is deemed waived (unless the Parties agree otherwise).

or

2.3.3 Waives the right to inspect the Distributed Energy Resource(s).

2.4 The Company has the right to disconnect the Distributed Energy Resource(s) in the event of: 1) improper installation or failure to return the Certificate of Completion, or 2) does not meet any of the requirements of this Agreement or, 3) if applicable, refusal to sign Uniform Statewide Contract.

Updated by 10.23.26 Order

2.5 Revenue quality metering equipment must be installed and tested in accordance with applicable Minnesota Technical Requirements.

2.6 If the Distributed Energy Resource(s) either: 1) does not use default IEEE 1547-2018 functions and settings; or 2) is not yet subject to a developed national standard or national certification, then at the option of the Area EPS Operator there needs to be in place an operating agreement to document and govern the operation of the Distributed Energy Resource(s).

3.0 Safe Operations and Maintenance

The Customer shall be fully responsible to operate, maintain, and repair the Distributed Energy Resource(s) as required to ensure that it complies at all times with the interconnection standards to which it has been certified.

4.0 Access

The Company shall have access to the disconnect switch, if required by the Area EPS Operator, and metering equipment of the Distributed Energy Resource(s) at all times as described in Minnesota Technical Requirements. The Company shall provide reasonable notice to the Customer when possible prior to using its right of access.

5.0 Disconnection

The Company may temporarily disconnect the Distributed Energy Resource(s) upon the following conditions:

5.1 For scheduled outages upon reasonable notice.

5.2 For unscheduled outages or emergency conditions.

5.3 If the Distributed Energy Resource does not operate in the manner consistent with these Terms and Conditions.

5.4 The Company shall inform the Customer in advance of any scheduled disconnection, or as is reasonable after an unscheduled disconnection.

5.5 If the Customer is in Default it may be disconnected after a 60-day written notice is provided and the Default is not cured during this 60-day notice. This provision does not apply to disconnection based on outages or emergency conditions.

6.0 Treatment Similar to Other Retail Customers

6.1 The Customer may be disconnected consistent with the rules and practices for disconnecting other retail electrical customer.

7.0 Indemnification

7.1 This provision protects each Party from liability incurred to third parties as a result of carrying out the provisions of this Agreement.

7.2 The Parties shall at all times indemnify, defend, and save the other Party harmless from, any and all damages, losses, claims, including claims and actions relating to injury to or death of any person or damage to property, demand, suits, recoveries, costs and expenses, court costs, attorney fees, and all other obligations by or to third parties, arising out of or resulting from the other Party's action or inactions

Updated by 10.23.26 Order

of its obligations under this agreement on behalf of the indemnifying Party, except in cases of gross negligence or intentional wrongdoing by the indemnified Party.

7.3 This indemnification obligation shall apply notwithstanding any negligent or intentional acts, errors or omissions of the indemnified Party, but the indemnifying Party's liability to indemnify the indemnified Party shall be reduced in proportion to the percentage by which the indemnified Party's negligent or intentional acts, errors or omissions caused the damages.

7.4 Neither Party shall be indemnified for its damages resulting from its sole negligence, intentional acts or willful misconduct. These indemnity provisions shall not be construed to relieve any insurer of its obligation to pay claims consistent with the provisions of a valid insurance policy.

7.5 If an indemnified person is entitled to indemnification under this article as a result of a claim by a third party, and the indemnifying Party fails, after notice and reasonable opportunity to proceed under this article, to assume the defense of such claim, such indemnified person may at the expense of the indemnifying Party contest, settle or consent to the entry of any judgment with respect to, or pay in full, such claim.

7.6 If an indemnifying party is obligated to indemnify and hold any indemnified person harmless under this article, the amount owing to the indemnified person shall be the amount of such indemnified person's actual loss, net of any insurance or other recovery.

8.0 Promptly after receipt by an indemnified person of any claim or notice of the commencement of any action or administrative or legal proceeding or investigation as to which the indemnity provided for in this article may apply, the indemnified person shall notify the indemnifying party of such fact. Any failure of or delay in such notification shall not affect a Party's indemnification obligation unless such failure or delay is materially prejudicial to the indemnifying party.

9.0 Insurance

The Parties agree to follow all applicable insurance requirements imposed by Minnesota. All insurance policies must be maintained with insurers authorized to do business in Minnesota. See MN DIP Section 5.10.

10.0 Limitation of Liability

Each party's liability to the other party for any loss, cost, claim, injury, liability, or expense, including reasonable attorney's fees, relating to or arising from any act or omission in its performance of this Agreement, shall be limited to the amount of direct damage actually incurred. In no event shall either party be liable to the other party for any indirect, incidental, special, consequential, or punitive damages of any kind whatsoever, except as allowed under paragraph 6.0.

11.0 Termination

The agreement to operate in parallel may be terminated under the following conditions:

Updated by 10-23-20 Order

11.1 By the Customer

By providing written notice to the Company

11.2 By the Company

If the Distributed Energy Resource(s) fails to operate for any consecutive 12 month period or the Customer fails to remedy a violation of these Terms and Conditions.

11.3 Permanent Disconnection

In the event this Agreement is terminated, the Company shall have the right to disconnect its facilities or direct the Customer to disconnect its Distributed Energy Resource.

11.4 Survival Rights

This Agreement shall continue in effect after termination to the extent necessary to allow or require either Party to fulfill rights or obligations that arose under the Agreement.

12.0 Assignment/Transfer of Ownership of the Facility

This Agreement shall survive the transfer of ownership of the Distributed Energy Resource(s) to a new owner when the new owner agrees in writing to comply with the terms of this Agreement and so notifies the Company.

Updated by 10-23-26 Order

Exhibit C – Certificate of Completion

Distributed Energy Resource Certificate of Completion

MN DIP Simplified Process Interconnection

Customer:_____

Account Number: _____ Meter Number: _____

Application ID number: _____

Address of Distributed Energy Resource (DER):

_____

City: _____ State: MN Zip: _____

Is the DER owner-installed? Yes No If no: Install

Company:_____

Contact:_____

Phone: _____ Email: _____

Electrician Name / License#: _____

The DER has been installed and inspected in compliance with the local electrical permitting authority as verified by the signature below or the additionally attached document.

Inspector Signature: _____

Print Name: _____ Date: _____

Authority Having Jurisdiction (city/county): _____

As a condition of interconnection, email a completed copy of this form to _____ at _____.

Electronic submission of this form through an Area EPS Operator's online portal [if one exists] shall be an alternative means to satisfy the Certificate of Completion submission requirements.

If you prefer to mail the form, please mail to:

Updated by 10.23.26 Order

Attachment 3: Interconnection Application Form

This form is for Distributed Energy Resources (DERs) that meet the eligibility of the Minnesota Interconnection Process (see 1.1) and are not eligible for consideration under the Section 2 Simplified Process.

The Interconnection Application is to be filled out completely by the applicant or as noted in each section of the application. Section that are noted with * are required to be filled out along with bolded items.

Updated by 10.23.26 Order

Checklist for Submission to Area EPS Operator	
The items below shall be included with submittal of the Interconnection Application to the Area EPS Operator. Failure to include all items will deem the Interconnection Application incomplete.	
	Included
Non-Refundable Processing Fee Fast Track • $100 + $1/kW for Certified Systems • $100 + $2/kW for Non-Certified Systems Study Process • $1,000 + $2/kW down payment. Additional study fees may apply.	☐ Yes
One-line diagram • Please see Area EPS Operator's Technical Specification Manual for more details.	☐ Yes
Documentation showing site control (see MN DIP Section 1.7).	☐ Yes
Site Diagram showing DER system layout (See TSM for more details)	☐ Yes
<u>Possible Additional Documentation (See TSM for more details)</u> • If requesting the DER export capacity to be limited, include information material explaining the limiting capabilities. • Schematic drawings for all protection and control circuits, relay current circuits, relay potential circuits, and alarm/monitoring circuits (if applicable). • Documentation that describes and details the operation of protection and control schemes (if applicable). • Inverter Specification Sheet(s) (if applicable).	

Interconnection Customer/Owner *	
Full Name (match name of electric service account, if applicable)**:**	
Account Number:	**Meter Number:**
Mailing Address:	
Email:	**Phone:**

Application Agent *	
Is the Interconnection Customer using an Application Agent for this application? ☐ Yes ☐ No	
If Interconnection Customer is not using an Applicant Agent, please continue to next section.	
Application Agent:	
Company Name:	
Email:	Phone:

DER Location *
Is the proposed DER system to be located at the Interconnection Customer's mailing address: ☐ Yes ☐ No
If Yes, please continue to the next section.
If No, will the proposed DER system be interconnected to an existing electric service? ☐ Yes ☐ No
Please provide the address or GPS coordinates:
If not an existing service, please state the proposed service entrance size (amps):

General *
Select Review Process: ☐ Fast Track Process ☐ Study Process
Choose one of the following and provide applicable data:
☐ Application is for a new DER
Aggregate DER Nameplate Rating of all generation and storage types (kW AC):
☐ Application is for a Nameplate Rating addition to an existing DER Nameplate Rating of existing DER (kW AC): _____Nameplate Rating proposed to be added (kW AC):___
☐ Application is for a Export Capacity addition to an existing DER Export Capacity of existing DER (kW AC): _____Export Capacity proposed to be added (kW AC):___
☐ Application is for a Material Modification to an existing DER
If Material Modification to existing facility, please describe:
Distributed Energy Resource will be used for what reason? (Check all that apply): ☐ Net Metering ☐ To only supply power to Interconnection Customer ☐ To only supply power to Area EPS

Updated by 10.25.26 Order

Type of Generator (check all that apply):	☐ Inverter	☐ Induction or Synchronous
Installed DER System Cost (before incentives): $		

Distributed Energy Resource Information *

Phase configuration of Distributed Energy Resource(s): ☐ Single-Phase ☐ Three-Phase

DER Type (Check all that apply and list aggregate Nameplate Rating of each type):

☐ Solar Photovoltaics	Aggregate Nameplate Rating (kW AC):	☐ Wind	Aggregate Nameplate Rating (kW AC):
☐ Storage	Aggregate Nameplate Rating (kW AC):	☐ Diesel	Aggregate Nameplate Rating (kW AC):
☐ Natural Gas	Aggregate Nameplate Rating (kW AC):	☐ Fuel Oil	Aggregate Nameplate Rating (kW AC):
☐ Hydro Type	Aggregate Nameplate Rating (kW AC):	☐ Other	Aggregate Nameplate Rating (kW AC):

Please specify other:

Export Capacity Limitation *

Is the maximum Export Capacity request the same as the Nameplate Rating: ☐ Yes ☐ No

If Yes, please continue to the next section.

If No, select method of export control per TIIR Section 11.3:

☐ Reverse Power Protection (Device 32R)
☐ Minimum Power Protection (Device 32F)
☐ Directional Power Protection (Device 32)
☐ Configured Power Rating
☐ Certified Power Control System (UL 3141)
☐ Export control using mutually agreed-upon means

Control Power Limit Setting:_____ (kW) _____(kVA)

When grid-connected, will the PCS employ any of the following? [Select all that apply]

☐ Export-only mode
☐ Import-only mode
☐ No exchange mode
☐ Export-limiting from all sources
☐ Export-limiting from ESS
☐ Import-limiting to ESS

Export controls are applied to how many DERs?

☐ One
☐ Multiple (indicate number) _____

Describe which DERs the export control system controls: _____

_____

Interconnection Facilities Information *

Updated by 10-3.26 Order

What type of DER Interconnection/Transfer Method is Proposed?

☐ None (DER is never operating parallel with the distribution system)

☐ Extended Parallel/Continuous (The normal state of the DER is to operate parallel with the distribution system.)

☐ Limited (DER operated parallel with the distribution system for a short time). Please specify what type of Limited.

☐ Quick Closed (100msec parallel or less) ☐ Limited Parallel (2 minutes or less)

Will a transfer switch be used with the DER? ☐ Yes ☐ No		
Manufacturer:	Model:	Load Rating (in Amps):
Will a transformer, owned by the Interconnection Customer, be used between the DER and the Point of Common Coupling?		☐ Yes ☐ No
Please show proposed location of protective interface equipment on property on the submitted site diagram.		

Transformer Data (For Interconnection Customer-Owned Transformer) (if applicable) ***(Ex. Transformers used for secondary voltage conversion or primary metered interconnections)***			
What is the phase configuration of the transformer?			☐ Single Phase ☐ Three Phase
Size (kVA):		*Transformer Impedance (%):*	On kVA Base:
Transformer Volts: (Primary)	Delta:	Wye:	Wye Grounded:
Transformer Volts: (Secondary)	Delta:	Wye:	Wye Grounded:
Transformer Volts: (Tertiary)	Delta:	Wye:	Wye Grounded:
Transformer Fuse Data (For Interconnection Customer-Owned Fuse)			
Manufacturer:	Type:	Size:	Speed:
Interconnecting Circuit Breaker (For Interconnection Customer-Owned Circuit Breaker) (if applicable)			
Manufacturer:		Type:	
Load Rating (in Amps):	Interrupting Rating (In Amps):		Trip Speed (Cycles):

Updated by 10-23-26 Order

Interconnection Protective Relays: Please show protective relay manufacturer, model and type on the one-line diagram.
Current and Potential Transformer Data: Please show CT ratios and CT/PT locations on one-line

Fill out all following sections which pertain to the proposed DER installation

Inverter Interconnected System Information – non ESS (if applicable)	
Aggregate Inverter Rating (kW AC):	**Number of Total Inverters:**
Phase configuration of inverter(s): ☐ Single-Phase ☐ Three-Phase	
Voltage of Inverter(s):	
Inverter Manufacturer:	
1. Model No.	**Certification** ☐ UL 1741 ☐ UL 1741-SA ☐ UL 1741-SB
Inverter Rating (kW AC):	**Number of Units of this Model:**
2. Model No.	Certification ☐ UL 1741 ☐ UL 1741-SA ☐ UL 1741-SB
Inverter Rating (kW AC):	Number of Units of this Model:
3. Model No.	Certification ☐ UL 1741 ☐ UL 1741-SA ☐ UL 1741-SB
Inverter Rating (kW AC):	Number of Units of this Model:
4. Model No.	Certification ☐ UL 1741 ☐ UL 1741-SA ☐ UL 1741-SB
Inverter Rating (kW AC):	Number of Units of this Model:

Energy Storage System Information (if applicable)	
ESS Inverter Energy Rating (kWh AC):	**ESS Inverter Capacity Rating (kW AC):**
How will the ESS be used? Select all Use Cases that apply. ☐ Outage Protection/Backup Power ☐ Demand Reduction ☐ No Export ☐ Time-of-Use Energy Management ☐ Increased Self-Consumption ☐ Other	
Please specify other:	
If multiple DERs are used, select all that apply. ☐ ESS Export is Allowed ☐ Solar Export is Allowed	
Is the ESS recharging limited to certain times of the day and/or after a power outage? ☐ Yes ☐ No If Yes, please explain:	
If the ESS shares an inverter that is listed in the previous section, please skip the rest of this section.	
Aggregate ESS Inverter Rating (kW AC):	**Number of Total ESS Inverters:**
Phase configuration of ESS inverter(s): ☐ Single-Phase ☐ Three-Phase	
Voltage of ESS Inverter(s):	

Updated by 10-22-26 Order

ESS Inverter Manufacturer:	
1. Model No.	**Certification** ☐ UL 1741 ☐ UL 1741-SA ☐ UL 1741-SB
Inverter Rating (kW AC):	**Number of Units of this Model:**
2. Model No.	Certification ☐ UL 1741 ☐ UL 1741-SA ☐ UL 1741-SB
Inverter Rating (kW AC):	Number of Units of this Model:
3. Model No.	Certification ☐ UL 1741 ☐ UL 1741-SA ☐ UL 1741-SB
Inverter Rating (kW AC):	Number of Units of this Model:
4. Model No.	Certification ☐ UL 1741 ☐ UL 1741-SA ☐ UL 1741-SB
Inverter Rating (kW AC):	Number of Units of this Model:

Updated by 10.23.26 Order

Rotating Generation System Information (if applicable) **Prime Mover Information**		
Please indicate the prime mover: ☐ Microturbine ☐ Reciprocating Engine ☐ Hydro ☐ Wind ☐ Other (please specify)		
Generator type ☐ Induction ☐ Synchronous		
Manufacturer:	Model Name & Number:	Version:

Summer Name Plate Rating:	kW_{ac}	Summer Name Plate Rating:	kW_{ac}
Winter Name Plate Rating:	kVA_{ac}	Winter Name Plate Rating:	kVA_{ac}

Rated Power Factor:	Leading:	Lagging:

Distributed Energy Resource Characteristic Data (for Synchronous machines)	
RPM Frequency:	Neutral Grounding Resistor:
Direct Axis Synchronous Reactance, XX:	Zero Sequence Reactance, XX_0:
Direct Axis Transient Reactance, XX'_{dd}:	KVA Base:
Direct Axis Subtransient Reactance, XX''_{dd}:	Field Volts:
Negative Sequence Reactance, XX_2:	Field Amperes:
For Synchronous Generators 1 MW or larger, please provide the appropriate IEEE model block diagram of excitation system, governing system and power system stabilizer (PSS) in accordance with the regional reliability council criteria. A PSS may be determined to be required by applicable studies. A copy of the manufacturer's block diagram may not be submitted.	

Updated by 10-23-6 Order

Distributed Energy Resource Characteristic Data (for Induction machines)	
RPM Frequency:	Neutral Grounding Resistor:
Motoring Power (kW):	Exciting Current:
Heating Time Constant:	Temperature Rise:
Rotor Resistance, RR_{rr}:	Frame Size:
Stator Resistance, RR_{ss}:	Design Letter:
Stator Reactance, XX:	Reactive Power Required In Vars (No Load):
Rotor Reactance, XX:	Reactive Power Required In Vars (Full Load):
Magnetizing Reactance, XX_{mm}:	Total Rotating Inertia, H:
Short Circuit Reactance, X''_{dd}:	

Additional Documentation

On the one-line please show the interconnection transformer and provide the transformer winding configuration, primary and secondary transformer voltage, transformer protection information and expected impedance. Please also show how the transformer will be protected to meet the NEC requirements.

Please see the Area EPS Operator's Technical Specification Manual (TSM) for requirements that need to be on the one-line and site diagram and for example application documentation.

Please see the Interconnection Process (MN DIP) for additional requirements related to Site Control and insurance documentation.

Updated by 10.23.26 Order

Acknowledgements – Must be completed by Interconnection Customer *	
	Initials
The Interconnection Customer has opportunities to request a timeline extension during the interconnection process. See MN DIP Section 1.8.2 and 5.2.3). Failure by the Interconnection Customer to meet or request an extension as described in MN DIP Section 5.2.3 for a timeline outlined in the Interconnection Process could result in a withdrawn queue position and the need to re-apply.	
Proposed DER interconnection to the Area EPS Operator's distribution system submitted under the Fast Track Process may be moved into the Study Process if engineering screens are failed during the Interconnection Application review. The Interconnection Customer will be contacted to approve being moved into the Study Process.	

*Application Signature – Must be completed by Interconnection Customer **

I designate the individual or company listed as my Application Agent to serve as my agent for the purpose of coordinating with the Area EPS Operator on my behalf throughout the interconnection process.

_____
Initials

I hereby certify that, to the best of my knowledge, the information provided in this Interconnection Application is true and correct.

_____ _____

Applicant Signature: Date:

*****Please print clearly or type and return completed along with any additional documentation*****

Updated by 10.23.26 Order

Attachment 4: Certification Codes and Standards

The standards, codes, certification, guides and recommended practices listed in this section are active as of the publication of this document. These standards, codes, certifications, guides and recommended practices may be superseded, withdrawn, or additional applicable revisions may become available after the publication of this document. Later revisions of the technical references listed below may be available and supersede the versions referenced in this document. At the time an interconnection application is submitted, the Area EPS Operator and the DER Operator shall use the most recent applicable technical reference. Application of industry standards, codes, certifications, guides and recommended practices shall be consistent with the standard governing body's manuals, policies, and procedures.

IEC TR 61000-3-7:2008, Electromagnetic compatibility (EMC) - Part 3-7: Limits - Assessment of emission limits for the connection of fluctuating installations to MV, HV and EHV power systems.

IEC 61000-4-3:2006+A1:2007+A2:2010, Electromagnetic compatibility (EMC) - Part 4-3: Testing and measurement techniques - Radiated, radio-frequency, electromagnetic field immunity test.

IEC 61000-4-5:2014+A1:2017, Electromagnetic compatibility (EMC) - Part 4-5: Testing and measurement techniques – Surge immunity test.

IEEE Std 1547-2018, IEEE Standard for Interconnection and Interoperability of Distributed Energy Resources with Associated Electric Power Systems Interfaces

IEEE Std 1547a-2020, IEEE Standard for Interconnection and Interoperability of Distributed Energy Resources with Associated Electric Power Systems Interfaces, Amendment 1: To Provide More Flexibility for Adoption of Abnormal Operating Performance Category III

IEEE Std 1547.1-2020, IEEE Standard Conformance Test Procedures for Equipment Interconnecting Distributed Resources with Electric Power Systems

IEEE Std 1547.2, Application Guide for IEEE 1547 Standard for Interconnecting Distributed Resources with Electric Power Systems

IEEE Std 1547.3-2007, Guide for Monitoring Information Exchange and Control of DR Interconnected with Electric Power Systems

IEEE Std 1547.4-2011, IEEE Guide for Design, Operation, and Integration of Distributed Resource Island System with Electric Power Systems

IEEE Std 1547.6-2011, IEEE Recommended Practice for Interconnecting Distributed Resources with Electric Power Systems Distribution Secondary Networks

IEEE Std 1547.7-2013, IEEE Guide for Conducting Distribution Impact Studies for Distributed Resource Interconnection

IEEE Std 519-2014, IEEE Recommended Practices and Requirements for Harmonic Control in Electric Power Systems

Updated by 10.23.26 Order

IEEE Std 1453-2015, IEEE Recommended Practice for the Analysis of Fluctuating Installation on Power Systems

IEEE Std 1453.1-2012 (Adoption of IEC/TR 61000-3-7:2008) - IEEE Guide--Adoption of IEC/TR 61000-3-7:2008, Electromagnetic compatibility (EMC)--Limits--Assessment of emission limits for the connection of fluctuating installations to MV, HV and EHV power systems

IEEE Std C37.90-2005, IEEE Standard for Relay Systems Associated with Electric Power Apparatus

IEEE Std C37.90.1-2012, IEEE Standard Surge Withstand Capability (SEC) Tests for Protective Relays and Relay Systems Associated with Electric Power Apparatus

IEEE Std C37.90.2-2004, IEEE Standard Withstand Capability of Relay Systems to Radiated Electromagnetic Interference from Transceivers

IEEE C37.95-2014, IEEE Guide for Protective Relaying of Utility-Consumer Interconnections

IEEE Std C50.12-2005, IEEE Standard for Salient-Pole 50 Hz and 60 Hz Synchronous Generators and Generator/Motors for Hydraulic Turbine Applications Rated 5 MVA and Above.

IEEE Std C50.13-2014, IEEE Standard for Cylindrical-Rotor 50 Hz and 60 Hz Synchronous Generators Rated 10 MVA and Above.

IEEE Std C62.41.2-2002, IEEE Recommended Practice on Characterization of Surges in Low Voltage (1000V and Less) AC Power Circuits

IEEE Std C62.42-2016, Guide for the Application of Component Surge-Protective Devices for Use in Low-Voltage [Equal to or Less than 1000 V (ac) Or 1200 V (dc)] Circuits

IEEE Std C62.45-2002, IEEE Recommended Practice on Surge Testing for Equipment Connected to Low-Voltage (1000 V and Less) AC Power Circuits.

IEEE Std C62.92.2-2017, IEEE Guide for the Application of Neutral Grounding in Electric Utility Systems, Part II – Grounding of Synchronous Generator Systems

IEEE Std C62.92.6-2017, IEEE Guide for the Application of Neutral Grounding in Electric Utility Systems, Pat VI

IEEE Std 32-1972 (Reaff 1990), IEEE Standard Requirements, Terminology, and Test Procedure for Neutral Grounding Devices

IEEE Std 141-1993, IEEE Recommended Practice for Electric Power Distribution for Industrial Plants – Red Book

IEEE Std 142-2007, IEEE Recommended Practice for Grounding of Industrial and Commercial Power Systems – Green Book

IEEE Std 242-2001, Recommended Practice for Protection and Coordination of Industrial and Commercial Power Systems

IEEE Std 446-1995, Recommended Practice for Emergency and Standby Power Systems for Industrial and Commercial Applications

Updated by 10.23.25 Order

IEEE Std 2030-2011, Guide for Smart Grid Interoperability of Energy Technology and Information Technology Operation with the Electric Power System (EPS), End-Use Applications, and Loads

IEEE Std 2030.5-2013, IEEE Adoption of Smart Energy Profile 2.0 Application Protocol Standard.

IEEE Std 1815-2012, IEEE Standard for Electric Power Systems Communications-Distributed Network Protocol (DNP3)

ANSI C84.1-2016, Electric Power Systems and Equipment – Voltage Ratings (60 Hertz)

UL 1741, Edition Three (September 28, 2021), Inverters, Converters, Controllers and Interconnection System Equipment for Use With Distributed Energy Resources

ANSI C2-2007, National Electrical Safety Code, Published by the Institute of Electrical and Electronics Engineers, Inc.

NFPA 70, National Electrical Code, Published by the National Fire Protection Association

IEC 61850-7-420:2009, Communication networks and systems for power utility automation - Part 7-420: Basic communication structure - Distributed energy resources logical nodes

IEC 62351-12:2016, Power systems management and associated information exchange - Data and communications security - Part 12: Resilience and security recommendations for power systems with distributed energy resources (DER) cyber-physical systems

UL 3141, Testing and Conformity for Power Control Systems (PCS)

Updated by 10-25-26 Order

Attachment 5: Certification of Distributed Energy Resource Equipment

1.0 Distributed Energy Resource (DER) equipment proposed for use in an interconnection system shall be considered certified for interconnected operation if: 1) it has been tested in accordance with industry standards for continuous utility interactive operation in compliance with the appropriate codes and standards referenced below by any Nationally Recognized Testing Laboratory (NRTL) recognized by the United States Occupational Safety and Health Administration to test and certify interconnection equipment pursuant to the relevant codes and standards listed in MN DIP Attachment 4, 2) it has been labeled and is publicly listed by such NRTL at the time of the interconnection application, and 3) such NRTL makes readily available for verification all test standards and procedures it utilized in performing such equipment certification, and, with consumer approval, the test data itself. The NRTL may make such information available on its website and by encouraging such information to be included in the manufacturer's literature accompanying the equipment.

2.0 The Interconnection Customer must verify that the assembly and use of the equipment falls within the use or uses for which the equipment was tested, labeled, and listed by the NRTL.

3.0 Certified equipment shall not require further type-test review, testing, or additional equipment to meet the requirements of this interconnection procedure; however, nothing herein shall preclude the need for a DER Design Evaluation or an on-site commissioning test by the parties to the interconnection as provided for in the Minnesota Technical Requirements.

4.0 If the certified equipment package includes only interface components (switchgear, inverters, or other interface devices), then an Interconnection Customer must show that the generator or other electric source being utilized with the equipment package is compatible with the equipment package and is consistent with the testing and listing specified for this type of interconnection equipment.

5.0 Provided the generator or electric source, when combined with the equipment package, is within the range of capabilities for which it was tested by the NRTL, and does not violate the interface components' labeling and listing performed by the NRTL, no further type-test review, testing or additional equipment on the customer side of the Point of Common Coupling shall be required to be considered certified for the purposes of this interconnection procedure; however, nothing herein shall preclude the need for a DER Design Evaluation or an on-site commissioning test by the parties to the interconnection as provided for in the Minnesota Technical Requirements.

6.0 An equipment package does not include equipment provided by the Area EPS.

Updated by 10-22-26 Order

Attachment 6: System Impact Study Agreement

THIS AGREEMENT is made and entered into this _____day of_____

20___ by and between_____,

a_____ organized and existing under the laws of the State of

_____, ("Interconnection Customer"), and

_____, a_____ existing under the laws of the State of Minnesota, ("Area EPS Operator"). Interconnection Customer and Area EPS Operator each may be referred to as a "Party," or collectively as the "Parties."

RECITALS

WHEREAS, the Interconnection Customer is proposing to develop a Distributed Energy Resource (DER) or generating capacity addition to an existing DER consistent with the Interconnection Application completed by the Interconnection Customer on_____; and

WHEREAS, the Interconnection Customer desires to interconnect the DER with the Area EPS Operator's electric system;

WHEREAS, the Interconnection Customer has requested the Area EPS Operator to perform a system impact study(s) to assess the impact of interconnecting the DER with the Area EPS Operator's electric System, and potential Affected System(s);

NOW, THEREFORE, in consideration of and subject to the mutual covenants contained herein the Parties agreed as follows:

1.0 When used in this Agreement, with initial capitalization, the terms specified shall have the meanings indicated or the meanings specified in the standard Minnesota Distributed Energy Resources Interconnection Procedures (MN DIP.)

2.0 The Interconnection Customer elects and the Area EPS Operator shall cause to be performed a system impact study(s) consistent with the MN DIP. The scope of a system impact study shall be subject to the assumptions set forth in this Agreement; including **Attachment A**.

3.0 A system impact study will be based upon the technical information provided by Interconnection Customer in the Interconnection Application. The Area EPS Operator reserves the right to request additional technical information from the Interconnection Customer as may reasonably become necessary consistent with Good Utility Practice during the course of the system impact study.

Updated by 10.23.26 Order

4.0 A system impact study may, as necessary, consist of a short circuit analysis, a stability analysis, a power flow analysis, voltage drop and flicker studies, protection and set point coordination studies, and grounding reviews. A system impact study shall state the assumptions upon which it is based, state the results of the analyses, and provide the requirement or potential impediments to providing the requested interconnection service, including a preliminary indication of the cost and length of time that would be necessary to correct any problems identified in those analyses and implement the interconnection. The system impact study shall take into account the proposed DER's design and operating characteristics, and study the project according to how the project is proposed to be operated. If the DER limits export pursuant to MN DIP Section 5.14.3, the system impact study shall use Export Capacity instead of the Nameplate Rating, except when assessing fault current contribution or Inadvertent Export. To assess fault current contribution, the system impact study shall use the rated fault current; for example, the Customer may provide manufacturer test data (pursuant to the fault current test described in IEEE 1547.1-2020 clause 5.18) showing that the fault current is independent of the Nameplate Rating. If the study described above shows the need for upgrades, the Area EPS Operator may perform additional studies to identify mutually beneficial alternatives to the operating characteristics of the proposed DER(s).A system impact study shall provide a list of facilities that are required as a result of the Interconnection Application and non-binding good faith estimates of cost responsibility and time to construct.

5.0 A distribution system impact study shall incorporate a distribution load flow study, an analysis of equipment interrupting ratings, protection coordination study, voltage drop and flicker studies, protection and set point coordination studies, grounding reviews, and the impact on electric system operation, as necessary.

6.0 Affected Systems may participate in the preparation of a system impact study, with a division of costs among such entities as they may agree. All Affected Systems shall be afforded an opportunity to review and comment upon a system impact study that covers potential adverse system impacts on their electric systems.

7.0 If the Area EPS Operator uses a queuing procedure for sorting or prioritizing projects and their associated cost responsibilities for any required Network Upgrades, the system impact study shall consider all Distributed Energy Resources (and with respect to paragraph 7.3 below, any identified Upgrades associated with such higher queued interconnection) that, on the date the system impact study is commenced _

7.1. Are directly interconnected with the Area EPS Operator’s electric system; or

7.2. Are interconnected with Affected Systems and may have an impact on the proposed interconnection; and

Updated by 10-23-26 Order

7.3. Have a pending higher queued Interconnection Application to interconnect with the Area EPS Operator's electric system.

8.0 A deposit of the equivalent of the good faith estimated cost of a distribution system impact study and the good faith estimated cost of a transmission system impact study shall be required from the Interconnection Customer when the signed Agreement is provided to the Area EPS Operator.

9.0 Any study fees shall be based on the Area EPS Operator's actual costs and will be invoiced to the Interconnection Customer within 20 Business Days after the study is completed and delivered and will include a summary of professional time.

10.0 The Interconnection Customer must pay any study costs that exceed the deposit without interest within 20 Business Days on receipt of the invoice or resolution of any dispute. If the deposit exceeds the invoiced fees, the Area EPS Operator shall refund such excess within 20 Business Days of the invoice without interest.

11.0 Governing Law, Regulatory Authority, and Rules

The validity, interpretation and enforcement of this Agreement and each of its provisions shall be governed by the laws of the state of Minnesota. This Agreement is subject to all Applicable Laws and Regulations. Each Party expressly reserves the right to seek changes in, appeal, or otherwise contest any laws, orders, or regulations of a Governmental Authority.

12.0 Amendment

The Parties may amend this Agreement by a written instrument duly executed by both Parties.

13.0 No Third-Party Beneficiaries

This Agreement is not intended to and does not create rights, remedies, or benefits of any character whatsoever in favor of any persons, corporations, associations, or entities other than the Parties, and the obligations herein assumed are solely for the use and benefit of the Parties, their successors in interest and where permitted, their assigns.

14.0 Waivers

14.1. The failure of a Party to this Agreement to insist, on any occasion, upon strict performance of any provision of this Agreement will not be considered a waiver of any obligation, right, or duty of, or imposed upon, such Party.

14.2. Any waiver at any time by either Party of its rights with respect to this Agreement shall not be deemed a continuing waiver or a waiver with respect to any other

Updated by 10-23-26 Order

failure to comply with any other obligation, right, duty of this Agreement. Termination or default of this Agreement for any reason by Interconnection Customer shall not constitute a waiver of the Interconnection Customer's legal rights to obtain an interconnection from the Area EPS Operator. Any waiver of this Agreement shall, if requested, be provided in writing.

15.0 Multiple Counterparts

This Agreement may be executed in two or more counterparts, each of which is deemed an original but all constitute one and the same instrument. Electronic signatures are acceptable if the Area EPS Operator has made such a determination pursuant to MN DIP 1.2.1.1.

16.0 No Partnership

This Agreement shall not be interpreted or construed to create an association, joint venture, agency relationship, or partnership between the Parties or to impose any partnership obligation or partnership liability upon either Party. Neither Party shall have any right, power or authority to enter into any agreement or undertaking for, or act on behalf of, or to act as or be an agent or representative of, or to otherwise bind, the other Party.

17.0 Severability

If any provision or portion of this Agreement shall for any reason be held or adjudged to be invalid or illegal or unenforceable by any court of competent jurisdiction or other Governmental Authority, (1) such portion or provision shall be deemed separate and independent, (2) the Parties shall negotiate in good faith to restore insofar as practicable the benefits to each Party that were affected by such ruling, and (3) the remainder of this Agreement shall remain in full force and effect.

18.0 Subcontractors

Nothing in this Agreement shall prevent a Party from utilizing the services of any subcontractor as it deems appropriate to perform its obligations under this Agreement; provided, however, that each Party shall require its subcontractors to comply with all applicable terms and conditions of this Agreement in providing such services and each Party shall remain primarily liable to the other Party for the performance of such subcontractor.

18.1. The creation of any subcontract relationship shall not relieve the hiring Party of any of its obligations under this Agreement. The hiring Party shall be fully responsible to the other Party for the acts or omissions of any subcontractor the hiring Party hires as if no subcontract had been made; provided, however, that in

Updated by 10.23.26 Order

no event shall the Area EPS Operator be liable for the actions or inactions of the Interconnection Customer or its subcontractors with respect to obligations of the Interconnection Customer under this Agreement. Any applicable obligation imposed by this Agreement upon the hiring Party shall be equally binding upon, and shall be construed as having application to, any subcontractor of such Party.

18.2. The obligations under this article will not be limited in any way by any limitation of subcontractor's insurance.

19.0 Inclusion of Area EPS Operator Tariffs and Rules

The interconnection services provided under this Agreement shall at all times be subject to the terms and conditions set forth in the tariff schedules and rules applicable to the electric service provided by the Area EPS, which tariff schedules and rules are hereby incorporated into this Agreement by this reference. Notwithstanding any other provisions of this Agreement, the Area EPS Operator shall have the right to unilaterally file with the Minnesota Public Utilities Commission, pursuant to the Commission's rules and regulations, an application for change in rates, charges, classification, service, tariff, or rule or any agreement relating thereto. The Interconnection Customer shall also have the right to unilaterally file with the Minnesota Public Utilities Commission, pursuant to the Commission's rules and regulations, an application for change in rates, charges, classification, service, tariff, or rule or any agreement relating thereto. Each Party shall be have the right to protest any such filing by the other Party and/or to participate fully in any proceeding before the Minnesota Public Utilities Commission in which such modifications may be considered, pursuant to the Commission's rules and regulations.

IN WITNESS THEREOF, the Parties have caused this Agreement to be duly executed by their duly authorized officers or agents on the day and year first above written.

[Insert name of Area EPS Operator] [Insert name of Interconnection Customer]

_____ _____

Signed: _____ Signed: _____

Name (Printed): Name (Printed):

_____ _____

Title: _____ Title: _____

Updated by 10.23.26 Order

Attachment 6: System Impact Study Agreement (cont'd)

Attachment A

Assumptions Used in Conducting the System Impact Study

The system impact study shall be based upon the following assumptions:

1) Designation of Point of Common Coupling and configuration to be studied.

2) Designation of alternative Points of DER Interconnection and configuration.

1) and 2) are to be completed by the Interconnection Customer. Other assumptions (listed below) are to be provided by the Interconnection Customer and the Area EPS Operator. The Area EPS Operator shall use the Reference Point for Applicability which is either the Point of Common Coupling or the Point(s) of DER Interconnection as described in IEEE 1547.

Additional DER technical data required for System Impact Study

If applicable, the Area EPS Operator shall list below any additional technical data that is required to adequately perform the System Impact Study. As indicated in MN DIP section 4.3.3, this information is to be returned with the signed system impact study agreement and deposit.

Updated by 10.23.26 Order

Attachment 7: Facilities Study Agreement

THIS AGREEMENT is made and entered into this _____day of_____

20___ by and between_____,

a _____organized and existing under the laws of the State of

_____, ("Interconnection Customer,") and

_____, a_____

existing under the laws of the State of_____,

("Area EPS Operator"). Interconnection Customer and Area EPS Operator each may be referred to as a "Party," or collectively as the "Parties."

RECITALS

WHEREAS, the Interconnection Customer is proposing to develop a Distributed Energy Resource or generating capacity addition to an existing Distributed Energy Resource consistent with the Interconnection Application completed by the Interconnection Customer on_____; and

WHEREAS, the Interconnection Customer desires to interconnect the Distributed Energy Resource with the Area EPS Operator's Distribution System;

WHEREAS, the Area EPS Operator has completed Initial Review, Supplemental Review, and/or a system impact study and provided the results of said review to the Interconnection Customer, or determined none was required; and

WHEREAS, the Interconnection Customer has requested the Area EPS Operator to perform a facilities study to specify, and estimate the cost of, the equipment, engineering, procurement and construction work needed to implement the conclusions of the above noted review in accordance with Good Utility Practice to physically and electrically connect the Distributed Energy Resource with the Area EPS Operator's Distribution System.

NOW, THEREFORE, in consideration of and subject to the mutual covenants contained herein the Parties agreed as follows:

1.0 When used in this Agreement, with initial capitalization, the terms specified shall have the meanings indicated or the meanings specified in the standard State of Minnesota Distributed Energy Resources Interconnection Procedures (MN DIP).

Updated By 10.23.26 Order

2.0 The Interconnection Customer elects and the Area EPS Operator shall cause a facilities study consistent with the standard MN DIP to be performed. The scope of the facilities study shall be subject to data provided in Attachment A to this Agreement.

3.0 The facilities study shall specify and estimate the cost of the equipment, engineering, procurement and construction work (including overheads) needed to implement the conclusions of the system impact study(s). The facilities study shall also identify: 1) the electrical switching configuration of the equipment, including, without limitation, transformer, switchgear, meters, and other station equipment, 2) the nature and estimated cost of the Area EPS Operator's Interconnection Facilities and Upgrades necessary to accomplish the interconnection, and 3) an estimate of the time required to complete the construction and installation of such facilities.

4.0 The Area EPS Operator may propose to group facilities required for more than one Interconnection Customer in order to minimize facilities costs through economies of scale, but any Interconnection Customer may require the installation of facilities required for its own Distributed Energy Resource if it is willing to pay the costs of those facilities.

5.0 A deposit of the good faith estimate of the facilities study costs shall be required from the Interconnection Customer and provided when the signed Agreement is provided to the Area EPS Operator.

6.0 Any study fees shall be based on the Area EPS Operator's actual costs and will be invoiced to the Interconnection Customer within 20 Business Days after the study is completed and delivered and will include a summary of professional time.

7.0 The Interconnection Customer must pay any study costs that exceed the deposit without interest within 20 Business Days on receipt of the invoice or resolution of any dispute. If the deposit exceeds the invoiced fees, the Area EPS Operator shall refund such excess within 20 Business Days of the invoice without interest.

8.0 Governing Law, Regulatory Authority, and Rules

The validity, interpretation and enforcement of this Agreement and each of its provisions shall be governed by the laws of the state of Minnesota. This Agreement is subject to all Applicable Laws and Regulations. Each Party expressly reserves the right to seek changes in, appeal, or otherwise contest any laws, orders, or regulations of a Governmental Authority.

9.0 Amendment

The Parties may amend this Agreement by a written instrument duly executed by both Parties.

Updated by 10.23.26 Order

10.0 No Third-Party Beneficiaries

This Agreement is not intended to and does not create rights, remedies, or benefits of any character whatsoever in favor of any persons, corporations, associations, or entities other than the Parties, and the obligations herein assumed are solely for the use and benefit of the Parties, their successors in interest and where permitted, their assigns.

11.0 Waiver

11.1 The failure of a Party to this Agreement to insist, on any occasion, upon strict performance of any provision of this Agreement will not be considered a waiver of any obligation, right, or duty of, or imposed upon, such Party.

11.2 Any waiver at any time by either Party of its rights with respect to this Agreement shall not be deemed a continuing waiver or a waiver with respect to any other failure to comply with any other obligation, right, duty of this Agreement. Termination or default of this Agreement for any reason by Interconnection Customer shall not constitute a waiver of the Interconnection Customer's legal rights to obtain an interconnection from the Area EPS Operator. Any waiver of this Agreement shall, if requested, be provided in writing.

12.0 Multiple Counterparts

This Agreement may be executed in two or more counterparts, each of which is deemed an original but all constitute one and the same instrument. Electronic signatures are acceptable if the Area EPS Operator has made such a determination pursuant to MN DIP 1.2.1.1.

13.0 No Partnership

This Agreement shall not be interpreted or construed to create an association, joint venture, agency relationship, or partnership between the Parties or to impose any partnership obligation or partnership liability upon either Party. Neither Party shall have any right, power or authority to enter into any agreement or undertaking for, or act on behalf of, or to act as or be an agent or representative of, or to otherwise bind, the other Party.

14.0 Severability

If any provision or portion of this Agreement shall for any reason be held or adjudged to be invalid or illegal or unenforceable by any court of competent jurisdiction or other Governmental Authority, (1) such portion or provision shall be deemed separate and independent, (2) the Parties shall negotiate in good faith to restore insofar as practicable the benefits to each Party that were affected by such ruling, and (3) the remainder of this Agreement shall remain in full force and effect.

Updated by 10.23.26 Order

15.0 Subcontractors

Nothing in this Agreement shall prevent a Party from utilizing the services of any subcontractor as it deems appropriate to perform its obligations under this Agreement; provided, however, that each Party shall require its subcontractors to comply with all applicable terms and conditions of this Agreement in providing such services and each Party shall remain primarily liable to the other Party for the performance of such subcontractor.

15.1 The creation of any subcontract relationship shall not relieve the hiring Party of any of its obligations under this Agreement. The hiring Party shall be fully responsible to the other Party for the acts or omissions of any subcontractor the hiring Party hires as if no subcontract had been made; provided, however, that in no event shall the Area EPS Operator be liable for the actions or inactions of the Interconnection Customer or its subcontractors with respect to obligations of the Interconnection Customer under this Agreement. Any applicable obligation imposed by this Agreement upon the hiring Party shall be equally binding upon, and shall be construed as having application to, any subcontractor of such Party.

15.2 The obligations under this article will not be limited in any way by any limitation of subcontractor's insurance.

16.0 Inclusion of Area EPS Operator Tariffs and Rules

The interconnection services provided under this Agreement shall at all times be subject to the terms and conditions set forth in the tariff schedules and rules applicable to the electric service provided by the Area EPS, which tariff schedules and rules are hereby incorporated into this Agreement by this reference. Notwithstanding any other provisions of this Agreement, the Area EPS Operator shall have the right to unilaterally file with the MPUC, pursuant to the MPUC's rules and regulations, an application for change in rates, charges, classification, service, tariff, or rule or any agreement relating thereto. The Interconnection Customer shall also have the right to unilaterally file with the MPUC, pursuant to the MPUC's rules and regulations, an application for change in rates, charges, classification, service, tariff, or rule or any agreement relating thereto. Each Party shall be have the right to protest any such filing by the other Party and/or to participate fully in any proceeding before the MPUC in which such modifications may be considered, pursuant to the MPUC's rules and regulations.

17.0 Data to be provided by the Interconnection Customer with the Facilities Study Agreement

17.1 The Interconnection Customer shall be available to meet on site with the Area EPS Operator within 5 Business Days of signing the Facilities Study Agreement. The personnel furnished by the Interconnection Customer for this site meeting

Updated by 10.23.26 Order

shall bring detailed information on the site layout. The Area EPS Operator may request the Interconnection Customer physically places stakes at the location of the major components.[13]

17.2 The Interconnection Customer shall furnish a final site plan detailing the location of major equipment at the time this agreement is returned. The Point of Common Coupling (PCC) and Point of DER Connection (PoC) shall be clearly marked. The site plan shall depict any nearby roads and be labeled with the road name. Accurate dimensions shall be included on the site plan. The proper emergency (911) address, corresponding to the site, shall be labeled on the site plan.

17.3 The Interconnection Customer shall furnish a final one-line diagram detailing the electrical connections between major components. The one-line shall be returned with the signed Facilities Study Agreement.

17.4 Technical cut sheets on all equipment related to metering shall be provided by the Interconnection Customer along with the signed Facilities Study Agreement.

17.5 If available, copies of Conditional Use Permit(s) from all necessary authorities shall be returned by the Interconnection Customer with the signed Facilities Study Agreement.

17.6 The Interconnection Customer shall secure any necessary easements from private land owners prior to signing the Facilities Study Agreement. Documentation of any such agreements shall be provided to the Area EPS Operator.

17.7 In the event that the Area EPS Operator determines a site survey is necessary in order to complete a Facilities Study, the Interconnection Customer shall make good faith efforts to complete the site survey in a timely manner.

17.8 The Facilities Study assumes all land use permits required for the interconnection will be approved by the proper authorities. Permits are submitted after the Interconnection Agreement is signed and may impact project costs (i.e. overhead to underground requirement.)

17.9 The Interconnection Customer and Area EPS Operator shall provide a single point of contact for design and construction related matters. The Interconnection Customer single point of contact shall respond in a timely manner to Area EPS Operator questions during the Facilities Study.

[13] Examples of major components include, but are not limited to, interconnection transformers, breakers, fuses, reclosers, meters, current transformers (CTs), potential transformers (PTs), switch cabinets, inverters.

Updated by 10 23 26 Order

17.10 In the event that an Interconnection Customer does not provide the necessary information described in this agreement, or if the Interconnection Customer takes more than five (5) Business Days to respond to a question during the Facilities Study, the Facilities Study timeframe shall pause until the question is resolved.

IN WITNESS WHEREOF, the Parties have caused this Agreement to be duly executed by their duly authorized officers or agents on the day and year first above written.

[Insert name of Area EPS Operator] [Insert name of Interconnection Customer]

_____ _____

Signed_____ Signed_____

Name (Printed): Name (Printed):

_____ _____

Title_____ Title_____

Updated by 10.23.26 Order

Attachment 8 Rates

State of Minnesota

Guidelines for Establishing the Terms of the Financial Relationship Between an Electric Utility and a Distributed Generation Customer with No More Than 10 MW of Capacity

The Commission recognizes Attachment 6[14] offers guidance for distributed energy resource rates under multiple state statutes (e.g. Minn. Stat. 216B.03, .1611, .164, .1641, .1691) and, when applicable, is to be applied consistent with PURPA. Rate-regulated utilities' tariffed rates are reviewed by the Commission consistent with all relevant state and federal statutes, rules, and orders.

1. AVAILABILITY

   The DG customer must connect in parallel to the utility distribution system.

2. QUALIFICATIONS

   a. The DG facility must be an operable, permanently installed or mobile generation facility serving the customer receiving retail electric service at the same site.
   b. Must buy: The utility must buy all the energy offered for sale by the DG customer selling the power. Utilities that are full requirements customers of wholesale suppliers may need to require the wholesale supplier to assume this obligation in order to abide by the contractual requirements with their wholesale supplier.
   c. Customer options: Customer may sell all the DG energy to the utility, "sell" all the DG energy to itself, or self-generate part of its needs and sell the remaining energy to the utility.
   d. Transactions outside the tariff: DG owners and utilities may pursue reasonable transactions outside the DG tariff. However, such transactions are beyond the scope of the work group.

3. LIST OF SUPPLY SERVICES TO BE PRICED

   a. Energy and capacity
   b. Scheduled maintenance service (energy, or energy and capacity, supplied by the utility during schedule maintenance of the customer's non-utility source of electric energy supply).
   c. Unscheduled outages (energy, or energy and capacity, supplied by the utility during outages of the customer's non-utility source of electric energy supply).
   d. Supplemental service (electric energy, or energy and capacity, supplied by the utility to the DG customer when the customer's non-utility source of electricity is insufficient to meet the customer's own load).

[14] This attachment was formally attachment 6 from the September 28, 2004 Order: Minnesota's Statewide Interconnection Process and Technical Requirements

Updated by 10.23.26 Order

e. Other services deemed necessary.

4. PRINCIPLE OF SETTING RATES FOR SERVICES PROVIDED BY DG CUSTOMERS TO UTILITIES

Rates should reflect the value of the distributed generation to the utility, including any reasonable credits for emissions or for costs avoided on the generation, transmission, and/or distribution system.

5. PRINCIPLE OF SETTING RATES

Rates should reflect the costs utility expects to avoid. To the extent practical, these costs should reflect seasonal and peak/off-peak differences in costs.

6. CALCULATION OF AVOIDED COSTS

a. Avoided Energy Costs

Distribution utilities that are full requirements customers of wholesale suppliers may use their suppliers' rate schedules to determine avoided energy costs. Other utilities should follow these steps:

i. System-wide hourly marginal energy costs are calculated with a production model for each hour of the future year.
ii. Based on these costs, the average on-peak and off-peak marginal energy costs are calculated for each month.
iii. The on-peak monthly rate is set at the average monthly on-peak marginal energy costs. The off-peak monthly energy rate is set at the average monthly off-peak marginal costs. Thus, there are 24 rates set for the year, with an on-peak and off-peak rate set for every month.
iv. A trail period is proposed to see whether, in practice, utilities are able to forecast these energy prices sufficiently well. Depending on the trial results, a lump sum true-up may be used at the end of each year to reflect the difference between actual and estimated energy bills.

b. Avoided Capacity Costs

i. Calculate the installed capital cost plus fixed O&M costs plus startup costs ($/kW-year). If the next (marginal) unit is from a competitive bid, the utility must estimate these costs and fully defend the estimate.
ii. Calculate the Levelized Annual Revenue Requirements (LARR) ($/kW-year).
iii. Divide the amount in (ii) for the next year by twelve to get the capacity marginal costs ($/kW-month).
iv. These marginal costs must be escalated annually by the expected inflation rate.
(1) The need for capacity is established in the utility's most recent integrated resource plan (IRP). A need exists if the utility shows a deficit at any year of the 5-year planning period.

Updated by 10-25-26 Order

(2) Capacity payments should be made for the totally fully accredited DG capacity, regardless of when the power is delivered to the system.
(3) The expected life of a capacity addition is the expected life of the specific capacity addition from the utility's most recently approved integrated resource plan.
(4) If the contract to purchase power from a DG source begins at the time the utility needs the capacity, then the full capacity payment is made, adjusting only as needed for the length of the contract (i.e., there is no discount for adding capacity sooner than it is needed).
(5) The formula for adjustments to capacity payments is:

$$A2 = \frac{(1+i)^m - 1}{(1+i)^n - 1} \times \frac{(1-i)^{n-a} - (1+e)^{n-a}}{(1+i)^m - (1+e)^m} \times A1$$

Where:

A1= Levelized annual value of a capacity purchase at the time of need.

A2= Levelized annual value of the capacity paid for in a power purchase contract.

m= Expected lifetime of ordinary (alternative) future capacity addition.

n= Length of power purchase contract.

i= Utility Cost of Capital.

e= Escalation rate affecting value of new capacity additions.

a= Length of time between beginning of contract and time of need for capacity.

7. STANDBY RATES

a. General

i. DG customers do not have to buy standby power. However, if standby power is not purchased, it may not be available.
ii. DG customers do not have to buy as much standby power as necessary to equal the full amount of their own DG capacity. However, if, for example, the customer has a 5 MW DG Facility and buys only 2 MW of standby power, there must be a guarantee that the facility will never take more than 2 MW of standby service.

b. Firm Service

i. Generation (capacity): The monthly reservation fees are equal to the percentage of the planned reserve margin of the utility times the applicable capacity tariffed rates.

Updated by 10.23.26 -der

ii. Transmission: Terms, conditions, and charges for transmission service are subject to the individual utilities' or MISO's Open Access Transmission Tariffs or their successors as approved by the FERC.
iii. Local Distribution: The monthly charges equal the monthly charge under the applicable distribution charge. There is no discount in the local distribution charge.

c. Non-Firm Service

i. Generation (energy and capacity): There are no monthly reservation fees for energy and capacity for a non-firm DG customer.
ii. Transmission: There are no monthly reservation fees for transmission for a non-firm DG customer.
iii. Local Distribution: The monthly rates equal the monthly charge under the applicable distribution charges. That is, there is no discount on the distribution charge.

d. Physical Assurance Customer

A physical assurance customer is a customer who agrees not to require standby services and has a mechanical device to ensure that standby service is not taken. The cost of the mechanical device, which must be reasonable, is to be paid by the DG customer. A utility's tariff may deal with other issues not addressed here.

e. Maximum Size to Avoid Standby Charge

A DG facility of 100 kW or less is exempted from paying any standby charges. The Commission will review this guideline within 24 months.

8. CREDITS

a. General

Credits should be given to a DG customer if the installation of a DG Facility reduces the utility's costs of providing the service. These lower costs could be generation, transmission, or distribution related costs.

b. Distribution Credits

i. Distribution credits to a DG customer should equal the utility's avoided distribution costs resulting from the installation of the DG facility.
ii. Each utility should provide, upon request, a list of substation areas or feeders that could be likely candidates for distribution credits as determined through the utility's normal distribution planning process.
iii. Upon receiving a DG application, the utility will perform an initial screening study to determine if the DG project has the potential to receive distribution credits. The DG customer is responsible for the cost of such a screening study.

Updated by 10.29.26 Order

iv. If the utility's study shows that there exists potential for distribution credits, the utility must, at its own cost, pursue further study to determine the distribution credit, as part of its annual distribution capacity study.

c. Diversity Credits

No additional diversity credits for energy and capacity should be given to DG customers who contract for standby service.

c. Line Loss Credits

No additional line loss credits (above the credits already included in the avoided cost calculations) should be paid to a DG customer with the following exception: A DG customer may request the utility to provide a specific line loss study and receive additional line loss credits if the study supports such credits. The DG customer is responsible for the cost of the study regardless of the study's outcome.

d. Renewable Credits

A DG customer who installs a renewable DG facility should be paid the avoided cost of "green power" to the extent that installation of the DG facility allows the utility to avoid the need to purchase "green power" elsewhere. Otherwise, a renewable DG facility should be paid the utility's regular avoided costs.

e. Emission Credits

Tradable Emissions: For tradable emissions such as SO2, if a low emission DG facility allows the utility to capture the value of the emission credit, then the DG owner should receive the credit revenues.

A DG Customer may get green credit or an emission credit, but not both.

The Commission's policy regarding the renewable energy credit objective may affect the question of whether it is reasonable for utilities to pay a credit for renewable power at the approved green-price premium even if a utility does not need the green power.

f. Reliability Credits

DG owners should receive no reliability credit beyond what is already incorporated in the standby tariffs.

Updated by 10.23.26 Order

Attachment 9: MN DIP Flow Charts

Updated by 10.23.26 Order

MNDIP Integration Workflow

High Level View – for Public Use
September 2018

Note: Relevant MNDIP Sections are noted parenthetically

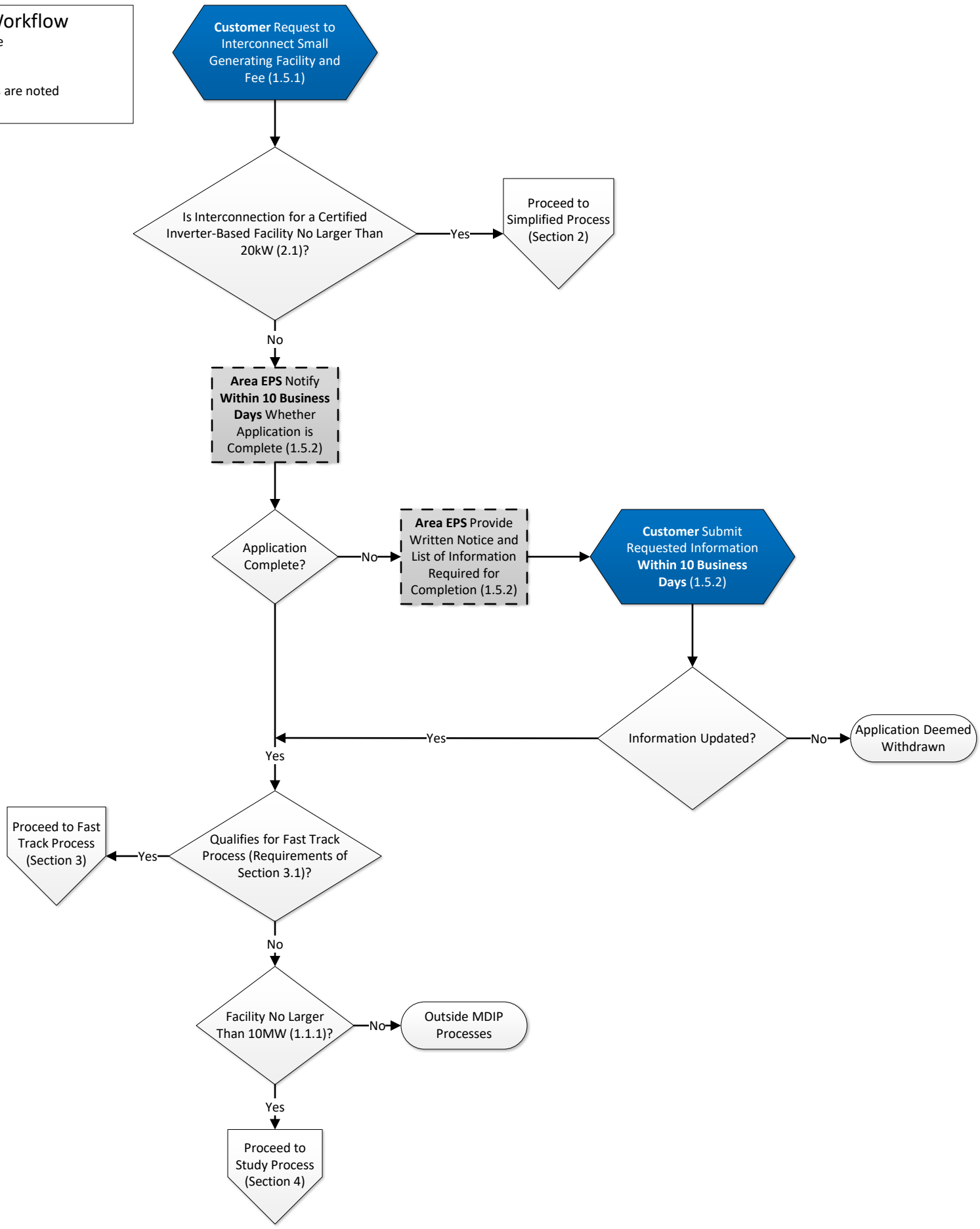

MNDIP Simplified Process Workflow

High Level View – for Public Use
September 2018

Note: Relevant MNDIP Sections are noted parenthetically

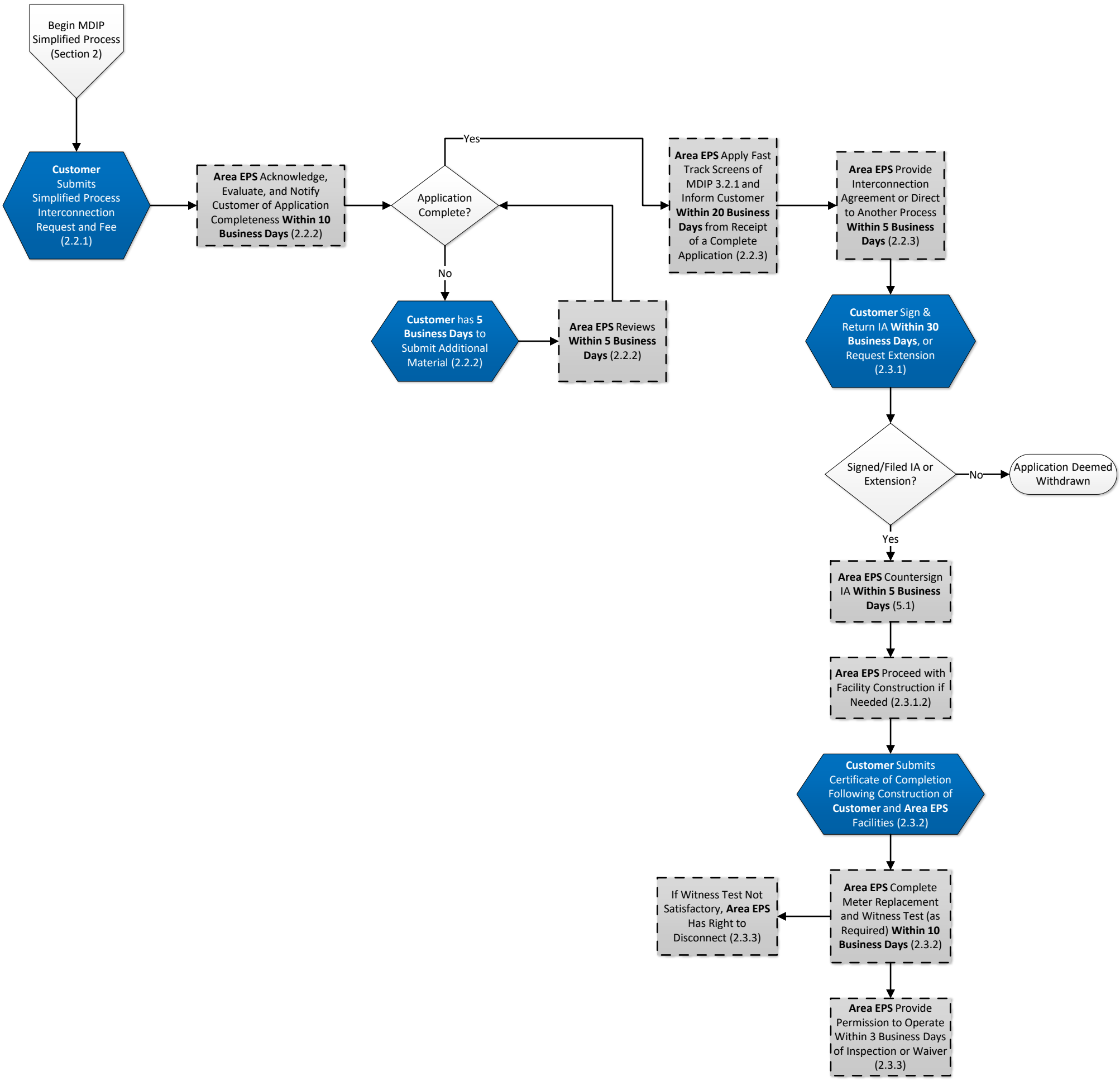

MNDIP Fast Track Process Workflow

High Level View – for Public Use
September 2018

Note: Relevant MNDIP Sections are noted parenthetically

Begin Fast Track Process (Section 3)

Area EPS Perform Initial Review Using Section 3.2.1 Screens **Within 15 Business Days** of Application Deemed Complete (3.2)

Application Passes Screens and/or is Safe to Interconnect (3.2.2)?
- Yes → Construction on **Area EPS** System Needed to Support Interconnection (3.2.2)?
- No → **Area EPS** Notify Customer of Determination and Provide Copies of Analysis and Data Supporting Screen Results (3.3)

Construction on **Area EPS** System Needed to Support Interconnection (3.2.2)?
- Yes → **Area EPS** Notify Customer of Screen Results (3.2.2.2) → **Customer** Decides Whether to Proceed **Within 5 Business Days** (3.2.2.2) → Proceed with Application?
- No → **Area EPS** Provide IA **Within 5 Business Days** (3.2.2.1)

Proceed with Application?
- Will Not Proceed → Application Deemed Withdrawn
- Proceed → **Area EPS** Elect from Two Options

Area EPS Elect from Two Options
- Option 1 → **Area EPS** Provide IA and Estimate **Within 20 Business Days** (3.2.2.2)
- Option 2 → Proceed to Facility Study

Area EPS Provide IA and Estimate **Within 20 Business Days** (3.2.2.2) → Application Withdrawn? (3.4.1)

Application Withdrawn? (3.4.1)
- No → Proceed to Study Process (Section 4)
- Yes → Application Deemed Withdrawn

Proceed to Study Process (Section 4) → Agreement?

Agreement?
- No → **Area EPS** Offer to Perform Study (3.3.2)
- Yes → Application Deemed Withdrawn

Area EPS Offer to Perform Study (3.3.2) → Agreement?

Area EPS Notify Customer of Determination and Provide Copies of Analysis and Data Supporting Screen Results (3.3) → **Area EPS** and **Customer** Schedule Customer Options Meeting **Within 10 Business Days** of Determination (3.2.3 and 3.3)

Area EPS and **Customer** Schedule Customer Options Meeting **Within 10 Business Days** of Determination (3.2.3 and 3.3) → Two Options

Two Options
- Option 1 → **Area EPS** Offer to Perform Supplemental Review and Provide Estimate (3.3.1) → **Customer** Agreement and Fee for Estimated Costs **Within 15 Business Days** (3.4.1) → Agreement?
- Option 2 → **Area EPS** Offer to Perform Study (3.3.2)

Agreement?
- No → Application Withdrawn? (3.4.1)
- Yes → **Area EPS** Perform Supplemental Review Using Section 3.4.4 **Within 30 Business Days** from Receipt of Deposit, Notify Customer of Screen Results and Provide Copies of Supporting Analysis and Data (3.4.4)

Application Withdrawn? (3.4.1)
- No → Application Deemed Withdrawn
- Yes → Proceed to Study Process (Section 4)

Area EPS Perform Supplemental Review Using Section 3.4.4 **Within 30 Business Days** from Receipt of Deposit, Notify Customer of Screen Results and Provide Copies of Supporting Analysis and Data (3.4.4) → Failure of any Criteria (3.4.4)?

Failure of any Criteria (3.4.4)?
- Yes → **Area EPS** Notify Customer Within 2 Business Days to Obtain Customer Direction (3.4.4)
- No → Failure of any Criteria (3.4.5)?

Area EPS Notify Customer Within 2 Business Days to Obtain Customer Direction (3.4.4) → **Customer** Provides Direction **Within 5 Business Days** (3.4.4) → Continue Evaluation (3.4.4)?

Continue Evaluation (3.4.4)?
- Yes → **Area EPS** Notify Customer of Screen Results and Provide Copies of Supporting Analysis and Data (3.4.4)
- No → Move to Study (3.4.4 or 3.4.6)?

Move to Study (3.4.4 or 3.4.6)?
- Yes → **Customer** Authorize Study **Within 15 Business Days** (3.4.6) → Proceed to Study Process (Section 4)
- No → Application Terminated

Failure of any Criteria (3.4.5)?
- No → Facility Safe to Interconnect (3.4.5)?
- Yes → **Area EPS** Notify Customer of Screen Results and Provide Copies of Supporting Analysis and Data (3.4.4)

Facility Safe to Interconnect (3.4.5)?
- No → Move to Study (3.4.4 or 3.4.6)?
- Yes → Construction of **Area EPS** Facilities Required (3.4.5)?

Construction of **Area EPS** Facilities Required (3.4.5)?
- No → **Area EPS** Provide IA **Within 5 Business Days** (3.4.5)
- Yes → **Customer** Notifies to Proceed **Within 5 Business Days** (3.4.5) → Proceed with Application?

Proceed with Application?
- No → Application Deemed Withdrawn
- Yes → **Area EPS** Elect from Two Options

Area EPS Elect from Two Options
- Option 1 → **Area EPS** Provide IA and Estimate **Within 20 Business Days** (3.4.5.2) → **Customer** Sign & Return IA **Within 30 Business Days**, or Request Extension or Unsigned Filing of IA (5.1)
- Option 2 → Proceed to Study Process (Section 4)

Area EPS Provide IA **Within 5 Business Days** (3.4.5) → **Customer** Sign & Return IA **Within 30 Business Days**, or Request Extension or Unsigned Filing of IA (5.1)

Customer Sign & Return IA **Within 30 Business Days**, or Request Extension or Unsigned Filing of IA (5.1) → Signed/Filed IA or Extension?

Signed/Filed IA or Extension?
- Yes → **Area EPS** Countersign IA **Within 5 Business Days** (5.1.2) → Proceed with Interconnection Process – Design, Construction, Testing, Permission to Operate (5.6 through 5.8)
- No → Application Deemed Withdrawn

MNDIP Study Process Workflow

High Level View – for Public Use
September 2018

Note: Relevant MNDIP Sections are noted parenthetically

Begin Study Process (Section 4)

Study Following Fast Track Initial Screens

Study Following Supplemental Review

Optional **Customer** and **Area EPS** Scoping Meeting **Within 10 Business Days** of Application Complete or Moving Out of Screening Process (4.2)

Hold Scoping Meeting?

Yes

Perform System Impact Study?

No

Proceed to Facility Study?

No

Proceed to IA?

Yes

Area EPS Provide IA **Within 5 Business Days** (5.1)

Customer Sign & Return IA **Within 30 Business Days**, or Request Extension or Unsigned Filing of IA (5.1.2)

Signed/Filed IA or Extension?

No

Application Considered Withdrawn

Yes

Area EPS Countersign IA **Within 5 Business Days** (5.1.2)

Proceed with Interconnection Process – Design, Construction, Testing, Permission to Operate (5.6 through 5.8)

No

Area EPS Provide System Study Agreement (Attachment 6) **Within 10 Business Days** (4.3.2)

Yes

Area EPS Provide System Study Agreement (Attachment 6) **Within 5 Business Days** (4.3.2)

Customer Returns Study Agreement and Fee **Within 20 Business Days** (4.3.4)

Agreement and Fee Received?

Yes

Area EPS Complete System Study **Within 30 Business Days** (4.3.5)

Area EPS Provide Study Results and Facilities Study Agreement (if Needed) **Within 5 Business Days** of System Study Completion (4.3.5)

Transmission System Impacts Identified?

Yes

Area EPS Coordinate Necessary Transmission Study with Transmission Provider **Within 5 Business Days** of Identification (4.3.6)

Customer Returns Transmission Study Agreement **Within 15 Business Days** (4.3.7)

Agreement Received?

No

Application Considered Withdrawn

Yes

Area EPS Coordinate with Transmission Provider and Affected Systems to Provide Transmission Impact Study and Results **in a Timely Manner** (4.3.8)

No

Application Considered Withdrawn

Facility Study Required?

Yes

Area EPS Provide Facilities Study Agreement (Attachment 7) and Cost Estimate **With Prior Study Results or Within 5 Business Days of Scoping Meeting or 10 Business Days if no Scoping Meeting** (4.4)

Customer Returns Study Agreement and Fee **Within 15 Business Days** (4.4.3)

Agreement and Fee Received?

Yes

Facility Upgrades Required?

Yes

Area EPS Complete Facility Study **Within 45 Business Days** and Provide Draft Report (4.4.6 and 4.4.8)

No

Area EPS Complete Facility Study **Within 30 Business Days** and Provide Draft Report (4.4.7 and 4.4.8)

Optional - **Area EPS** and **Customer** Meet **Within 10 Business Days** to Discuss Draft Report (4.4.9)

Customer Provides Written Comments on Draft **Within 20 Business Days** (4.4.10)

Customer Comments?

No

Area EPS Issue Final Report **Promptly** (4.4.11)

Yes

Area EPS Issue Final Report **Within 15 Business Days** (4.4.11)

Area EPS Provide IA **Within 5 Business Days** (5.1)

MNDIP Dispute Process Workflow

High Level View – for Public Use
September 2018

Note: Relevant MNDIP Sections are noted parenthetically

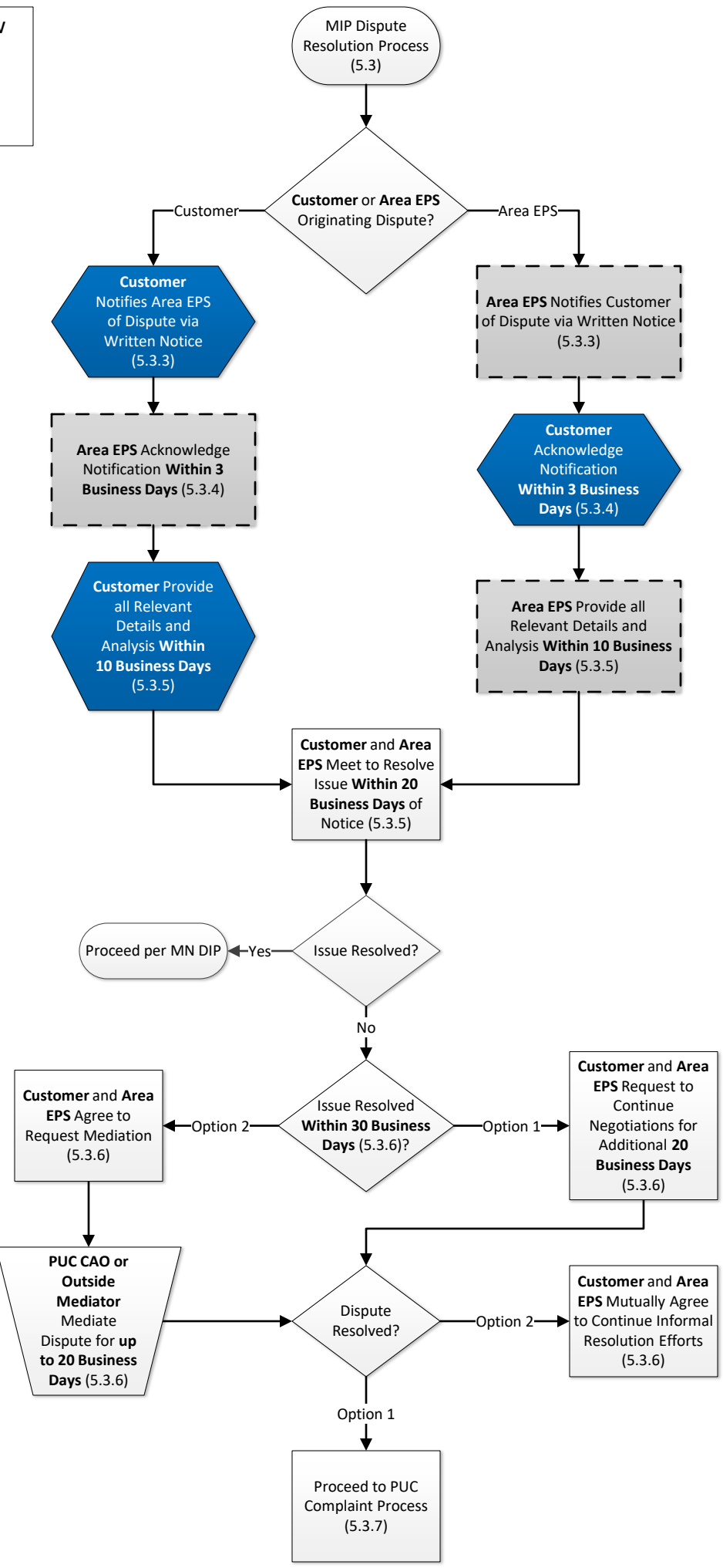

MNDIA Dispute Process Workflow

Detailed View – for Area EPS Internal Use
September 2018

Note: Relevant MNDIA Sections are noted parenthetically

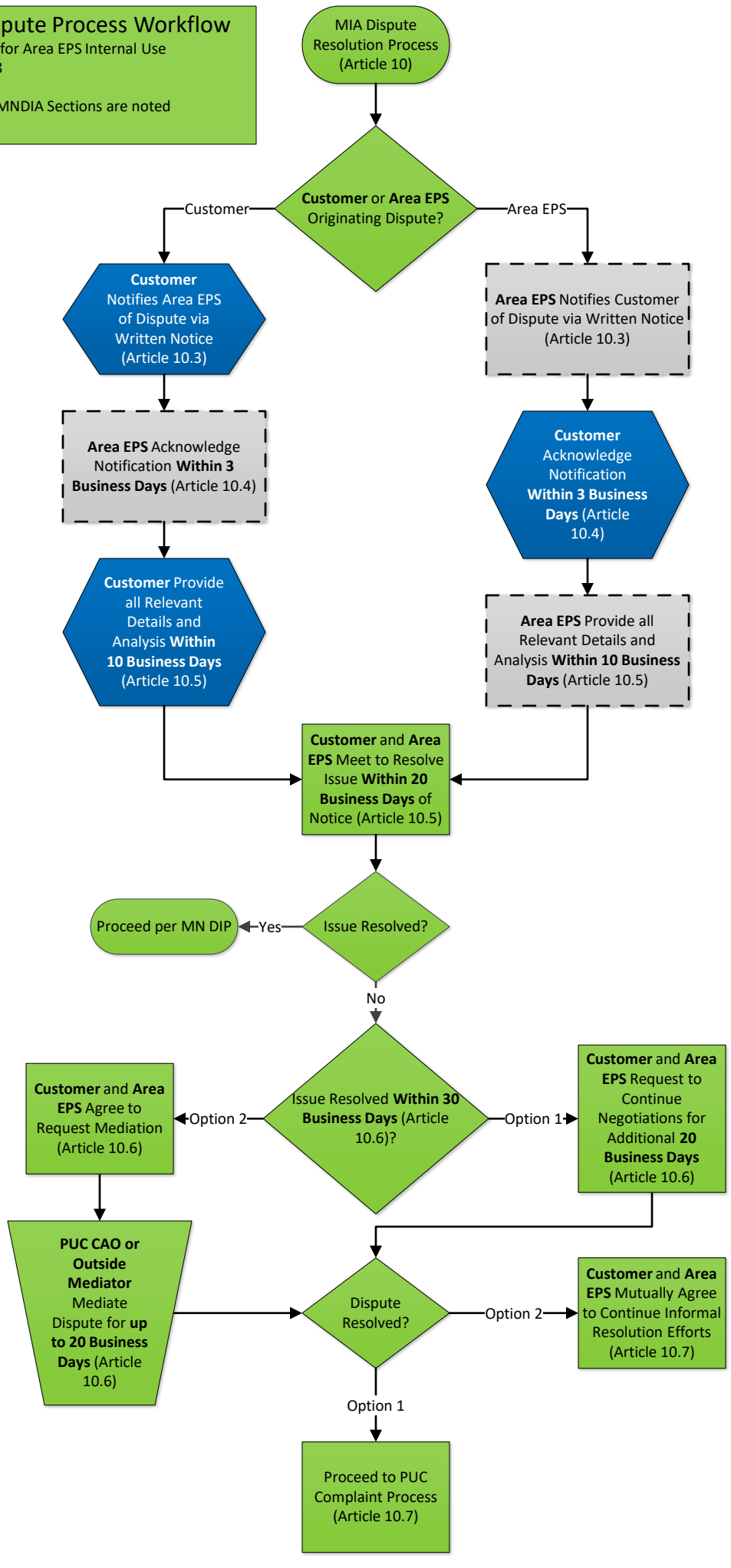

MINNESOTA
PUBLIC UTILITIES COMMISSION

Minnesota Distributed Energy Resource Interconnection Agreement (MN DIA)

V. 2.3

Table of Contents

ARTICLE 1. SCOPE AND LIMITATIONS OF AGREEMENT 4

ARTICLE 2. INSPECTION, TESTING, AUTHORIZATION, AND RIGHT OF ACCESS 6

ARTICLE 3. EFFECTIVE DATE, TERM, TERMINATION, AND DISCONNECTION 7

ARTICLE 4. COST RESPONSIBILITY FOR INTERCONNECTION FACILITIES AND DISTRIBUTION UPGRADES 10

ARTICLE 5. COST RESPONSIBILITY FOR NETWORK UPGRADES 11

ARTICLE 6. BILLING, PAYMENT, MILESTONES, AND FINANCIAL SECURITY 13

ARTICLE 7. ASSIGNMENT, LIABILITY, NON-WARRANTY, INDEMNITY, FORCE MAJEURE, CONSEQUENTIAL DAMAGES, AND DEFAULT 14

ARTICLE 8. INSURANCE 17

ARTICLE 9. CONFIDENTIALITY 17

ARTICLE 10. DISPUTES 19

ARTICLE 11. TAXES 20

ARTICLE 12. MISCELLANEOUS 20

ARTICLE 13. NOTICES 24

ATTACHMENT 1: GLOSSARY OF TERMS 29

ATTACHMENT 2: DESCRIPTION AND COSTS OF THE DISTRIBUTED ENERGY RESOURCE, INTERCONNECTION FACILITIES, AND METERING EQUIPMENT 36

ATTACHMENT 3: ONE-LINE DIAGRAM DEPICTING THE DISTRIBUTED ENERGY RESOURCE, INTERCONNECTION FACILITIES, METERING EQUIPMENT, AND UPGRADES 37

ATTACHMENT 4: MILESTONES 38

ATTACHMENT 5: ADDITIONAL OPERATING AND MAINTENANCE REQUIREMENTS FOR THE AREA EPS OPERATOR'S DISTRIBUTION SYSTEM AND AFFECTED SYSTEMS NEEDED TO SUPPORT THE INTERCONNECTION CUSTOMER'S NEEDS 39

ATTACHMENT 6: AREA EPS OPERATOR'S DESCRIPTION OF DISTRIBUTION AND NETWORK UPGRADES AND GOOD FAITH ESTIMATES OF UPGRADE COSTS 40

ATTACHMENT 7: ASSIGNMENT OF MINNESOTA DISTRIBUTED ENERGY RESOURCE INTERCONNECTION AGREEMENT (MN DIA) 41

This Interconnection Agreement ("Agreement") is made and entered into this _____ day of _____, 20__, by _____

("Area EPS Operator"), and _____

("Interconnection Customer") each hereinafter sometimes referred to individually as "Party" or both referred to collectively as the "Parties."

Area EPS Operator Information

Area EPS Operator: _____

Attention: _____

Address: _____

City: _____ State: _____ Zip: _____

Phone: _____ Email: _____

Interconnection Customer Information

Interconnection Customer: _____

Attention: _____

Address: _____

City: _____ State: _____ Zip: _____

Phone: _____ Email: _____

Interconnection Customer Application No: _____

Distributed Energy Resource Information (To be completed by the Area EPS Operator)

Type of DER System (e.g.Solar, Wind, CHP, Solar+Storage):_____

Nameplate Rating _____(ac) DER capacity (as described in MN DIP 5.14.3)) _____(ac)

Address of DER system:_____

City_____ State MN Zipcode _____

In consideration of the mutual covenants set forth herein, the Parties agree as follows:

1. Article 1. Scope and Limitations of Agreement

1.1. This Agreement is intended to provide for the Interconnection Customer to interconnect at the Point of Common Coupling and operate a Distributed Energy Resource with a Nameplate Rating of 10 Megawatts (MW) or less in parallel with the Area EPS at the location identified above and in the Interconnection Application.

1.2. This Agreement shall be used for all Interconnection Applications submitted under the Minnesota Distributed Energy Resources Interconnection Process (MN DIP) except for those submitted and processed under the Simplified Process contained in MN DIP Section 2 or qualify and chooses under MN DIP Section 1.1.5 for the Uniform Statewide Contract to replace the need for this Agreement.

1.3. This Agreement governs the terms and conditions under which the Interconnection Customer's Distributed Energy Resource will interconnect with, and operate in parallel with, the Area EPS Operator's Distribution System.

1.4. Capitalized terms used herein shall have the meanings specified in the Glossary of Terms in Attachment 1, the MN DIP, or the body of this Agreement.

1.5. This Agreement does not constitute an agreement to purchase or deliver the Interconnection Customer's power. The purchase or delivery of power and other services that the Interconnection Customer may require will be covered under separate agreements, if any. The Interconnection Customer will be responsible for separately making all necessary arrangements (including scheduling) for delivery of electricity with the applicable Area EPS Operator.

1.6. Nothing in this Agreement is intended to affect any other agreement between the Area EPS Operator and the Interconnection Customer.

1.7. <u>Responsibilities of the Parties</u>

1.7.1. The Parties shall perform all obligations of this Agreement in accordance with the MN DIP, Minnesota Technical Requirements, all Applicable Laws and Regulations, Operating Requirements, and Good Utility Practice.

1.7.2. The Interconnection Customer shall construct, interconnect, operate and maintain its Distributed Energy Resource and construct, operate, and maintain its Interconnection Facilities in accordance with the applicable manufacturer's

recommended maintenance schedule and, in accordance with this Agreement, and with Good Utility Practice.

1.7.3. The Area EPS Operator shall construct, operate, and maintain its Distribution System and its Interconnection Facilities in accordance with this Agreement, and with Good Utility Practice.

1.7.4. The Interconnection Customer agrees to construct its facilities or systems in accordance with the Minnesota Technical Requirements and this Agreement; including, applicable specifications that meet or exceed those provided by the National Electrical Safety Code, the American National Standards Institute, IEEE, Underwriter's Laboratory, and Operating Requirements in effect at the time of construction and other applicable national and state codes and standards. The Interconnection Customer agrees to design, install, maintain, and operate its Distributed Energy Resource so as to reasonably minimize the likelihood of a disturbance adversely affecting or impairing the system or equipment of the Area EPS Operator and any Affected Systems.

1.7.5. Each Party shall operate, maintain, repair, and inspect, and shall be fully responsible for the facilities that it now owns or subsequently owns unless otherwise specified in the Attachments to this Agreement. Each Party shall be responsible for the safe installation, maintenance, repair and condition of their respective lines and appurtenances on their respective sides of the point of common coupling. The Area EPS Operator and the Interconnection Customer, as appropriate, shall provide Interconnection Facilities that adequately protect the Area EPS Operator's Distribution System, personnel, and other persons from damage and injury. The allocation of responsibility for the design, installation, operation, maintenance and ownership of Interconnection Facilities shall be delineated in the Attachments to this Agreement.

1.7.6. The Area EPS Operator shall coordinate with all Affected Systems to support the interconnection.

1.8. Parallel Operation Obligations

Once the Distributed Energy Resource has been authorized to commence parallel operation, the Interconnection Customer shall abide by all rules and procedures pertaining to the parallel operation of the Distributed Energy Resource in the applicable control area, including, but not limited to; 1) the rules and procedures concerning the operation of generation set forth in the Tariff or by the applicable system operator(s) for the Area EPS Operator's Distribution System provided or referenced in an attachment to this Agreement and; 2) the Operating Requirements

set forth in Attachment 5 of this Agreement. The Minnesota Technical Requirements for interconnection are covered in a separate document, a copy of which has been made available to the Interconnection Customer and incorporated and made part of this Agreement by this reference.

1.9. Metering

As described in MN DIP 5.4, the Interconnection Customer shall be responsible for the Area EPS Operator's reasonable and necessary cost for the purchase, installation, operation, maintenance, testing, repair, and replacement of metering and data acquisition equipment specified in Attachments 2 and 3 of this Agreement. The Interconnection Customer's metering (and data acquisition, as required) equipment shall conform to applicable industry rules and Operating Requirements.

1.10. Distributed Energy Resource Capabilities and Grid Reliability

1.10.1. The Minnesota Technical Requirements outlines the Parties responsibilities consistent with IEEE 1547 Standard for Interconnection and Interoperability of Distributed Energy Resources with Associated Electric Power Systems Interfaces which provides requirements relevant to the interconnection and interoperability performance, operation and testing, and, to safety, maintenance and security considerations.

1.10.2. The Area EPS Operator may offer the Interconnection Customer the option to utilize required DER capabilities to mitigate Interconnection Customer costs related to Upgrades or Interconnection Facilities to address anticipated system impacts from the engineering review (i.e. Initial Review, Supplemental Review, or Study Process described in the MN DIP.)

2. Article 2. Inspection, Testing, Authorization, and Right of Access

2.1. Equipment Testing and Inspection

As described in MN DIP Section 5.7, the Interconnection Customer shall test and inspect its Distributed Energy Resource and Interconnection Facilities prior to interconnection pursuant to Minnesota Technical Requirements and this Agreement.

2.2. Authorization Required Prior to Parallel Operation

As described in MN DIP Section 5.8, the Area EPS Operator shall use Reasonable Efforts to list applicable parallel operation requirements by attaching the Minnesota Technical Requirements and/or including them in Attachment 5 to this Agreement. Additionally, the Area EPS Operator shall notify the Interconnection Customer of any

changes to these requirements as soon as they are known. Pursuant to the MN DIP 5.8.2, the Interconnection Customer shall not operate its Distributed Energy Resource in parallel with the Area EPS Operator's Distribution System without prior written authorization of the Area EPS Operator.

2.3. Right of Access

2.3.1. Upon reasonable notice, the Area EPS Operator may send a qualified person to the premises of the Interconnection Customer at or immediately before the time the Distributed Energy Resource first produces energy to inspect the interconnection, and observe the commissioning of the Distributed Energy Resource (including any required testing), startup, and operation for a period of up to three Business Days after initial start-up of the unit. In addition, the Interconnection Customer shall notify the Area EPS Operator at least five Business Days prior to conducting any on-site verification testing of the Distributed Energy Resource.

2.3.2. Following the initial inspection process described above, at reasonable hours, and upon reasonable notice, or at any time without notice in the event of an emergency or hazardous condition, the Area EPS Operator shall have access to the Interconnection Customer's premises for any reasonable purpose in connection with the performance of the obligations imposed on it by this Agreement or if necessary to meet its legal obligation to provide service to its customers.

2.3.3. Each Party shall be responsible for its costs associated with following this article as outlined in MN DIP Section 5.7.2 and the Minnesota Technical Requirements.

3. Article 3. Effective Date, Term, Termination, and Disconnection

3.1. Effective Date

This Agreement shall become effective upon execution by the Parties.

3.2. Term of Agreement

This Agreement shall become effective on the Effective Date and shall remain in effect from the Effective Date unless terminated earlier in accordance with article 3.3 of this Agreement.

3.3. Termination

No termination shall become effective until the Parties have complied with all Applicable Laws and Regulations applicable to such termination.

3.3.1. The Interconnection Customer may terminate this Agreement at any time by giving the Area EPS Operator 20 Business Days written notice.

3.3.2. Either Party may terminate this Agreement after Default pursuant to article 7.7.

3.3.3. Upon termination of this Agreement, the Distributed Energy Resource will be disconnected from the Area EPS Operator's Distribution System. All costs required to effectuate such disconnection shall be borne by the terminating Party, unless such termination resulted from the non-terminating Party's Default of this MN DIA or such non-terminating Party otherwise is responsible for these costs under this MN DIA.

3.3.4. The termination of this Agreement shall not relieve either Party of its liabilities and obligations, owed or continuing at the time of the termination.

3.3.5. The provisions of this article shall survive termination or expiration of this Agreement.

3.4. Temporary Disconnection

Temporary disconnection shall continue only for so long as reasonably necessary under Good Utility Practice.

3.4.1. Emergency Conditions

Under Emergency Conditions, the Area EPS Operator may immediately suspend interconnection service and temporarily disconnect the Distributed Energy Resource. The Area EPS Operator shall use Reasonable Efforts to notify the Interconnection Customer promptly when it becomes aware of an Emergency Condition that may reasonably be expected to affect the Interconnection Customer's operation of the Distributed Energy Resource. The Interconnection Customer shall use Reasonable Efforts to notify the Area EPS Operator promptly when it becomes aware of an Emergency Condition that may reasonably be expected to affect the Area EPS Operator's Distribution System or any Affected Systems. To the extent information is known, the notification shall describe the Emergency Condition, the extent of the damage or deficiency, the expected effect on the operation of both Parties' facilities and operations, its anticipated duration, and the necessary corrective action.

3.4.2. Routine Maintenance, Construction, and Repair

The Area EPS Operator may interrupt interconnection service or curtail the output of the Distributed Energy Resource and temporarily disconnect the Distributed Energy Resource from the Area EPS Operator's Distribution System when necessary for routine maintenance, construction, or repairs on the Area EPS

Operator's Distribution System. The Area EPS Operator shall use Reasonable Efforts to provide the Interconnection Customer with three Business Days notice prior to such interruption. The Area EPS Operator shall use Reasonable Efforts to coordinate such reduction or temporary disconnection with the Interconnection Customer.

3.4.3. Forced Outage

During any forced outage, the Area EPS Operator may suspend interconnection service to effect immediate repairs on the Area EPS Operator's Distribution System. The Area EPS Operator shall use Reasonable Efforts to provide the Interconnection Customer with prior notice. If prior notice is not given, the Area EPS Operator shall, upon request, provide the Interconnection Customer written documentation after the fact explaining the circumstances of the disconnection.

3.4.4. Adverse Operating Effects

The Area EPS Operator shall notify the Interconnection Customer as soon as practicable if, based on Good Utility Practice, operation of the Distributed Energy Resource may cause disruption or deterioration of service to other customers served from the same electric system, or if operating the Distributed Energy Resource could cause damage to the Area EPS Operator's Distribution System or Affected Systems. Supporting documentation used to reach the decision to disconnect shall be provided to the Interconnection Customer upon request. If, after notice, the Interconnection Customer fails to remedy the adverse operating effect within a reasonable time, the Area EPS Operator may disconnect the Distributed Energy Resource. The Area EPS Operator shall provide the Interconnection Customer with five Business Day notice of such disconnection, unless the provisions of article 3.4.1 apply.

3.4.5. Modification of the Distributed Energy Resource

The Interconnection Customer must receive written authorization from the Area EPS Operator before making any change to the Distributed Energy Resource that may have a material impact on the safety or reliability of the Distribution System. Such authorization shall not be unreasonably withheld if the modification is not a Material Modification. Material Modifications, including an increase nameplate rating or capacity, may require the Interconnection Customer to submit a new Interconnection Application as described in MN DIP Section 1.6.2. If the Interconnection Customer makes such modification without the Area EPS Operator's prior written authorization, the latter shall have the right to temporarily disconnect the Distributed Energy Resource.

3.4.6. Reconnection

The Parties shall cooperate with each other to restore the Distributed Energy Resource, Interconnection Facilities, and the Area EPS Operator's Distribution System to their normal operating state as soon as reasonably practicable following a temporary disconnection.

3.4.7 Treatment Similar to Other Retail Customers

If the Interconnection Customer receives retail electrical service at the same site as the Distributed Energy Resource, it may also be disconnected consistent with the rules and practices for disconnecting other retail electrical customers.

3.4.8 Disconnection for Default

If the Interconnection Customer is in Default it may be disconnected after a 60 day written notice is provided and the Default is not cured during this 60 day notice. This provision does not apply to disconnection based on Emergency Conditions.

4. Article 4. Cost Responsibility for Interconnection Facilities and Distribution Upgrades

4.1. Interconnection Facilities

4.1.1. The Interconnection Customer shall pay for the cost of the Interconnection Facilities itemized in Attachment 2 of this Agreement. The Area EPS Operator shall provide a good faith estimate cost, including overheads, for the purchase and construction of its Interconnection Facilities and provide a detailed itemization of such costs. Costs associated with Interconnection Facilities may be shared with other entities that may benefit from such facilities by agreement of the Interconnection Customer, such other entities, and the Area EPS Operator.

4.1.2. The Interconnection Customer shall be responsible for its share of all reasonable expenses, including overheads, associated with (1) owning, operating, maintaining, repairing, and replacing its own Interconnection Facilities, and (2) operating, maintaining, repairing, and replacing the Area EPS Operator's Interconnection Facilities.

4.2. Distribution Upgrades

The Area EPS Operator shall design, procure, construct, install, and own the Distribution Upgrades described in Attachment 6 of this Agreement. The Area EPS Operator shall provide a good faith estimate cost, including overheads, for the purchase and construction of the Distribution Upgrades and provide a detailed itemization of such costs. If the Area EPS Operator and the Interconnection Customer agree, the Interconnection Customer may construct Distribution Upgrades that are located on land

owned by the Interconnection Customer. The actual cost of the Distribution Upgrades, including overheads, shall be directly assigned to the Interconnection Customer.

5. Article 5. Cost Responsibility for Network Upgrades

5.1. Applicability

No portion of this Article 5 shall apply unless the interconnection of the Distributed Energy Resource requires Network Upgrades.

5.2. Network Upgrades

The Area EPS Operator or the Transmission Owner shall design, procure, construct, install, and own the Network Upgrades described in Attachment 6 of this Agreement. The Area EPS Operator shall provide a good faith estimate cost, including overheads, for the purchase and construction of the Network Upgrades and provide a detailed itemization of such costs. If the Area EPS Operator and the Interconnection Customer agree, the Interconnection Customer may construct Network Upgrades that are located on land owned by the Interconnection Customer. Unless the Area EPS Operator elects to pay for Network Upgrades, the actual cost of the Network Upgrades, including overheads, shall be borne initially by the Interconnection Customer.

5.2.1. Repayment of Amounts Advanced for Network Upgrades

The Interconnection Customer shall be entitled to a cash repayment, equal to the total amount paid to the Area EPS Operator and Affected System operator, if any, for Network Upgrades, including any tax gross-up or other tax-related payments associated with the Network Upgrades, and not otherwise refunded to the Interconnection Customer, to be paid to the Interconnection Customer on a dollar-for-dollar basis for the non-usage sensitive portion of transmission charges, as payments are made under the Area EPS Operator's Tariff and Affected System's Tariff for transmission services with respect to the Distributed Energy Resource. Any repayment shall include interest calculated in accordance with the methodology set forth in FERC's regulations at 18 C.F.R. § 35.19a(a)(2)(iii) from the date of any payment for Network Upgrades through the date on which the Interconnection Customer receives a repayment of such payment pursuant to this subparagraph. The Interconnection Customer may assign such repayment rights to any person.

5.2.1.1. Notwithstanding the foregoing, the Interconnection Customer, the Area EPS Operator, and any applicable Affected System operators may adopt any alternative payment schedule that is mutually agreeable so long as the Area EPS Operator and said Affected System operators take one of the following actions no later than five years from the Commercial Operation Date: (1) return to the Interconnection Customer any amounts advanced

for Network Upgrades not previously repaid, or (2) declare in writing that the Area EPS Operator or any applicable Affected System operators will continue to provide payments to the Interconnection Customer on a dollar-for-dollar basis for the non-usage sensitive portion of transmission charges, or develop an alternative schedule that is mutually agreeable and provides for the return of all amounts advanced for Network Upgrades not previously repaid; however, full reimbursement shall not extend beyond 20 years from the commercial operation date.

5.2.1.2. If the Distributed Energy Resource fails to achieve commercial operation, but it or another Distributed Energy Resource is later constructed and requires use of the Network Upgrades within five (5) years of being constructed, the Area EPS Operator and Affected System operator (after receiving payment in the amount of the cost to build these Network Upgrades from the other Distributed Energy Resource who is expected to use the Network Upgrades) shall at that time reimburse the Interconnection Customer for the amounts advanced for the Network Upgrades. Before any such reimbursement can occur, the Interconnection Customer, or the entity that ultimately constructs the Distributed Energy Resource, if different, is responsible for identifying the entity to which reimbursement must be made.

5.3. Special Provisions for Affected Systems

Unless the Area EPS Operator provides, under this Agreement, for the repayment of amounts advanced to any applicable Affected System operators for Network Upgrades, the Interconnection Customer and Affected System operator shall enter into an agreement that provides for such repayment. The agreement shall specify the terms governing payments to be made by the Interconnection Customer to Affected System operator as well as the repayment by Affected System operator.

5.4. Rights Under Other Agreements

Notwithstanding any other provision of this Agreement, nothing herein shall be construed as relinquishing or foreclosing any rights, including but not limited to firm transmission rights, capacity rights, transmission congestion rights, or transmission credits, that the Interconnection Customer shall be entitled to, now or in the future, under any other agreement or tariff as a result of, or otherwise associated with, the transmission capacity, if any, created by the Network Upgrades, including the right to obtain cash reimbursements or transmission credits for transmission service that is not associated with the Distributed Energy Resource.

6. Article 6. Billing, Payment, Milestones, and Financial Security

6.1. Billing and Payment Procedures and Final Accounting

6.1.1. The Area EPS Operator shall bill the Interconnection Customer for the design, engineering, construction, and procurement costs of Interconnection Facilities and Upgrades contemplated by this Agreement, and the Interconnection Customer shall pay each bill, pursuant to the MN DIP 5.6.5, or as otherwise agreed to by the Parties.

6.1.2. Within 80 Business Days (approximately 4 calendar months) of completing the construction and installation of the Area EPS Operator's Interconnection Facilities and/or Upgrades described in the Attachments to this Agreement, the Area EPS Operator shall provide the Interconnection Customer with a final accounting report, as described in the MN DIP 5.6.6.

6.2. Milestones

Pursuant to the MN DIP 4.4.5, 5.6.2 and 5.6.3, the Parties shall agree on milestones for which each Party is responsible and list them in Attachment 4 of this Agreement.

6.3. Financial Security Arrangements

Pursuant to the MN DIP 5.6.4, the Interconnection Customer shall provide the Area EPS Operator, at the Interconnection Customer's option, a guarantee, letter of credit or other form of security that is reasonably acceptable to the Area EPS Operator and is consistent with the Minnesota Uniform Commercial Code. Such security for payment shall be in an amount sufficient to cover the costs for constructing, designing, procuring, and installing the applicable portion of the Area EPS Operator's Interconnection Facilities and Upgrades and shall be reduced on a dollar-for-dollar basis for payments made to the Area EPS Operator under this Agreement during its term. In addition:

6.3.1. The guarantee must be made by an entity that meets the creditworthiness requirements of the Area EPS Operator, and contain terms and conditions that guarantee payment of any amount that may be due from the Interconnection Customer, up to an agreed-to maximum amount.

6.3.2. The letter of credit must be issued by a financial institution or insurer reasonably acceptable to the Area EPS Operator and must specify a reasonable expiration date not sooner than sixty (60) Business Days (three calendar months) after the due date for the issuance of the final bill.

7. Article 7. Assignment, Liability, Non-Warranty, Indemnity, Force Majeure, Consequential Damages, and Default

7.1. Assignment

This Agreement may be assigned by either Party upon 15 Business Days prior written notice and opportunity to object by the other Party; provided that:

7.1.1. Either Party may assign this Agreement without the consent of the other Party to any affiliate of the assigning Party with an equal or greater credit rating and with the legal authority and operational ability to satisfy the obligations of the assigning Party under this Agreement, provided that the Interconnection Customer promptly notifies the Area EPS Operator of any such assignment;

7.1.2. The Interconnection Customer shall have the right to assign this Agreement, without the consent of the Area EPS Operator, for collateral security purposes to aid in providing financing for the Distributed Energy Resource, provided that the Interconnection Customer will promptly notify the Area EPS Operator of any such assignment.

7.1.3. Any attempted assignment that violates this article is void and ineffective. Assignment shall not relieve a Party of its obligations, nor shall a Party's obligations be enlarged, in whole or in part, by reason thereof. An assignee is responsible for meeting the same financial, credit, and insurance obligations as the Interconnection Customer. Where required, consent to assignment will not be unreasonably withheld, conditioned or delayed.

7.2. Limitation of Liability

Each Party's liability to the other Party for any loss, cost, claim, injury, liability, or expense, including reasonable attorney's fees, relating to or arising from any act or omission in its performance of this Agreement, shall be limited to the amount of direct damage actually incurred. In no event shall either Party be liable to the other Party for any indirect, special, consequential, or punitive damages, except as authorized by this Agreement.

7.3. Non-Warranty

The Area EPS Operator does not give any warranty, expressed or implied, as to the adequacy, safety, or other characteristics of any structures, equipment, wires, appliances or devices owned, installed or maintained by the Interconnection Customer, including without limitation the Distributed Energy Resource and any structures, equipment, wires, appliances or devices not owned, operated or maintained by the Area EPS Operator.

7.4. Indemnity

7.4.1. This provision protects each Party from liability incurred to third parties as a result of carrying out the provisions of this Agreement. Liability under this provision is exempt from the general limitations on liability found in article 7.2.

7.4.2. The Parties shall at all times indemnify, defend, and hold the other Party harmless from, any and all damages, losses, claims, including claims and actions relating to injury to or death of any person or damage to property, demand, suits, recoveries, costs and expenses, court costs, attorney fees, and all other obligations by or to third parties, arising out of or resulting from the other Party's action or failure to meet its obligations under this Agreement on behalf of the indemnifying Party, except in cases of gross negligence or intentional wrongdoing by the indemnified Party.

7.4.3. This is indemnification obligation shall apply notwithstanding any negligent or intentional acts, errors or omissions of the Indemnified Party, but the Indemnifying Party's liability to indemnify the Indemnified Party shall be reduced in proportion to the percentage by which the Indemnified Party's negligent or intentional acts, errors or omissions caused the damage.

7.4.4. Neither Party shall be indemnified for its damages resulting from its sole negligence, intentional acts or willful misconduct. These indemnity provisions shall not be construed to relieve any insurer of its obligation to pay claims consistent with the provisions of a valid insurance policy.

7.4.5. If an indemnified person is entitled to indemnification under this article as a result of a claim by a third party, and the indemnifying Party fails, after notice and reasonable opportunity to proceed under this article, to assume the defense of such claim, such indemnified person may at the expense of the indemnifying Party contest, settle or consent to the entry of any judgment with respect to, or pay in full, such claim.

7.4.6. If an indemnifying party is obligated to indemnify and hold any indemnified person harmless under this article, the amount owing to the indemnified person shall be the amount of such indemnified person's actual loss, net of any insurance or other recovery.

7.4.7. Promptly after receipt by an indemnified person of any claim or notice of the commencement of any action or administrative or legal proceeding or investigation as to which the indemnity provided for in this article may apply, the indemnified person shall notify the indemnifying party of such fact. Any failure of or delay in such notification shall not affect a Party's indemnification

obligation unless such failure or delay is materially prejudicial to the indemnifying party.

7.5. Consequential Damages

Other than as expressly provided for in this Agreement, neither Party shall be liable under any provision of this Agreement for any losses, damages, costs or expenses for any special, indirect, incidental, consequential, or punitive damages, including but not limited to loss of profit or revenue, loss of the use of equipment, cost of capital, cost of temporary equipment or services, whether based in whole or in part in contract, in tort, including negligence, strict liability, or any other theory of liability; provided, however, that damages for which a Party may be liable to the other Party under another agreement will not be considered to be special, indirect, incidental, or consequential damages hereunder.

7.6. Force Majeure

If a Force Majeure Event prevents a Party from fulfilling any obligations under this Agreement, the Party affected by the Force Majeure Event (Affected Party) shall promptly notify the other Party, either in writing or via the telephone, of the existence of the Force Majeure Event. The notification must specify in reasonable detail the circumstances of the Force Majeure Event, its expected duration, and the steps that the Affected Party is taking to mitigate the effects of the event on its performance. The Affected Party shall keep the other Party informed on a continuing basis of developments relating to the Force Majeure Event until the event ends. The Affected Party will be entitled to suspend or modify its performance of obligations under this Agreement (other than the obligation to make payments) only to the extent that the effect of the Force Majeure Event cannot be mitigated by the use of Reasonable Efforts. The Affected Party will use Reasonable Efforts to resume its performance as soon as possible.

7.7. Default

7.7.1. No Default shall exist where such failure to discharge an obligation (other than the payment of money) is the result of a Force Majeure Event as defined in this Agreement or the result of an act or omission of the other Party. Upon a Default, the non-defaulting Party shall give written notice of such Default to the defaulting Party. Except as provided in article 7.6.2, the defaulting Party shall have 60 calendar days from receipt of the Default notice within which to cure such Default; provided however, if such Default is not capable of cure within 60 calendar days, the defaulting Party shall commence such cure within 20 calendar days after notice and continuously and diligently complete such cure within six months from receipt of the Default notice; and, if cured within such time, the Default specified in such notice shall cease to exist.

7.7.2. If a Default is not cured as provided in this article, or if a Default is not capable of being cured within the period provided for herein, the non-defaulting Party shall have the right to terminate this Agreement by written notice at any time until cure occurs, and be relieved of any further obligation hereunder and, whether or not that Party terminates this Agreement, to recover from the defaulting Party all amounts due hereunder, plus all other damages and remedies to which it is entitled at law or in equity. The provisions of this article will survive termination of this Agreement.

8. Article 8. Insurance

8.1. An Area EPS Operator may only require an Interconnection Customer to purchase insurance covering damages pursuant to the MN DIP 5.10.

8.2. The Area EPS Operator agrees to maintain general liability insurance or self-insurance consistent with the Area EPS Operator's commercial practice. Such insurance or self-insurance shall not exclude coverage for the Area EPS Operator's liabilities undertaken pursuant to this Agreement.

8.3. The Parties further agree to notify each other whenever an accident or incident occurs resulting in any injuries or damages that are included within the scope of coverage of such insurance, whether or not such coverage is sought.

8.4. Failure of the Interconnection Customer or Area EPS Operator to enforce the minimum levels of insurance does not relieve the Interconnection Customer from maintaining such levels of insurance or relieve the Interconnection Customer of any liability.

9. Article 9. Confidentiality

9.1. Confidential Information shall mean any confidential and/or proprietary information provided by one Party to the other Party that is clearly marked or otherwise designated "Confidential." For purposes of this Agreement, design, operating specifications, and metering data provided by the Interconnection Customer may be deemed Confidential Information regardless of whether it is clearly marked or otherwise designated as such. If requested by either Party, the other Party shall provide in writing the basis for asserting that the information warrants confidential treatment. Parties providing a Governmental Authority trade secret, privileged or otherwise not public or nonpublic data under the Minnesota Government Data Practices Act, Minnesota Statutes Chapter 13, shall

identify such data consistent with the Commission's September 1, 1999 Revised Procedures for Handling Trade Secret and Privileged Data, available online at: https://mn.gov/puc/puc-documents/#4

9.2. Confidential Information does not include information previously in the public domain with proper authorization, required to be publicly submitted or divulged by Governmental Authorities (after notice to the other Party and after exhausting any opportunity to oppose such publication or release), or necessary to be publicly divulged in an action to enforce this Agreement. Each Party receiving Confidential Information shall hold such information in confidence and shall not disclose it to any third party nor to the public without the prior written authorization from the Party providing that information, except to fulfill obligations under this Agreement, or to fulfill legal or regulatory requirements that could not otherwise be fulfilled by not making the information public.

9.2.1. Each Party shall hold in confidence and shall not disclose Confidential Information, to any person (except employees, officers, representatives and agents, who agree to be bound by this section). Confidential Information shall be clearly marked as such on each page or otherwise affirmatively identified. If a court, government agency or entity with the right, power, and authority to do so, requests or requires either Party, by subpoena, oral disposition, interrogatories, requests for production of documents, administrative order, or otherwise, to disclose Confidential Information, that Party shall provide the other Party with prompt notice of such request(s) or requirements(s) so that the other Party may seek an appropriate protective order or waive compliance with the terms of this Agreement. In the absence of a protective order or waiver the Party shall disclose such confidential information which, in the opinion of its counsel, the party is legally compelled to disclose. Each Party will use reasonable efforts to obtain reliable assurance that confidential treatment will be accorded any confidential information so furnished.

9.2.2. Critical infrastructure information or information that is deemed or otherwise designated by a Party as Critical Energy/Electric Infrastructure Information (CEII) pursuant to FERC regulation, 18 C.F.R. §388.133, as may be amended from time to time, may be subject to further protections for disclosure as required by FERC or FERC regulations or orders and the disclosing Party's CEII policies.

9.2.3. Each Party shall employ at least the same standard of care to protect Confidential Information obtained from the other Party as it employs to protect its own Confidential Information.

9.2.4. Each Party is entitled to equitable relief, by injunction or otherwise, to enforce its rights under this provision to prevent the release of Confidential Information without bond or proof of damages, and may seek other remedies available at law or in equity for breach of this provision.

10. Article 10. Disputes

10.1. The Parties agree to attempt to resolve all disputes arising out of the interconnection process and associated study and interconnection agreements according to the provisions of this article and Minnesota Administrative Rules 7829.1500-7829.1900. More information on the Commission's Consumer Affairs Office dispute resolution services is available on the Commission's website: https://mn.gov/puc/consumers/help/complaint/

10.2. Prior to a written Notice of Dispute, the Party shall contact the other Party and raise the issue and the relief sought in an attempt to resolve the issue immediately.

10.3. In the event of a dispute, the disputing Party shall provide the other Party a written Notice of Dispute containing the relevant known facts pertaining to the dispute, the specific dispute and the relief sought, and express notice by the disputing Party that it is invoking the procedures under this article. The Interconnection Customer may utilize the Commission's Consumer Affairs Office's complaint/inquiry form and Informal Complaint dispute resolution process to assist with the written Notice of Dispute. The notice shall be sent to the non-disputing Party's email address and physical address set forth in the interconnection agreement or Interconnection Application, if there is no interconnection agreement. If the Interconnection Customer chooses not to utilize the Commission's Consumer Affair Office dispute resolution process, the Interconnection Customer shall provide an informational electronic copy of the Notice of Dispute to the Consumer Affairs Office at the Commission at consumer.puc@state.mn.us.

10.4. The non-disputing Party shall acknowledge the notice within three (3) Business Days of its receipt and identify a representative with the authority to make decisions for the non-disputing Party with respect to the dispute.

10.5. The non-disputing Party shall provide the disputing Party with relevant regulatory and/or technical details and analysis regarding the Area EPS Operator interconnection requirements under dispute within ten (10) Business Days of the date of the Notice of Dispute. Within twenty (20) Business Days of the date of the Notice of Dispute, the Parties' authorized representatives will be required to meet and confer to try to resolve the dispute. Parties shall operate in good faith and use best efforts to resolve the dispute.

10.6. If a resolution is not reached in the thirty (30) Business Days from the date of the notice described in section 10.3, the Parties may 1) if mutually agreed, continue negotiations for up to an additional twenty (20) Business Days; or 2) either Party may request the Commission's Consumer Affairs Office provide mediation in an attempt to resolve the dispute within twenty (20) Business Days with the opportunity to extend this timeline upon mutual agreement. Alternatively, both Parties by mutual agreement may request mediation from an outside third-party mediator with costs to be shared equally between the Parties.

10.7. If the results of the mediation are not accepted by one or more Parties and there is still disagreement, the dispute shall proceed to the Commission's Formal Complaint process as described in Minn. Rules 7829.1700-1900 unless mutually agreed to continue with informal dispute resolution.

10.8. At any time, either Party may file a complaint before the Commission pursuant to Minn. Stat. §216B.164, if applicable, and Commission rules outlined in Minn. Rules Ch. 7829.

11. Article 11. Taxes

11.1. The Parties agree to follow all applicable tax laws and regulations, consistent with Internal Revenue Service and any other relevant local, state and federal requirements.

11.2. Each Party shall cooperate with the other to maintain the other Party's tax status. It is incumbent on the Party seeking to maintain its tax status to provide formal written notice to the other Party detailing what exact cooperation it is seeking from the other Party well prior to any deadline by which any such action would need to be taken. Nothing in this Agreement is intended to adversely affect, if applicable, the Area EPS Operator's tax exempt status with respect to the issuance of bonds including, but not limited to, local furnishing bonds.

12. Article 12. Miscellaneous

12.1. Governing Law, Regulatory Authority, and Rules

The validity, interpretation and enforcement of this Agreement and each of its provisions shall be governed by the Minnesota Public Utilities Commission and the laws of the state of Minnesota, without regard to its conflicts of law principles. This Agreement is subject to all Applicable Laws and Regulations. Each Party expressly reserves the right to seek changes in, appeal, or otherwise contest any laws, orders, or regulations of a Governmental Authority.

12.2. Amendment

The Parties may amend this Agreement by a written instrument duly executed by both Parties under the process described below, or under article 12.12 of this Agreement.

If the Parties seek to amend this Agreement by a written instrument duly executed by both Parties, this amendment will need to receive Commission approval prior to it being effective. The Area EPS Operator and Interconnection Customer may seek Commission approval of an amendment to the Interconnection Agreement for use between them for a specific Interconnection Application in the following ways:

12.2.1. File a Petition with the Commission, or

12.2.2. File a Notice with the Commission of the proposed amendment. The Notice should include a copy of the amendment showing in redline format how the amendment would alter the MN DIA between the Area EPS Operator and Interconnection Customer for the Interconnection Application at issue. If no objection or notice of intent to object is filed within 30 days, then the proposed amendment would be considered to be approved by the Commission. If there is a timely filed objection of notice of intent to object, then the proposed amendment would not be considered to have been approved by the Commission and could only be used if the Commission subsequently issues a written order authorizing its use.

12.2.3. Commission approval of an amendment to the Interconnection Agreement is not needed where such an amendment only addresses updating or correcting: 1) information specified in the Interconnection Application; 2) exhibits or attachments to the Interconnection Agreement as long as they are not additional agreements or requirements not covered in the MN DIP or Minnesota Technical Requirements; or 3) information provided in the blank lines to the MN DIA or Uniform Statewide Contract forms.

12.3. No Third-Party Beneficiaries

This Agreement is not intended to and does not create rights, remedies, or benefits of any character whatsoever in favor of any persons, corporations, associations, or entities other than the Parties, and the obligations herein assumed are solely for the use and benefit of the Parties, their successors in interest and where permitted, their assigns.

12.4. Waiver

12.4.1. The failure of a Party to this Agreement to insist, on any occasion, upon strict performance of any provision of this Agreement will not be considered a waiver of any obligation, right, or duty of, or imposed upon, such Party.

12.4.2. Any waiver at any time by either Party of its rights with respect to this Agreement shall not be deemed a continuing waiver or a waiver with respect to any other failure to comply with any other obligation, right, duty of this Agreement. Termination or default of this Agreement for any reason by Interconnection Customer shall not constitute a waiver of the Interconnection Customer's legal rights to obtain an interconnection from the Area EPS Operator. Any waiver of this Agreement shall, if requested, be provided in writing.

12.5. Entire Agreement

This Agreement, including all Attachments, constitutes the entire agreement between the Parties with reference to the subject matter hereof, and supersedes all prior and contemporaneous understandings or agreements, oral or written, between the Parties with respect to the subject matter of this Agreement. There are no other agreements, representations, warranties, or covenants which constitute any part of the consideration for, or any condition to, either Party's compliance with its obligations under this Agreement. This Agreement can only be amended or modified in writing signed by both Parties.

12.6. Multiple Counterparts

This Agreement may be executed in two or more counterparts, each of which is deemed an original but all constitute one and the same instrument. Electronic signatures are acceptable if the Area EPS Operator has made such a determination pursuant to MN DIP 1.2.1.1.

12.7. No Partnership

This Agreement shall not be interpreted or construed to create an association, joint venture, agency relationship, or partnership between the Parties or to impose any partnership obligation or partnership liability upon either Party. Neither Party shall have any right, power or authority to enter into any agreement or undertaking for, or act on behalf of, or to act as or be an agent or representative of, or to otherwise bind, the other Party.

12.8. Severability

If any provision or portion of this Agreement shall for any reason be held or adjudged to be invalid or illegal or unenforceable by any court of competent jurisdiction or other Governmental Authority, (1) such portion or provision shall be

deemed separate and independent, (2) the Parties shall negotiate in good faith to restore insofar as practicable the benefits to each Party that were affected by such ruling, and (3) the remainder of this Agreement shall remain in full force and effect.

12.9. Security Arrangements

Infrastructure security of electric system equipment and operations and control hardware and software is essential to ensure day-to-day reliability and operational security. All public utilities are expected to meet basic standards for system infrastructure and operational security, including physical, operational, and cyber-security practices.

12.10. Environmental Releases

Each Party shall notify the other Party, first orally and then in writing, of the release of any hazardous substances, any asbestos or lead abatement activities, or any type of remediation activities related to the Distributed Energy Resource or the Interconnection Facilities, each of which may reasonably be expected to affect the other Party. The notifying Party shall (1) provide the notice as soon as practicable, provided such Party makes a good faith effort to provide the notice no later than 24 hours after such Party becomes aware of the occurrence, and (2) promptly furnish to the other Party copies of any publicly available reports filed with any governmental authorities addressing such events.

12.11. Subcontractors

Nothing in this Agreement shall prevent a Party from utilizing the services of any subcontractor as it deems appropriate to perform its obligations under this Agreement; provided, however, that each Party shall require its subcontractors to comply with all applicable terms and conditions of this Agreement in providing such services and each Party shall remain primarily liable to the other Party for the performance of such subcontractor.

12.11.1. The creation of any subcontract relationship shall not relieve the hiring Party of any of its obligations under this Agreement. The hiring Party shall be fully responsible to the other Party for the acts or omissions of any subcontractor the hiring Party hires as if no subcontract had been made; provided, however, that in no event shall the Area EPS Operator be liable for the actions or inactions of the Interconnection Customer or its subcontractors with respect to obligations of the Interconnection Customer under this Agreement. Any applicable obligation imposed by this Agreement upon the hiring Party shall be equally binding upon, and shall be construed as having application to, any subcontractor of such Party.

12.11.2. The obligations under this article will not be limited in any way by any limitation of subcontractor's insurance.

12.12. Inclusion of Area EPS Operator Tariffs and Rules

The interconnection services provided under this Agreement shall at all times be subject to the terms and conditions set forth in the tariff schedules and rules applicable to the electric service provided by the Area EPS Operator, which tariff schedules and rules are hereby incorporated into this Agreement by this reference. Notwithstanding any other provisions of this Agreement, the Area EPS Operator shall have the right to unilaterally file with the Minnesota Public Utilities Commission pursuant to the Commission's rules and regulations, an application for change in rates, charges, classification, service, tariff, or rule or any agreement relating thereto. The Interconnection Customer shall also have the right to unilaterally file with the Commission, pursuant to the Commission's rules and regulations, an application for change in rates, charges, classification, service, tariff, or rule or any agreement relating thereto. Each Party shall be have the right to protest any such filing by the other Party and/or to participate fully in any proceeding before the Commission in which such modifications may be considered, pursuant to the Commission's rules and regulations.

13. Article 13. Notices

13.1. General

Unless otherwise provided in this Agreement, any written notice, demand, or request required or authorized in connection with this Agreement ("Notice") shall be deemed properly given if delivered in person, delivered by recognized national currier service, or sent by first class mail, postage prepaid, to the person specified below:

If to the Interconnection Customer:

Interconnection Customer:

_____

Attention: _____

Address:

_____

City: _____ State:_____
Zip:_____

Phone: _____ Email: _____

If to the Area EPS Operator:

Area EPS Operator: _____

Attention: _____

Address:

_____

City: _____ State:_____
Zip:_____

Phone: _____ Email: _____

13.2. Billing and Payment

Billings and payments shall be sent to the addresses set out below:

Interconnection Customer:

_____

Attention: _____

Address:

_____

City: _____ State:_____
Zip:_____

Area EPS Operator: _____

Attention: _____

Address:

_____

City: _____ State:_____
Zip:_____

13.3. Alternative Forms of Notice

Any notice or request required or permitted to be given by either Party to the other and not required by this Agreement to be given in writing may be so given by telephone or e mail to the telephone numbers and e-mail addresses set out below:

If to the Interconnection Customer:

Interconnection Customer:

_____

Attention: _____

Address:

_____

City: _____ State:_____
Zip:_____

Phone: _____ Email: _____

If to the Area EPS Operator:

Area EPS Operator: _____

Attention: _____

Address:

_____

City: _____ State:_____
Zip:_____

Phone: _____ Email: _____

13.4. Designated Operating Representative

The Parties may also designate operating representatives to conduct the communications which may be necessary or convenient for the administration of this Agreement. This person will also serve as the point of contact with respect to operations and maintenance of the Party's facilities.

Interconnection Customer's Operating Representative:

Interconnection Customer:

_____

Attention: _____

Address:

_____

City: _____ State:_____
Zip:_____

Phone: _____ Email: _____

Area EPS Operator's Operating Representative:

Area EPS Operator: _____

Attention: _____

Address:

_____

City: _____ State:_____
Zip:_____

Phone: _____ Email: _____

13.5. Changes to the Notice Information

Either Party may change this information by giving five Business Days written notice to the other Party prior to the effective date of the change.

14. Article 14. Signatures

IN WITNESS WHEREOF, the Parties have caused this Agreement to be executed by their respective duly authorized representatives.

For the Area EPS Operator

Name: _____

Title: _____

Date: _____

For the Interconnection Customer

Name: _____

Title: _____

Date: _____

Attachment 1: Glossary of Terms

Affected System – Another Area EPS Operator's system, or Transmission Owner's Transmission System, or Transmission System connected generation which may be affected by the proposed interconnection.

Applicant Agent – A person designated in writing by the Interconnection Customer to represent or provide information to the Area EPS on the Interconnection Customer's behalf throughout the interconnection process.

Area EPS - The electric power distribution system connected at the Point of Common Coupling

Area EPS Operator – An entity that owns, controls, or operates the electric power distribution systems that are used for the provision of electric service in Minnesota.

Business Day – Monday through Friday, excluding Holidays as defined by Minn. Stat. §645.44, Subd. 5. See MN DIP 5.2.1 for more on computation of time.

Certified Equipment - UL 1741 listing is a common form of DER inverter certification. See MN DIP Attachment 4: Certification Codes and Standards and Attachment 5: Certification of Distributed Energy Resource Equipment.

Confidential Information – See MN DIA Article 9.

Distributed Energy Resource (DER) – A source of electric power that is not directly connected to a bulk power system. DER includes both generators and energy storage technologies capable of exporting active power to an EPS. An interconnection system or a supplemental DER device that is necessary for compliance with this standard is part of a DER.For the purpose of the MN DIP and MN DIA, the DER includes the Customer's Interconnection Facilities but shall not include the Area EPS Operator's Interconnection Facilities

Distribution System – The Area EPS facilities which are not part of the Local EPS, Transmission System or any generation system.

Distribution Upgrades – The additions, modifications, and upgrades to the Distribution System at or beyond the Point of Common Coupling to facilitate interconnection of the DER and render the distribution service necessary to effect the Interconnection Customer's connection to the Distribution System. Distribution Upgrades do not include Interconnection Facilities.

Effective Date – Agreement(s) shall become effective upon execution by the Parties.

Electric Power System (EPS) – The facilities that deliver electric power to a load.

Emergency Conditions - a condition or situation: (1) that in the judgment of the Party making the claim is imminently likely to endanger life or property; or (2) that, in the case of the Area EPS Operator, is imminently likely (as determined in a non-discriminatory manner) to cause a material adverse effect on the security of, or damage to the Distribution System, the Area EPS Operator's Interconnection Facilities or the Distribution Systems of others to which the Distribution System is directly connected; or (3) that, in the case of the Interconnection Customer, is imminently likely (as determined in a non-discriminatory manner) to cause a material adverse effect on the security of, or damage to, the Distributed Energy Resource or the Interconnection Customer's Interconnection Facilities.

Fast Track Process – The procedure as described in MN DIP Section 3 for evaluating an Interconnection Application for a Distributed Energy Resource that meets the eligibility requirements of MN DIP section 3.1

Force Majeure Event – An act of God, labor disturbance, act of the public enemy, war, insurrection, riot, fire, storm or flood, explosion, breakage or accident to machinery or equipment, an order, regulation or restriction imposed by governmental, military or lawfully established civilian authorities, or an other cause beyond a Party's control. A Force Majeure Event does not include an act of negligence or intentional wrongdoing.

Good Utility Practice – Any of the practices, methods and acts engaged in or approved by a significant portion of the electric industry during the relevant time period, or any of the practices, methods and act which, in the exercise of reasonable judgment in light of the facts known at the time the decision was made, could have been expected to accomplish the desired result at a reasonable cost consistent with good business practices, reliability, safety and expedition. Good Utility Practice is not intended to be limited to the optimum practice, method, or act to the exclusion of all others, but rather to be acceptable practices, methods, or acts generally accepted in the region.

Governmental Authority – Any federal, state, local or other governmental regulatory or administrative agency, court, commission, department, board, or other governmental subdivision, legislature, rulemaking board, tribunal, or other governmental authority having jurisdiction over the Parties, their respective facilities, or the respective services they provide, and exercising or entitled to exercise any administrative, executive, police, or taxing authority or power; provided, however, that such term does not include the Interconnection Customer, the Area EPS Operator, or any Affiliate thereof. The Minnesota Public Utilities Commission is the authority governing interconnection requirements unless otherwise provided for in the Minnesota Technical Requirements.

Interconnection Agreement – The terms and conditions between the Area EPS Operator and Interconnection Customer (Parties). See MN DIP Section 1.1.5 for when the Uniform Statewide Contract or MN DIA applies.

Interconnection Application – The Interconnection Customer's request to interconnect a new or modified, as described in MN DIP Section 1.6, Distributed Energy Resource. See MN DIP Attachment 2 Simplified Application Form and MN DIP Attachment 3 Interconnection Application Form.

Interconnection Customer – The person or entity, including the Area EPS Operator, whom will be the owner of the DER that proposes to interconnect a DER(s) with the Area EPS Operator's Distribution System. The Interconnection Customer is responsible for ensuring the Distributed Energy Resource(s) is designed, operated and maintained in compliance with the Minnesota Technical Requirements.

Interconnection Facilities – The Area EPS Operator's Interconnection Facilities and the Interconnection Customer's Interconnection Facilities. Collectively, Interconnection Facilities include all facilities and equipment between the Distributed Energy Resource and Customer Interconnection System and the Point of Common Coupling, including any modification, additions or upgrades that are necessary to physically and electrically interconnect the Distributed Energy Resource to the Area EPS Operator's System. Some examples of Customer Interconnection Facilities include: supplemental DER devices, inverters, and associated wiring and cables up to the Point of DER Connection. Some examples of Area EPS Operator Interconnection Facilities include sole use facilities; such as, line extensions, controls, relays, switches, breakers, transformers and shall not include Distribution Upgrades or Network Upgrades.

Material Modification – A modification to machine data, equipment configuration or to the interconnection site of the DER at any time after receiving notification by the Area EPS Operator of a complete Interconnection Application that has a material impact on the cost, timing, or design of any Interconnection Facilities or Upgrades, or a material impact on the cost, timing or design of any Interconnection Application with a later Queue Position or the safety or reliability of the Area EPS.[1]

[1] A Material Modification shall include, but may not be limited to, a modification from the approved Interconnection Application that: (1) changes the physical location of the point of common coupling; such that it is likely to have an impact on technical review; (2) increases the nameplate rating or output characteristics of the Distributed Energy Resource; (3) changes or replaces generating equipment, such as generator(s), inverter(s), transformers, relaying, controls, etc., and substitutes equipment that is not like-kind substitution in certification, size, ratings, impedances, efficiencies or capabilities of the equipment; (4) changes transformer connection(s) or grounding; and/or (5) changes to a certified inverter with different specifications or different inverter control settings or configuration. A Material Modification shall not include a modification from the approved Interconnection Application that: (1) changes the ownership of a Distributed Energy Resource; (2) changes the address of the

MN DIA - The Minnesota Distributed Energy Resource Interconnection Agreement. See MN DIP Section 1.1.5 for when the Uniform Statewide Contract or MN DIA applies.

MN DIP – The Minnesota Distributed Energy Resource Interconnection Process outline the statewide interconnection standards.

MN Technical Requirements – The term including all of the DER technical interconnection requirement documents for the state of Minnesota; including: 1) Attachment 2 Distributed Generation Interconnection Requirements established in the Commission's September 28, 2004 Order in E-999/CI-01-1023) until superseded and upon Commission approval of updated Minnesota DER Technical Interconnection and Interoperability Requirements in E-999/CI-16-521 (anticipated February 2019.)

Nameplate Rating: nominal voltage (V), current (A), maximum active power (kWac), apparent power (kVA), and reactive power (kvar) at which a DER is capable of sustained operation. For a Local EPS with multiple DER units, the aggregate nameplate rating is equal to the sum of all DERs nameplate rating in the Local EPS, not including aggregate capacity limiting mechanisms such as coincidence factors, plant controller limits, etc. that may be applicable for specific cases. (Aggregate Nameplate Rating). The nameplate ratings referenced in the MN DIP are alternating current nameplate DER ratings See MN DIP Section 5.14 on Capacity of the Distributed Energy Resource.

Network Upgrades – Additions, modifications, and upgrades to the Transmission System required at or beyond the point at which the DER interconnects with the Area EPS Operator's System to accommodate the interconnection with the DER to the Area EPS Operator's System. Network Upgrades do not include Distribution Upgrades.

Notice of Dispute – The disputing Party shall provide the other Party this written notice containing the relevant known facts pertaining to the dispute, the specific dispute and the relief sought, and express notice by the disputing Party that it is invoking the procedures under MN DIP 5.3.

Operating Requirements – Any operating and technical requirements that may be applicable due to the Transmission Provider's technical requirements or Minnesota Technical Requirements, including those set forth in this Agreement.

Distributed Energy Resource, so long as the physical point of common coupling remains the same; (3) changes or replaces generating equipment such as generator(s), inverter(s), solar panel(s), transformers, relaying, controls, etc. and substitutes equipment that is a like-kind substitution in certification, size, ratings, impedances, efficiencies or capabilities of the equipment; and/or (4) increases the DC/AC ratio but does not increase the maximum AC output capability of the Distributed Energy Resource.

Party or Parties – The Area EPS Operator and the Interconnection Customer.

Point of Common Coupling (PCC)– The point where the Interconnection Facilities connect with the Area EPS Operator's Distribution System. See figure 1. Equivalent, in most cases, to "service point" as specified by the Area EPS Operator and described in the National Electrical Code and the National Electrical Safety Code.

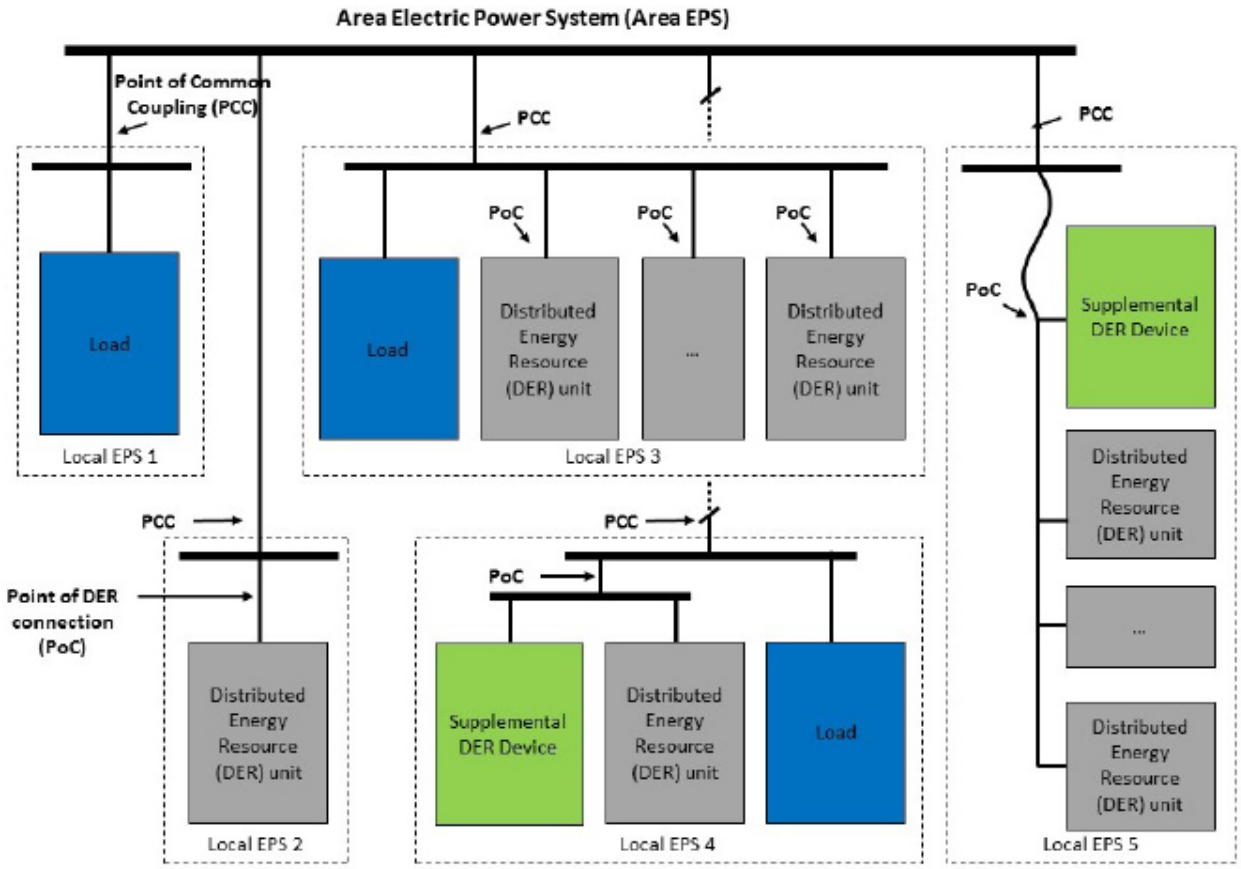

Figure 1: Point of Common Coupling and Point of DER Connection

(Source: IEEE 1547)

Point of DER Connection (PoC) – When identified as the Reference Point of Applicability, the point where an individual DER is electrically connected in a Local EPS and meets the requirements of this standard exclusive of any load present in the respective part of the Local EPS (e.g. terminals of the inverter when no supplemental DER device is required.) For DER Unit(s) that are not self-sufficient to meet the requirements without (a) supplemental DER device(s), the point of DER connection is the point where the requirements of this standard are met by DER in conjunction with (a) supplemental DER device(s) exclusive of any load present in the respective part of the Local EPS.

Queue Position – The order of a valid Interconnection Application, relative to all other pending valid Interconnection Applications, that is established based upon the date- and time- of receipt of the complete Interconnection Application as described in MN DIP sections 1.5.2 and 1.8.

Reasonable Efforts – With respect to an action required to be attempted or taken by a Party under these procedures, efforts that are timely and consistent with Good Utility Practice and are otherwise substantially equivalent to those a Party would use to protect its own interests.

Reference Point of Applicability – The location, either the Point of Common Coupling or the Point of DER Connection, where the interconnection and interoperability performance requirements specified in IEEE 1547 apply. With mutual agreement, the Area EPS Operator and Customer may determine a point between the Point of Common Coupling and Point of DER Connection. See Minnesota DER Technical Interconnection and Interoperability Requirements for more information.

Simplified Process – The procedure for evaluating an Interconnection Application for a certified inverter-based DER no larger than 20 kW that uses the screens described in MN DIP section 3.2. The Simplified process includes simplified procedures. MN DIP Attachment 2 Simplified Application Form includes a brief set of terms and conditions and the option for an Interconnection Agreement described in MN DIP 1.1.5. See MN DIP Section 2 Simplified Process.

Study Process – The procedure for evaluating an Interconnection Application that includes the MN DIP Section 4 scoping meeting, system impact study, and facilities study.

Tariff – The Area EPS Operator's Tariff filed in compliance with the Minnesota Distributed Energy Resource Interconnection Procedures (MN DIP) and approved by the Minnesota Public Utilities Commission (MPUC or Commission).

Transmission Owner – The entity that owns, leases or otherwise possesses an interest in the portion of the Transmission System relevant to the Interconnection.

Transmission Provider – The entity (or its designated agent) that owns, leases, controls, or operates transmission facilities used for the transmission of electricity. The term Transmission Provider includes the Transmission Owner when the Transmission Owner is separate from the Transmission Provider. The Transmission Provider may include the Independent System Operator or Regional Transmission Operator.

Transmission System – The facilities owned, leased, controlled or operated by the Transmission Provider or the Transmission Owner that are used to provide transmission service. See the Commission's July 26, 2000 Order Adopting Boundary Guidelines for Distinguishing Transmission from Generation and Distribution Assets in Docket No. E-999/CI-99/1261.

Uniform Statewide Contract – State of Minnesota's standard, uniform contract that must be applied to all qualifying new and existing interconnections between a utility and DER having capacity less than 40 kilowatts if interconnecting with a cooperative or municipal utility and 1,000 kilowatts if interconnecting with a public utility. (Minn. Rules 7835.9910)

Upgrades – The required additions and modifications to the Area EPS Operator's Transmission or Distribution System at or beyond the Point of Interconnection. Upgrades may be Network Upgrades or Distribution Upgrades. Upgrades do not include Interconnection Facilities.

Attachment 2: Description and Costs of the Distributed Energy Resource, Interconnection Facilities, and Metering Equipment

Equipment, including the Distributed Energy Resource, Interconnection Facilities, and metering equipment shall be itemized and identified as being owned by the Interconnection Customer or the Area EPS Operator. The Area EPS Operator will provide a good faith estimate itemized cost, including administrative overheads, of its Interconnection Facilities and metering equipment, and a good faith estimate itemized cost of the annual operation and maintenance expenses associated with its Interconnection Facilities and metering equipment. The Area EPS shall inform the Interconnection Customer of the option to either pay the metering costs upfront or through a monthly metering fee and provide the customer a copy of the tariff with the metering fee pursuant to MN DIP 5.4.

Attachment 3: One-line Diagram Depicting the Distributed Energy Resource, Interconnection Facilities, Metering Equipment, and Upgrades

Attachment 4: Milestones

The Milestone in line (1) below may be a calendar date. All other dates in this Attachment 4 may be number of Business Days from the calendar date in line (1) or from the completion of a different Milestone described in a specified line number. Similarly, the anticipated In-Service Date may be based on the number of Business Days from the completion of a specified line number.

In-Service Date: _____

Critical milestones and responsibility as agreed to by the Parties:

	Milestone/Anticipated Date	**Responsible Party**
(1)	_____	_____
(2)	_____	_____
(3)	_____	_____
(4)	_____	_____
(5)	_____	_____
(6)	_____	_____
(7)	_____	_____
(8)	_____	_____
(9)	_____	_____
(10)	_____	_____

Agreed to by:

For the Area EPS Operator_____ Date_____

For the Transmission Owner (If Applicable) _____ Date_____

For the Interconnection Customer_____ Date_____

Attachment 5: Additional Operating and Maintenance Requirements for the Area EPS Operator's Distribution System and Affected Systems Needed to Support the Interconnection Customer's Needs

The Area EPS Operator shall also provide requirements that must be met by the Interconnection Customer prior to initiating parallel operation with the Area EPS Operator's Distribution System. Additional operating and maintenance requirements for an Affected System needed to support the Interconnection Customer's needs may be addressed in a separate agreement as described in Article 5.3.

Attachment 6: Area EPS Operator's Description of Distribution and Network Upgrades and Good Faith Estimates of Upgrade Costs

The Area EPS Operator shall describe Distribution and Network Upgrades and provide an itemized good faith estimate of the costs, including administrative overheads, of the Upgrades and annual operation and maintenance expenses associated with such Upgrades. The Area EPS Operator shall functionalize Upgrade costs and annual expenses as either transmission or distribution related. Additional Distribution or Network Upgrades required for an Affected System may be addressed in a separate agreement as described in Article 5.3.

Attachment 7: Assignment of Minnesota Distributed Energy Resource Interconnection Agreement (MN DIA)

This is an Assignment of Interconnection Agreement ("Assignment").

There is an Interconnection Agreement, including any and all Attachments thereto including any and all amendments ("Agreement") by and between _____ ("Area EPS Operator"), having its principal office and place of business located at _____, [*city*], Minnesota, [*zip code*], and [*insert name of current party to the Interconnection Agreement*] ("Assignor"), originally signed by the Area EPS Operator on [*insert date of signature to Interconnection Agreement by Area EPS Operator*] for a Distributed Energy Resource (DER) with a Nameplate Rating of ____ kW (AC) located at [*insert address*].

The Assignor intends to convey its interest in the above-referenced DER to [insert name of new purchaser of the service address shown in Interconnection Application and in one line diagram attached to Agreement] ("Assignee"), and the Assignor intends to assign the Agreement to the Assignee.

Upon the execution of this Assignment by the Assignor, Assignee and the Area EPS Operator, agree as follows:

1. **Capitalized Terms**. Capitalized terms used but not defined herein shall have the meanings set forth in the Agreement.

2. **Consent to Assignment**. The Assignor hereby irrevocably assigns the Agreement in all respects to the Assignee and the Assignee accepts the assignment thereof in all respects.

3. **Amendment to Agreement**. The Area EPS Operator consents to this assignment and, as assigned, the Agreement is hereby amended so that wherever the name of the Assignor is used therein it shall mean the Assignee. It is further agreed that all terms and conditions of the Agreement, as amended by this Assignment, shall remain in full force and effect.

4. **Payments by Area EPS Operator**. Any and all payments made by Area EPS Operator under the Agreement to either the Assignor or the Assignee shall be deemed to have been made to both and shall discharge the Area EPS Operator from any further liability with regard to said payment.

5. **Financial Obligations of Assignor and Assignee**. Any and all financial liability, including but not limited to amounts due, from the Interconnection Customer to the Area EPS Operator, occurring or accruing under the Agreement on or before the date of the signature of the Area EPS Operator to this Assignment shall be deemed to be the obligation of both the Assignor and Assignee, and the Area EPS Operator may recover any such amounts jointly and severally from the Assignor and Assignee.

6. **Contact information**. The following information updates and replaces the designated information as set forth on page 3 of the Agreement, and in Articles 13.1, 13.2, 13.3, and 13.4 of the Agreement.

Page 3	Interconnection Customer: _____ Attention: _____ Address: _____ City: _____ State: _____ Zip: _____ Phone: _____ Email: _____
Article 13.1 General	Interconnection Customer: _____ Attention: _____ Address: _____ City: _____ State: _____ Zip: _____ Phone: _____ Email: _____
Article 13.2 Billing and Payment	Interconnection Customer: _____ Attention: _____ Address: _____ City:_____ State:_____ Zip:_____
Article 13.3 Alternative Forms of Notice	Interconnection Customer: _____ Attention: _____ Address: _____ City: _____ State:_____ Zip:_____ Phone: _____ Email: _____
Article 13.4 Designated Operating Representative	Interconnection Customer's Operating Representative: Interconnection Customer: _____ Attention: _____ Address: _____ City: _____ State:_____ Zip:_____ Phone: _____ Email: _____

7. **Signatures.** Facsimile or electronic signatures, or signatures to this Assignment sent electronically, shall have the same effect as original signatures. Photocopies, or electronically stored versions of this Assignment, shall have the same validity as the original.

The Area EPS Operator, Assignor, and Assignee have executed this Assignment as of the dates as set forth below.

Assignor (*include name of legal entity*)

Signature: _____

Name: _____

Title: _____

Date: _____

Area EPS Operator (*include name of legal entity*)

Signature: _____

Name: _____

Title: _____

Date: _____

Assignee *(include name of legal entity)*

Signature: _____

Name: _____

Title: _____

Date: _____