Minnesota Department of Commerce
Division of Energy Resources

Conservation Applied Research & Development (CARD) Program
FINAL REPORT

COST-BENEFIT ANALYSIS OF ENERGY EFFICIENT TECHNOLOGIES AVAILABLE FOR USE IN ROADWAY LIGHTING

Prepared for: Minnesota Department of Commerce, Division of Energy Resources
Prepared by: Energy Management Solutions, Inc.

EMS
Energy Management Solutions, Inc.

DECEMBER 2012
OES-04042011-36352

Prepared by:

Primary Author(s):
Gary A. Swanson
Cole A. Carlson

Energy Management Solutions, Inc.
7935 Stone Creek Dr, Suite 140
Chanhassen, MN 55317
952-767-7450
www.emsenergy.com

Project Partner
City of Chanhassen Public Works Department

Contract Number: 36352

Prepared for:
Minnesota Department of Commerce

Mike Rothman
Commissioner

Bill Grant
Deputy Commissioner
Division of Energy Resources

Bruce Nelson
Project Manager
651-539-1860
Bruce.nelson@state.mn.us

ACKNOWLEDGEMENTS

This project was supported in part (or in whole) by a grant from the Minnesota Department of Commerce, Division of Energy Resources through the Conservation Applied Research and Development (CARD) program, which is funded by Minnesota ratepayers.

The authors would also like to acknowledge the following individuals and organizations for their contributions to the project:

Burt Holm	Pulse Lighting & Controls
Scott Johnson	Graybar Services, Inc.
Scott Manning	Cooper Lighting
Mark Mlazgar	R.L. Mlazgar Associates
Bruce Nelson	Minnesota Department of Commerce, Division of Energy Resources
Paul Oehme	City of Chanhassen Public Works
John Paulson	City of Hutchinson
Andy Schneider	R.L. Mlazgar Associates
Dennis Schumacher	TSR Lighting
Brandon Smith	Holophane
Jerry Strand	Luma Sales Associates
Mike Wegler	City of Chanhassen Public Works
Brian Zilca	Killmer Electric Company, Inc.

NOTIFICATION

This report does not necessarily represent the views of the Department of Commerce (Commerce), its employees or the State of Minnesota (State). Commerce, the State, its employees, contractors and subcontractors make no warrant, express or implied, and assume no legal liability for the information in this report; nor does any party represent that the uses of this information will not infringe upon privately owned rights. When applicable, the State will evaluate the results of this research for inclusion in Conservation Improvement Program (CIP) portfolios and communicate its recommendations in separate document(s).

EXECUTIVE SUMMARY

This report details the major design and specification concerns of roadway lighting and examines the potential for induction and light-emitting diode (LED) luminaires to save energy and money while providing high-quality lighting for motorists and pedestrians. This was accomplished by creating a 10-step how-to manual for the appropriate selection of LED roadway luminaires and by providing a comprehensive discussion of induction and LED roadway luminaire technologies. Issues identified as potential barriers to widespread implementation of these technologies were the following:

1) Warranties and technological advancement

2) Power supply performance and lifetime

3) Efficacious plateau of induction lighting

Economic analyses were also carried out to provide conservative yet realistic estimates for the cost-effectiveness of replacing current high-intensity discharge (HID) roadway lighting systems with LED roadway lighting systems. Results from the economic analyses show simple payback periods (SPPs) ranging from 8 to 12 years and internal rates of return (IRRs) of 8% to 10.5% over a 22-year practical lifetime based on August 2012 pricing. The most sensitive factors affecting these results were the monthly leasing rates for HID luminaires, the costs for purchasing and installing new poles, expected lifetimes of the LED luminaires, and the purchase costs for new LED roadway luminaires. Due to the myriad of factors affecting final costs, actual SPPs and IRRs could vary considerably from the range of values obtained here.

In addition, this report documents the implementation and outcome of a pilot demonstration of various LED technologies along Coulter Boulevard in Chanhassen, Minn. The demonstration compared energy consumption, light quality, light distribution, and luminaire performance between incumbent 250W high-pressure sodium (HPS) roadway luminaires and 10 different LED roadway luminaires from seven different manufacturers. In terms of energy consumption, the LED luminaires provided energy savings ranging from 50% to 80%. When comparing light quality, the average correlated color temperature (CCT) and color rendering index (CRI) of the LED luminaires was 4,800K and 70 CRI, respectively, which is a significant improvement from the 2,100K and 22 CRI light produced by HPS luminaires. This broader spectrum, relative to HPS, inherently increases safety levels by providing motorists and pedestrians with improved color identification and contrast recognition.

The measured light distribution of all LED luminaires was also more uniform, with average maintained illuminance levels ranging from 0.9 fc to 1.6 fc and avg./min. uniformity ratios of 1.9:1 to 8.2:1. Even though the average measured footcandle levels were lower than those produced by the incumbent HPS luminaires, the LED luminaire uniformity ratios were significantly better than those generated by the HPS luminaires with only one exception. In terms of performance, nearly all of the LED luminaires exhibited low backlight, uplight and glare (BUG) ratings and directed very few lumens toward the sky—a welcome quality for helping eliminate light pollution. The vast majority also had L_{70} lifetimes in excess of 100,000 hours and excellent Ingress Protection (IP) ratings. L_{70} measures the length of time it takes an LED light source to reach 70% of its initial light output.

CONTENTS

Executive Summary....iii
Figures.... vii
Tables....ix
Introduction....1
Overall Scope and Goals of Project.... 1
Definitions....3
Acronyms and Abbreviations.... 5
How-To Manual for Appropriate Selection of LED Luminaires....6
Step 1: Become Familiar with Basic Lighting Terminology and Technology.... 6
Step 2: Become Acquainted with Major Manufacturers....9
Step 3: Fill out "LED Roadway Specification" Form & Send to Manufacturers.... 9
Step 4: Request and Examine Useful Life, Operating Temp. Data and Lumen Depreciation....10
Step 5: Request and Examine Photometric Reports and AGi32 Simulation.... 10
Step 6: Ask Manufacturer about Detailed Warranty....10
Step 7: Inquire about Control Systems.... 10
Step 8: Evaluate Economic Payback and Life-Cycle Cost.... 11
Step 9: Obtain Two Working Samples and Install on Adjacent Poles to Verify Performance....11
Step 10: Assess Glare and Compare to Currently Installed Technology....11
Checklist of Completed Steps....11
Summary.... 12
LED Roadway Specification Form....13
LED and Induction Lighting....17
Overview of Technology.... 17
Energy Efficiency.... 18
Durability.... 19
Color.... 19
Lifetime and Lumen Maintenance.... 19
Visually Effective Lumens or "Pupil Lumens"....21
Distribution and Glare....22
Potential Barriers.... 23
Warranties and Technological Advancement....23

Power Supply Performance and Lifetime....24
Efficacious Plateau of Induction Lighting....24
Adaptive Lighting Controls....25
Timers....26
Photocells/Photoreceptors....26
Occupancy/Motion Sensors....26
Retrofitting vs. New Fixtures....26
Leasing from Investor Owned Utilities....27
Demand-Side Management Opportunities....27
CIP Considerations....28
Economic Analysis: Chanhassen Case Study....28
Levelized Cost of Energy and Services....29
Energy Charge....29
Luminaire Lifetime....29
Initial Purchase Costs....29
Installation and Maintenance Costs....30
Discount Rate and Uniform Series Present Worth....30
Rebates....30
Summary of Assumptions....30
Discussion of Results....32
In-Depth Analysis....32
Pilot Demonstration of LED Roadway Luminaires....33
Site Description....33
Existing Luminaires....34
New Luminaires....34
American Electric Lighting ATB0 20A Luminaire....35
CREE XSP1 Luminaire....36
Cooper Lighting NAVION 03 SL2 Luminaire….....37
Toshiba TGT Luminaire....38
American Electric Lighting ATB0 30B Luminaire....39
CREE XSP2 Luminaire....40
Cooper Lighting NAVION 02 SL3 Luminaire….....41
GE ERS2 Luminaire....42

Hubbell Cimarron CL1 Luminaire....43
SDL Lighting 25F Luminaire.... 44
Comparison of Specifications....45
Power Measurement and Verification.... 46
Field Measurement Results....47
Discussion of Results....53
Conclusion.... 54
References....56
Appendix A: Additional Resources.... 57
Appendix B: In-Depth Analysis of Case Study with City of Chanhassen....58
Appendix C: Nighttime Photographs of Operational LED Roadway Luminaries....65

FIGURES

Figure 1: Flow chart for appropriate specification and selection of LED roadway luminaires.....7
Figure 2: Historical timeline of LED efficacy..... 17
Figure 3: Graphic comparison of light output between comparable HPS and LED fixtures..... 18
Figure 4: Lumen maintenance and failure behavior..... 20
Figure 5: Lumen maintenance curves for lighting fixtures at various operating temperatures..... 20
Figure 6: Discrepancy of distribution and glare between MV and LED roadway lights..... 22
Figure 7: Typical roadway lighting polar plots.....23
Figure 8: Luminaire Classification System.....23
Figure 9: Google Earth image of Coulter Blvd.....33
Figure 10: Street views of Coulter Blvd..... 34
Figure 11: Incumbent 250W HPS roadway luminaire.....34
Figure 12: AEL Autobahn Series ATB0 luminaire..... 35
Figure 13: Photometric report for AEL's 20A luminaire..... 35
Figure 14: CREE XSP1 luminaire……..... 36
Figure 15: Photometric report for CREE's XSP1 luminaire..... 36
Figure 16: Cooper Lighting Navion 03 luminaire…..... 37
Figure 17: Isofootcandle plot for Cooper's Navion 03 SL2 luminaire….....37
Figure 18: Toshiba TGT luminaire.....38
Figure 19: Photometric report for Toshiba's TGT luminaire..... 38
Figure 20: AEL Autobahn Series ATB0 30B luminaire..... 39
Figure 21: Photometric report for AEL Autobahn ATB0 30B luminaire..... 39
Figure 22: CREE XSP2 luminaire.....40
Figure 23: Photometric report for CREE's XSP2 luminaire..... 40
Figure 24: Cooper Lighting Navion 02 luminaire…..... 41
Figure 25: Isofootcandle plot for Cooper's Navion 02 SL3 Luminaire.....41
Figure 26: GE ERS2 Luminaire.....42
Figure 27: Photometric report for GE's ERS2 Luminaire.....42
Figure 28: Hubbell Cimarron CL1 luminaire..... 43
Figure 29: Photometric report for Hubbell's Cimarron CL1 luminaire.....43
Figure 30: SDL Lighting 25F luminaire……..... 44
Figure 31: Photometric report for SDL Lighting's 25F luminaire..... 44
Figure 32: Field measurement results for the AEL ATB0 20A luminaire..... 48
Figure 33: Field measurement results for the CREE XSP1.....48
Figure 34: Field measurement results for the Cooper Navion 03 SL2 luminaire.....49

Figure 35: Field measurement results for the Toshiba TGT luminaire..... 49
Figure 36: Field measurement results for the AEL ATB0 30B luminaire.....50
Figure 37: Field measurement results for the CREE XSP2 luminaire.....50
Figure 38: Field measurement results for the Cooper 02 SL3 luminaire.....51
Figure 39: Field measurement results for the GE ERS2 luminaire..... 51
Figure 40: Field measurement results for the Hubbell Cimarron luminaire.....52
Figure 41: Field measurement results for the SDL 25F-LE3 luminaire.....52

TABLES

Table 1: Manufacturers Invited to Supply LED Roadway Fixture Samples for the Study.....1

Table 2: Average Rated Performance Values for Various Lamp Types.....9

Table 3: Various Lamps with Applied Corresponding $(S/P)^{0.78}$ Correction Factor..... 21

Table 4: SPP, NPW, and LCC of LED luminaires for Different Rate Code Adjustments.....31

Table 5: Summary and Comparison of LED Roadway Luminaire Specifications.....45

Table 6: Laboratory Power Measurement and Verification Results.....46

INTRODUCTION

Overall Scope and Goals of Project

There are an estimated 487,000 streetlights in Minnesota and more than 13 million nationwide. A number of new, energy-efficient technologies have emerged for replacing older, less efficient high-intensity discharge (HID) roadway lighting—including light-emitting diode (LED) and induction lights. While these technologies could save state and local governments hundreds of millions of kilowatt-hours (kWh) per year plus millions of dollars in avoided utility, maintenance, and recycling costs, they have not yet gained widespread acceptance. One reason is a proliferation of misleading information.

This project quantified the costs and benefits of replacing existing roadway lighting with more energy-efficient options. It included a comparative analysis between new roadway lighting technologies and common equipment being used today, evaluating both on the basis of energy savings, installation requirements, and long-term maintenance. It also identified perceived barriers to implementing LED and induction lighting technologies in this market. The findings and recommendations are easily replicable and could empower state and local governments to install new roadway lighting technologies.

The authors considered both LED and induction technologies before selecting LED technology for this study. Four factors led to this decision: 1) the rapidly decreasing price of LED technology is expected to make LED fixtures more cost competitive in the near future; 2) LEDs offer better optical control than induction fixtures due to their inherent directionality and ability to create precise, uniform distributions of light; 3) the continuous improvement in LED efficacy has met or surpassed the performance of induction lighting sources; and 4) it was felt that LED technology represents a new standard in lighting that reflects Minnesota's ambitions as a national leader in energy conservation and efficiency.

Table 1: Manufacturers Invited to Supply LED Roadway Fixture Samples for the Study

Manufacturer	Website	Invited	Supplied Samples
American Electric Lighting	http://www.americanelectriclighting.com/	X	X
CREE	http://www.cree.com/lighting	X	X
Cooper Lighting	http://www.cooperindustries.com	X	X
Everlast Lighting	http://www.everlastlight.com	X	
GE Lighting	http://www.gelighting.com/na/	X	X
Holophane Lighting	http://www.holophane.com	X	
Hubbell Lighting	http://www.hubbelllighting.com	X	X
Lithonia Lighting	http://www.lithonia.com	X	
Philips	www.lighting.philips.com/	X	
LSI Industries	http://www.lsi-industries.com/	X	
SDL Lighting	http://www.sdllighting.com/	X	X
Toshiba	http://www.toshiba.com	X	X

The manufacturers listed in Table 1 offer lines of LED products that include everything from bare bones lamps to retrofit kits and complete luminaire assemblies. They also supply HID and induction roadway lighting technology. Researchers used a variety of LED products from these manufacturers to generate field test data for the cost-benefit analysis, limiting options to the most practical solutions for various roadway lighting challenges. Examples of various LED roadway products are displayed below:

LED shoebox fixture

LED acorn fixture

LED cobra head fixture

Visibility is defined as the state of being perceived by the eye. The purpose of roadway lighting is to attain a level of visibility that enables motorists and pedestrians to see all significant roadway details quickly, distinctly, and with certainty. This includes the alignment of the road (its direction and surroundings) and any obstacles on or about to enter the roadway. Nearly all aspects of traffic safety involve visibility. Some factors that directly influence visibility are:

- Brightness of an object on or near the roadway
- General brightness of roadway background – ambient light
- Size of object and identifying detail
- Contrast between an object and its surroundings
- Contrast between pavement and its surroundings as seen by the observer
- Time available for seeing the object
- Discomfort glare: Ocular discomfort that doesn't affect visual performance
- Disability glare: Reducing ability to see or spot an object
- Blinding glare: Glare so intense that for an appreciable length of time no object can be seen
- Driver vision
- Condition of windshield

Good visibility on roadways at night results from lighting (both fixed and vehicular), which provides adequate pavement illumination with good uniformity.[1]

[1] Minnesota Department of Transportation. Roadway Lighting Design Manual, May 2010. Available at: <http://www.dot.state.mn.us/trafficeng/lighting/2010_Roadway_Lighting_Design_Manual.pdf>

Definitions[2]

Ballast: A device used to operate fluorescent and HID lamps. The ballast provides the necessary starting voltage while limiting and regulating the lamp current during operation.
BUG Rating: A rating system developed by the Illuminating Engineering Society of North America (IESNA) to describe the amount of stray light escaping from an outdoor lighting luminaire. “B” stands for backlight, “U” stands for uplight, and “G” stands for glare. A rating of 0 (minimum) to 5 (maximum) is assigned to each letter of the BUG acronym.
Candela Distribution: A curve, often on polar coordinates, illustrating the variation of luminous intensity of a lamp or luminaire in a plane through the light center.
Coefficient of Utilization (CU): The ratio of lumens from a luminaire received on the work plane to the lumens produced by the lamps alone.
Color Rendering Index (CRI): A scale of the effect of a light source on the color appearance of an object compared to its color appearance under a reference light source. This is expressed on a scale of 1 to 100, where 100 indicates no color shift. A low CRI rating suggests that the colors of objects will appear unnatural under that particular light source.
Correlated Color Temperature (CCT): A specification of the color appearance of a light source relating the color to a reference source heated to a particular temperature. It is measured in Kelvin. The measurement can also be described as the "warmth" or "coolness" of a light source. Generally, sources below 3,200K are considered "warm" while those above 4,000K are considered "cool" sources.
Contrast: The relationship between the luminance of an object and its background.
Diffuse: Term describing dispersed light distribution. Refers to the scattering or softening of light.
Electronic Driver: A necessary device for LEDs that converts high voltage 60 Hz AC power to low voltage DC power required by LEDs and protects them from line-voltage fluctuations. It is analogous to a ballast in a HID lighting system.
Efficacy: A metric used to compare light output to energy consumption. Efficacy is measured in lumens per watt (LPW). Efficacy is similar to efficiency but is expressed in dissimilar units. For example, if a 100-watt source produces 9,000 lumens, then the efficacy is 90 LPW.
Glare: The effect of brightness or differences in brightness within the visual field sufficiently high to cause annoyance, discomfort, or loss of visual performance.
Illuminating Engineering Society (IES): Internationally recognized technical authority on illumination whose stated mission is “To improve and lighted environment by bringing together those with lighting knowledge and by translating that knowledge into actions that benefit the public”.
Illuminance: The density of luminous flux incident on a surface, measured in footcandles (fc) or lux (lx). One footcandle is the illumination of a surface one square foot in area on which there is a uniformly distributed luminous flux of one lumen. One lux is the illumination of one square meter in area on which there is a uniformly distributed luminous flux of one lumen. One footcandle is 10.76 lux.
Ingress Protection (IP) Rating: A rating system that classifies and rates the degree to which mechanical and electrical enclosures provide protection against the intrusion of solid objects (hands, fingers, tools, dust) and water. Rating is often given with the letters “IP” followed by two numbers. The first number indicates the degree of protection against solid objects. The second number classifies the protection against water. Please refer to page 16 for examples of what specific numbers represent.

[2] Majority of definitions provided by Architectural Lighting Magazine. Available at: <http://www.archlighting.com/table-of-contents/the-magazine.aspx>

Lamp: Actual apparatus or bulb that produces light (fluorescent tube, incandescent bulb, etc.).
Isofootcandle Plot: Chart used to describe the light pattern a luminaire produces. It displays plots or lines of equal footcandle levels on the work plane with the fixture at a designated mounting height.
Lamp Lumen Depreciation (LLD): A factor that represents the reduction of lumen output over time. The factor is commonly used as a multiplier to the initial lumen rating in illuminance calculations which compensates for the lumen depreciation. The LLD factor is a dimensionless value between 0 and 1.
Light: Electro-magnetic energy emitted in the visible portion of the spectrum.
Light Loss Factor (LLF): Factors that allow for a lighting system's operation at less than initial conditions. These factors are used to calculate maintained light levels. LLFs are divided into two categories, recoverable and non-recoverable. Examples are lamp lumen depreciation and luminaire surface depreciation.
Lumen: A unit of light flow, or luminous flux. The lumen rating of a lamp is a measure of the total light output of the lamp.
Luminaire: A complete unit consisting of a lamp or lamps together with the parts designed to distribute the light, position and protect the lamps, and connect the lamps to the power supply.
Luminaire Efficiency: The ratio of total lumen output of a luminaire to the lumen output of the lamps, expressed as a percentage. For example, if two luminaires use the same lamp, more light will be emitted from the fixture with the higher efficiency.
Luminous Exitance: Total amount of luminous flux reflected or transmitted by a source or surface (direction independent), measured in fc or lx.
Luminous Flux: Time rate flow of light, measured in lumens (lm). One lumen is the amount of light which falls on an area of one square foot, every point of which is one foot away from a source of one candela. A light source of one candela emits a total of 12.57 lumens.
Luminous Intensity: The force of luminous flux in a specified direction, measured in candela (cd).
Optics: A term referring to the components of a light fixture (such as reflectors, refractors, lenses, louvers) or to the light emitting or light-controlling performance of a fixture.
Photocell: A light sensing device used to control luminaires and dimmers in response to detected light levels.
Photometric Report: A set of printed data describing the light distribution, efficiency, and zonal lumen output of a luminaire. This report is generated from laboratory testing.
Restriction of Hazardous Substances Directive (RoHS): A legislative initiative that restricts the use of specific hazardous materials in the manufacture of various types of electrical equipment.
Reflectance: The ratio of light reflected from a surface to the light incident on the surface. The reflectance of a dark carpet is around 20%, and a clean white wall is roughly 50% to 60%.
Specular: Mirrored or polished surface. The angle of reflection is equal to the angle of incidence. This word describes the finish of the material used in some louvers and reflectors.
Nationally Recognized Testing Laboratories (NRTLs): A set of recognized independent organizations that provide rigorous product safety testing and certification services to manufacturers. When products pass these tests they can be labeled (and advertised) as NRTL Certified.
Visibility: The quality or state of being perceivable by the eye.

Acronyms and Abbreviations

A: ampere(s)
ANSI: American National Standards Institute
ASHRAE: American Society of Heating, Refrigerating and Air-Conditioning Engineers
CCT: correlated color temperature
cd: candela
CIP: conservation improvement program
CRI: color rendering index
CU: coefficient of utilization
DSM: demand-side management
fc: Footcandle
HID: high-intensity discharge
HPS: high-pressure sodium
Hz: hertz
IES: Illuminating Engineering Society
IESNA: Illuminating Engineering Society of North America
IOU: investor-owned utility
IRR: internal rate of return
K: Kelvin
kWh: kilowatt-hour(s)
LCC: life-cycle cost
LED: light-emitting diode
LLD: lamp lumen depreciation
LLF: light loss factor
LPW: lumens per watt
lm: lumen
lx: lux
MH: metal halide
MWh: megawatt-hour(s)
NPW: net present worth
NEMA: National Electrical Manufacturers Association
RFI: radio frequency interference
RoHS: Restriction of Hazardous Substances Directive
SPP: simple payback period
NRTL: Nationally Recognized Testing Laboratory
V: volt(s)
W: Watt(s)

HOW-TO MANUAL FOR APPROPRIATE SELECTION OF LED ROADWAY LUMINAIRES

Roadway lighting decisions can be intimidating to the uninitiated, with technology advancing at an astounding rate. This manual is a resource to assist cities and municipalities with proper specification and selection of light-emitting diode (LED) roadway lighting. It provides a thorough step-by-step process for requesting and selecting roadway lighting luminaires from manufacturers. A flow chart depicting this process is provided on the following page as Figure 1.

Properly designed and maintained roadway lighting will provide comfort and safety during nighttime conditions for both vehicular and pedestrian traffic. Emphasis should be placed on long-life, white-light products that improve color rendering and reduce maintenance costs relative to current high-intensity discharge (HID) roadway fixtures.

Step 1: Become Familiar with Basic Lighting Terminology and Technology

Before beginning any roadway lighting project, it is important to understand basic terms and technologies used in the industry. This will lead to informed decisions that meet specific lighting performance needs and energy-saving goals.

Basic Lighting Terminology

- **Coefficient of Utilization (CU):** The ratio of lumens from a luminaire received on the work plane to the lumens produced by the lamps alone.
- **Color Rendering Index (CRI):** A scale of the effect of a light source on the color appearance of an object compared to its color appearance under a reference light source. This is expressed on a scale of 1 to 100, where 100 indicates no color shift. A low CRI rating suggests that the colors of objects will appear unnatural under that particular light source.
- **Correlated Color Temperature (CCT)**: The color temperature is a specification of the color appearance of a light source relating the color to a reference source heated to a particular temperature. The measurement can be described as the "warmth" or "coolness" of a light source. Generally, sources below 3,200K are considered "warm" while those above 4,000K are considered "cool."
- **Efficacy**: A metric used to compare light output to energy consumption. Efficacy is measured in lumens per watt (LPW). Efficacy is similar to efficiency, but is expressed in dissimilar units. For example, if a 100-watt source produces 9,000 lumens, then the efficacy is 90 lumens per Watt.
- **Lamp:** Actual apparatus or bulb that produces light (fluorescent tube, incandescent bulb, etc.)
- **Light**: Electro-magnetic energy emitted in the visible portion of the spectrum.
- **Lumen:** A unit of light flow, or luminous flux. The lumen rating of a lamp is a measure of the total light output of the lamp.
- **Luminaire**: A complete unit consisting of a lamp or lamps together with the parts designed to distribute the light, position and protect the lamps, and connect the lamps to the power supply.
- **Photometric Report**: A set of printed data describing the light distribution, efficiency, and zonal lumen output of a luminaire. This report is generated from laboratory testing.

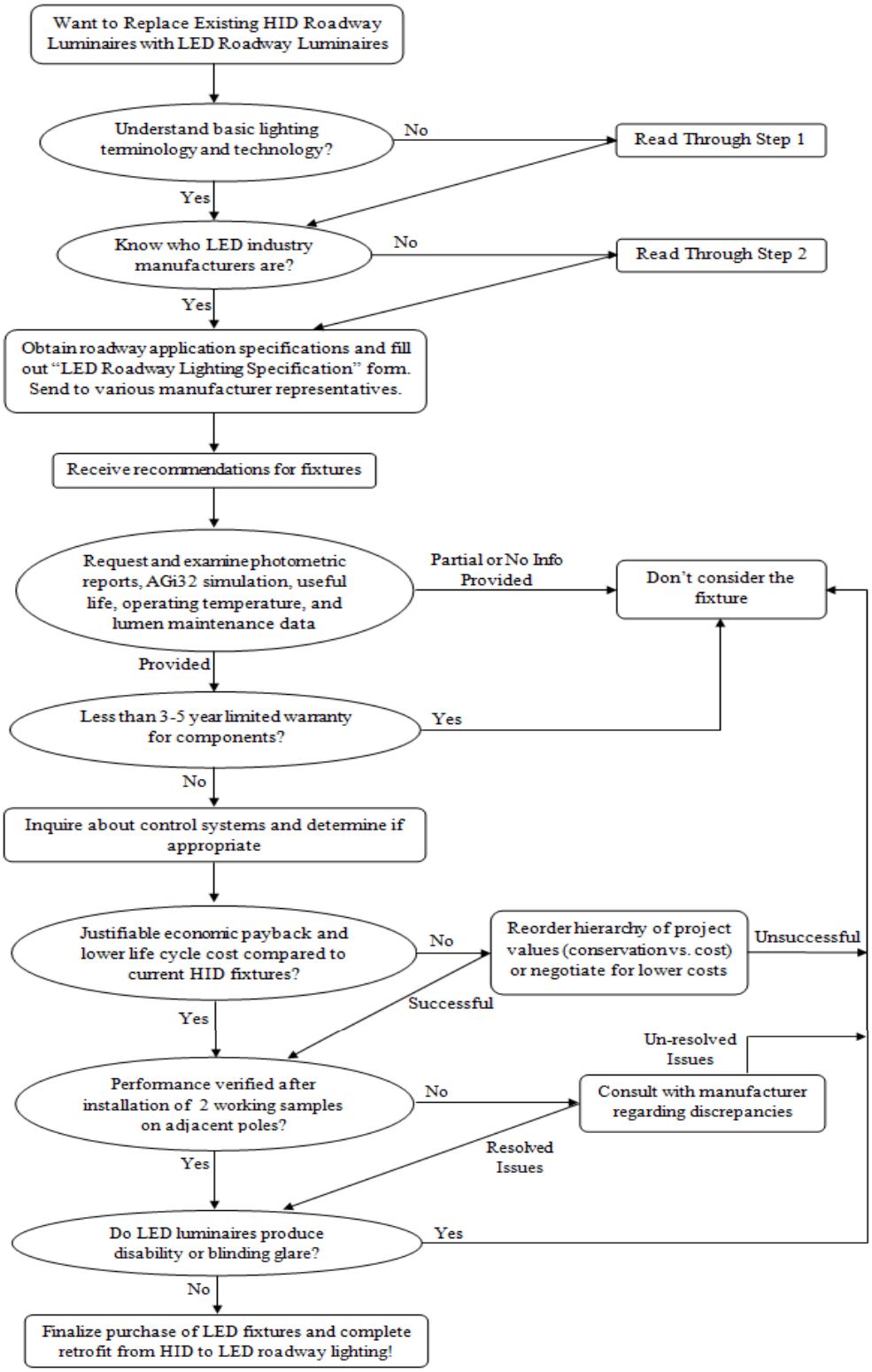

Figure 1: Flow chart for appropriate specification and selection of LED roadway luminaires

Mature Roadway Lighting Technologies

Mercury Vapor (MV): MV was the first HID lamp developed and is commonly used for "security" lighting. MV lamps are a quartz tube filled with pressurized mercury vapor that produces light when an electrical current passes through the vapor. Although it has long lamp life, its efficacy is quite low.

Metal Halide (MH): MH fixtures are another reliable source of HID light. They often are used in sports facilities or where accurate color rendering is required. MH lamps operate similarly to HPS, but use metal salts instead of gas in the arc tube to create a blue-white light.

Pulse Start MH (PSMH): Similar in construction to MH, this lamp uses a high-efficiency, low-crest factor ballast which allows for faster warm up and hot re-strikes in up to 50% less time.

High Pressure Sodium (HPS): A type of HID lamp, HPS is a frequent mainstay of roadway lighting that uses sodium as a primary gas. It produces light when an arc is struck in the lamp. The resulting light output begins as pink and warms to an orange tint.

Low Pressure Sodium (LPS): Used infrequently, this old technology utilizes a large lamp filled with sodium gas as its catalyst. Unlike HPS, these lamps develop significantly lower internal pressure and produce a very yellow light and low output.

Emerging Roadway Lighting Technologies

Induction: An induction lamp is an electrodeless light source in which a high-frequency generator and power coupler are used to create electromagnetic fields that excite mercury gas contained inside a vacuum-sealed glass tube. This is in contrast to typical lamps, which utilize physical, electrical connections through the glass to transfer power. As in fluorescent lights, the excited mercury gas inside the tube emits ultraviolet (UV) radiation, which in turn is converted into visible light by the phosphor coating on the tube. Advantages include 60,000 to 70,000 hours of operating lifetime, high efficacy, shock resistance, high power factor, ability to operate in very low temperatures, instant on/off, and hot re-strike. Disadvantages include the ability to produce radio frequency interference, large/bulky size, contains mercury (not RoHS compliant), and very limited optical control.

Light Emitting Diode (LED): LEDs represent a new type of light source where light is created from an electrical current passing across a semiconductor instead of a filament or arc chamber. Once the electrons in the semiconductor are excited, they move to a lower energy state. In the process, they release energy in the form of photons. The frequency of the emitted photons dictates the color of light produced by each LED. Multiple LEDs are networked together in a single fixture. Together they generate the appropriate light output for each particular application. Advantages include 50,000 to 100,000 hours of operating lifetime, high and quickly improving efficacy, shock resistance, excellent optical control, instant on/off, frequent cycling ability, small/compact size, can be RoHS compliant, and dimmability. Disadvantages include high initial cost, temperature-dependent performance, and voltage and current sensitivity.

Table 2: Average Rated Performance Values for Various Lamp Types

Type of Lamp	Efficacy (LPW)	Average Lamp Life (hours)
Mercury Vapor	13 – 48	12,000 – 24,000+
Metal Halide	60 – 80	10,000 – 15,000
Pulse Start MH	60 – 120	15,000 – 30,000
High Pressure Sodium	60 – 110	15,000 – 25,000
Low Pressure Sodium	100 – 180	10,000 – 20,000
Induction	62 – 95	60,000 – 70,000
LED	50 – 95	50,000 – 100,000

Step 2: Become Acquainted with LED Industry Manufacturers

The power quality of LEDs can vary significantly among manufacturers so due diligence is required in their proper selection and use. While new manufacturers are emerging every day, it is important to recognize the value of well-established manufacturing firms providing research and development (R&D) for new technologies, general quality control, and warranties. Some of the manufacturers that have been producing LED lighting for a long time include:

- American Electric Lighting
- Beta LED
- Cooper Lighting
- Everlast Lighting
- GE Lighting
- Holophane
- Hubbell Lighting
- LED Roadway Lighting
- Lithonia Lighting
- LSI Industries
- Osram Sylvania
- Philips
- Toshiba Lighting

(Note: This is not a complete list but a sample of manufacturers discovered while researching this report.)

Step 3: Fill out "LED Roadway Lighting Specification" Form and Send to Manufacturers

The "LED Roadway Lighting Specification" form provided at the end of this manual should be filled out to the extent possible for the roadway under consideration and sent to various manufacturers. It contains all relevant and necessary information for manufacturers to recommend specific LED roadway fixtures that meet specifications. (Note: Some manufacturers have an extensive variety of options. Selecting the appropriate luminaire for an application is critical.)

Step 4: Request and Examine Useful Life, Operating Temperature Data, and Lumen Depreciation

Since high temperatures can degrade and devastate the useful lifetime of LEDs, thermal management is critical to long-term performance. The reported useful life of an LED is often defined as the operating time in hours for the device to depreciate a certain amount from its initial light output. The most common rating is L_{70}, which is the estimated number of hours the LED luminaire will take to reach 70% lumen output—or a 30% reduction from initial lumen levels. An excellent lifetime range for LED roadway fixtures is 50,000 to 100,000 hours, or roughly 20 years of operation at 12 hours per day.

Step 5: Request and Examine Photometric Reports and AGi32 Simulation

It is important to examine the photometric reports and differentiate between the downward streetside (forward light) and downward houseside (backlight) lumens. For most roadway fixture applications, the higher the ratio of forward light to backlight, the better (3:1 is an acceptable ratio). Another important optical characteristic of the luminaire is the uniformity of its distribution. The lower the uniformity ratio (average/minimum) the better.

AGi32 is an independent, comprehensive, photometrically correct, lighting design and simulation software program. It provides a simulated point-by-point report of illuminance levels on the target area and should verify that the specified illuminance requirements in the "LED Roadway Specification" form will be met. Most manufacturers have their own simulation software, however, AGi32 provides an independent analysis for a comparison of reports with uniform layout and formatting.

Step 6: Ask Manufacturer about Detailed Warranty

Acceptable LED roadway luminaire warranties run three to five years for parts. Important warranty questions to ask manufacturers: How do they plan to provide replacement parts if the technology changes so rapidly that in two years the original product is no longer available? Is there a warranty for lumen output dropping significantly below published levels? What amount of color shift is guaranteed with new LEDs?

Step 7: Inquire about Control Systems

It is important to ask manufacturers about the controls they offer alongside their fixtures and determine if they are suitable for the particular application. Here are some controls to consider which can be operated locally at the fixture head or centrally at a control panel:

1) Photocell Dimming–provides the ability to gradually or instantly turn roadway fixtures on and off depending upon ambient light levels. This could provide up to 25% additional energy savings.
2) Motion Sensors–can identify advancing vehicles and/or pedestrians and instruct roadway fixtures to provide appropriate illuminance levels as they approach.
3) Timed Illumination–allows lighting levels to be changed at specific times of the day and night rather than according to ambient, surrounding conditions (e.g., light levels with photoreceptors).

Step 8: Evaluate Economic Payback and Life-Cycle Cost

LED roadway lighting fixtures currently have a higher initial purchasing cost than traditional HID fixtures but have lower maintenance and energy costs. The economic evaluation of LED roadway luminaires is site specific and highly dependent upon electricity demand (kW) and consumption (kWh) rates, installation and maintenance labor costs, lighting controls utilized, quantity of fixtures ordered, and the availability of rebates. All of these factors should be taken into consideration when conducting the economic analysis for a roadway lighting project. A spreadsheet will be made available alongside this manual to provide simplified estimations for economic payback and life cycle cost.

Step 9: Obtain Two Working Samples and Install on Adjacent Poles to Verify Performance

It is important to test two fixtures on adjacent poles to observe their actual and combined illumination patterns. Complete this step for every LED roadway luminaire that is being considered. Be sure to order the appropriate mounting brackets and bolt configurations as well.

Step 10: Assess Glare and Compare to Currently Installed Technology

Prior to final selection of an LED roadway fixture, evaluate the amount of glare being produced by the installed samples. While certain fixtures may provide the most uniform distribution patterns with the least overall energy consumption, the very high angles (80° to 90°) of light necessary to accomplish this are often the same angles that create disability glare. Follow the Illuminating Engineering Society of North America (IESNA) recommendations for the type of roadway being scrutinized.

Checklist of Completed Steps when Considering a Switch to LED Roadway Lighting

- ☐ Become acquainted with terminology, technology, and major manufacturers.
- ☐ Use a CCT and CRI suitable for the roadway lighting application.
- ☐ Check Ingress Protection (IP) ratings and choose appropriately for application.
- ☐ Establish whether a RoHS compliant device is preferred.
- ☐ Determine roadway lighting distribution classification and recommended illuminance levles.
- ☐ Complete as much of the “LED Roadway Lighting Specification” form as possible.
- ☐ Send form to manufacturers.
- ☐ Request and examine operating temperature data and how it is used in luminaire efficacy and lumen depreciation calculations.
- ☐ Request and examine AGi32 simulations and photometric reports.
- ☐ Ask about detailed luminaire warranty (three to five years on parts is deemed reasonable for roadway lighting).
- ☐ Inquire about control systems and compatibility.
- ☐ Contact electricity provider and inquire about rebates for energy-efficient roadway lighting projects.
- ☐ Conduct an economic payback and life-cycle cost analysis.
- ☐ Obtain at least two working samples of each luminaire under consideration and install on adjacent poles to verify performance.
- ☐ Assess glare and compare to currently installed technology.

Summary

While several manufacturers offer induction lamps and fixtures, most of the legacy manufacturers have rapidly retooled to offer complete lines of LED fixtures. Millions of dollars are being invested in the research and development of higher performance LED chips, acrylic lenses, phosphor coatings, and electronic driver technology. Outdoor roadway and area lighting appear to be very promising applications for emerging LED technology. New LED fixtures provide better uniformity and quality of light on roadway surfaces while limiting glare and the unintended spill of light. As with any new product, careful and thorough investigation is mandatory for determining the appropriate fit for your specific application.

LED Roadway Lighting Specification Form

Customer Information and Contact

Date: _____

Name: _____

Mailing Address: _____

City: _____ State: _____

ZIP: _____

Contact Person: _____

Title of Contact: _____

Contact Phone #: _____

Ext: _____

Contact Fax #: _____

Contact Email Address: _____

Roadway Lighting Specifications

Style of Fixture		(cobra head, shoebox, etc.)
Pole Height & Type		(circular, square, etc.)
Arm Length		
Lamp Height		
Set-Back From Road		
Road Width		
Road Classification (See Attached Chart)		(Freeway, Local, etc.)
Road Location (See Attached Chart)		(Commercial, Intermediate, Residential)
Pavement Classification (See Attached Chart)		(R1, R2, R3, or R4)
Avg. Footcandles Required (See Attached Chart)		footcandles
Uniformity Ratio (See Attached Chart)		avg./min.
Distance A Between Poles (See Diagram B)		
Distance B Between Poles (See Diagram B)		

Minimum IP Rating (See Attached Rating Guide)		
Color Rendering Index (CRI)		
Correlated Color Temperature (CCT)		K
Lighting Distribution Classification (See Diagram C)		(Type I, II, etc.)
RoHS Compliance		(yes, no)
Pole-Arm Bolt Pattern Dimensions (If Applicable)		

Circle Corresponding Pole-Arm Bolt Pattern (If Applicable)

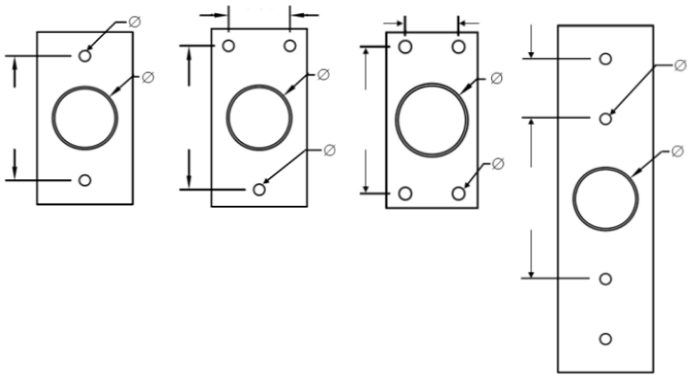

*** Manufacturer Note: Please provide AGi32 report showing combined roadway illuminance distribution for each fixture recommended**

Diagram A:
Roadway Fixture Dimensions

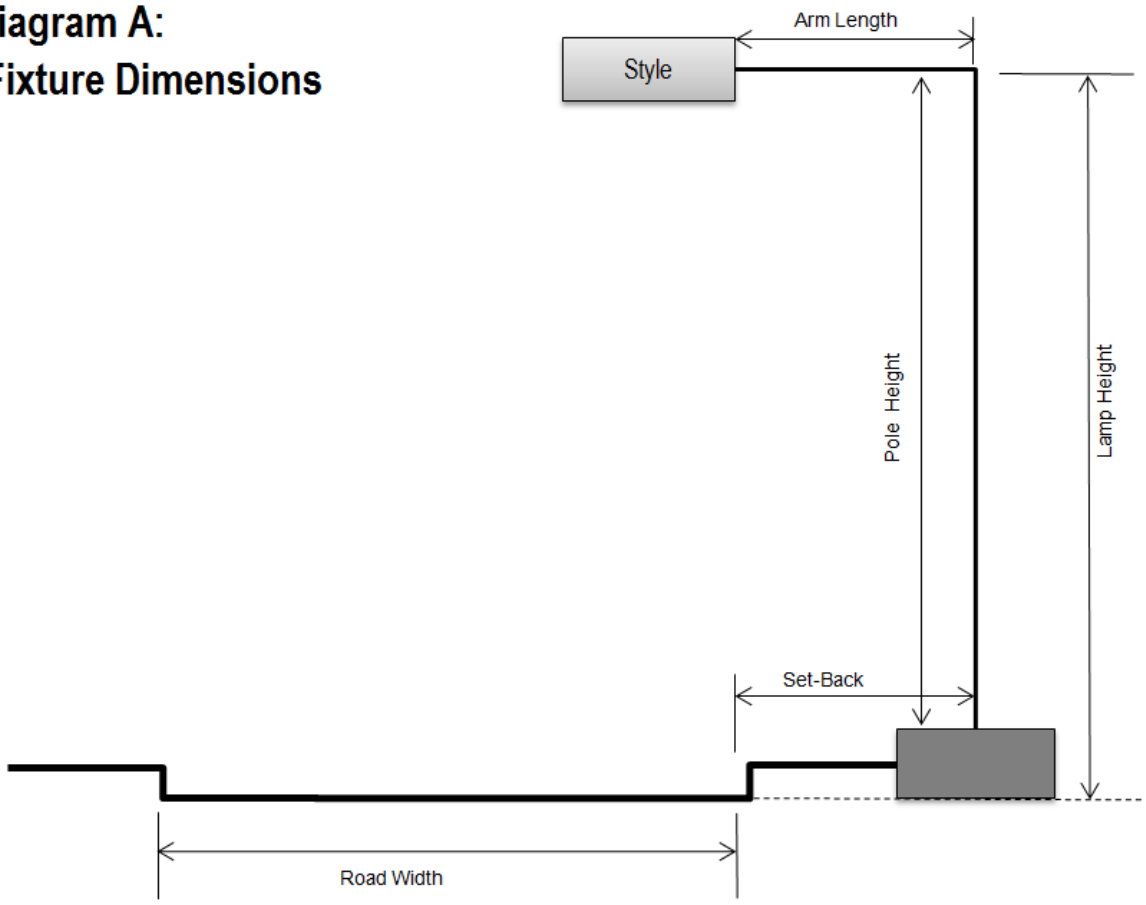

Diagram B:
Roadway Pole Configurations

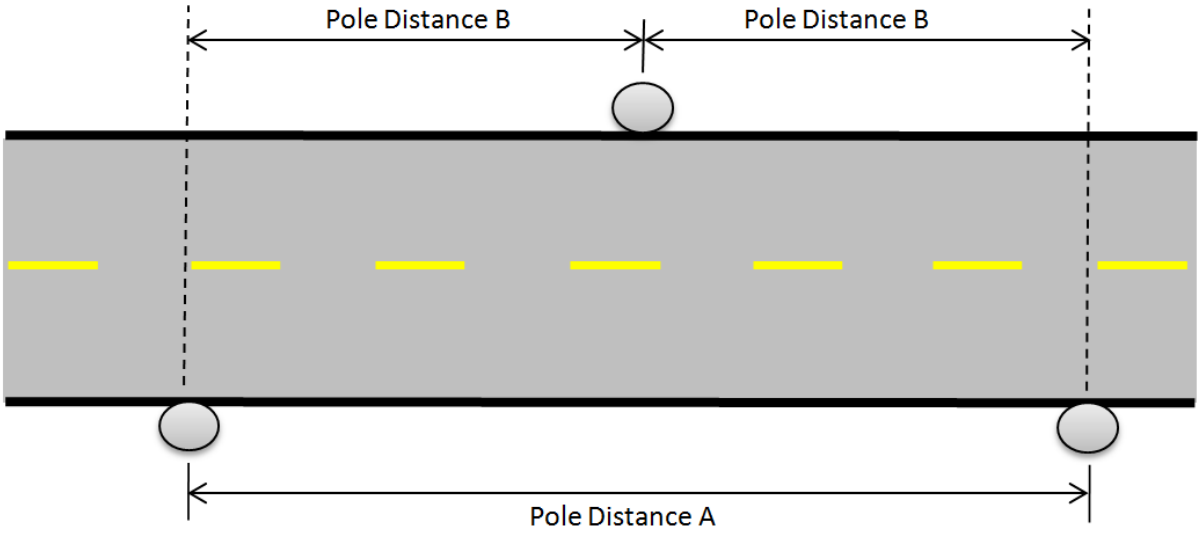

Diagram C:
Lighting Distribution Classification

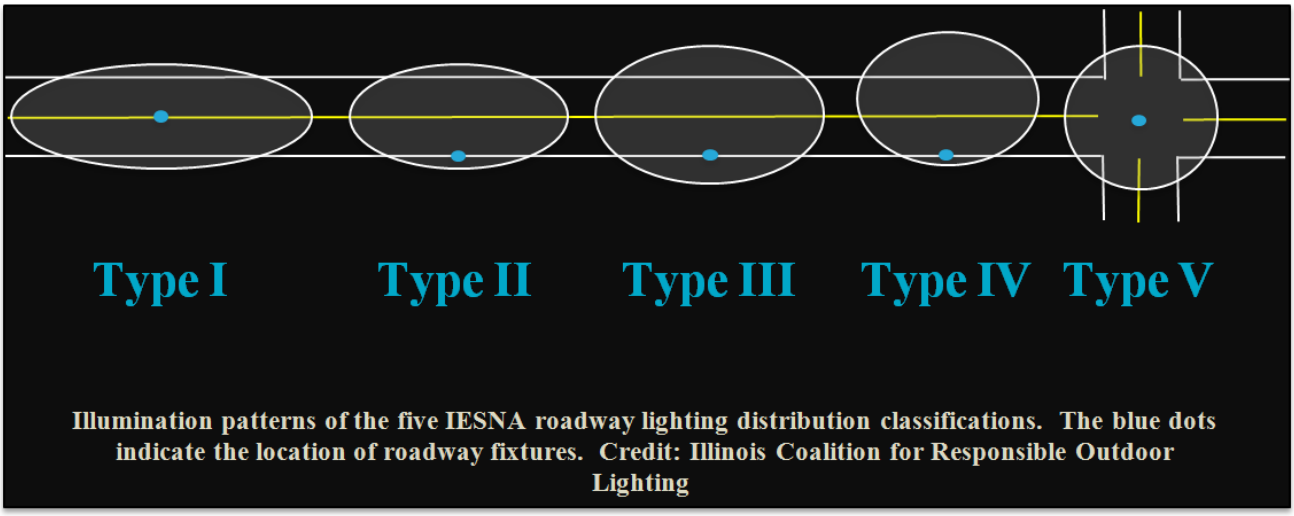

Illumination patterns of the five IESNA roadway lighting distribution classifications. The blue dots indicate the location of roadway fixtures. Credit: Illinois Coalition for Responsible Outdoor Lighting

The following chart contains the recommended minimum average maintained illumination and maximum uniformity ratios by facility classification and pavement classification (Source: May 2010 MN/DOT Roadway Lighting Design Manual)

Pavement Classification Notes:

1. R1 = cement/concrete
2. R2 = asphalt/gravel
3. R3 = asphalt/rough texture (typical highway)
4. R4 = asphalt/smooth texture

Roadway and Walkway Classification		R1		R2 or R3		R4		Maximum Uniformity Ratio (avg./min.)
Road	Location	Foot-candles	Lux	Foot-candles	Lux	Foot-candles	Lux	
Interstate and Other Freeways	Commercial	0.6 - 1.1	6 -12	0.6 - 1.1	6 - 12	0.6 - 1.1	6 - 12	3:1 or 4:1
	Intermediate	0.6 - 0.9	6 - 10	0.6 - 0.9	6 - 10	0.6 - 0.9	6 - 10	3:1 or 4:1
	Residential	0.6 - 0.8	6 - 8	0.6 - 0.8	6 - 8	0.6 - 0.8	6 - 8	3:1 or 4:1
Other Principal Arterials	Commercial	1.1	12	1.6	17	1.4	15	3:1
	Intermediate	0.8	9	1.2	13	1	11	3:1
	Residential	0.6	6	0.8	9	0.8	8	3:1
Minor Arterial	Commercial	0.9	10	1.4	15	1	11	4:1
	Intermediate	0.8	8	1	11	0.9	10	4:1
	Residential	0.5	5	0.7	7	0.7	7	4:1
Collectors	Commercial	0.8	8	1.1	12	0.9	10	4:1
	Intermediate	0.6	6	0.8	9	0.8	8	4:1
	Residential	0.4	4	0.6	6	0.5	5	4:1
Local	Commercial	0.6	6	0.8	9	0.8	8	6:1
	Intermediate	0.5	5	0.7	7	0.6	6	6:1
	Residential	0.3	3	0.4	4	0.4	4	6:1
Alleys	Commercial	0.4	4	0.6	6	0.5	5	6:1
	Intermediate	0.3	3	0.4	4	0.4	4	6:1
	Residential	0.2	2	0.3	3	0.3	3	6:1
Sidewalks	Commercial	0.9	10	1.3	14	1.2	13	3:1
	Intermediate	0.6	6	0.8	9	0.8	8	4:1
	Residential	0.3	3	0.4	4	0.4	4	6:1
Pedestrian Ways and Bike Ways		1.4	15	2	22	1.8	19	3:1
Rest Areas	Roadways	-	-	0.6 - 0.8	6 - 9	-	-	3:1 or 4:1
	Parking Areas	-	-	1	11	-	-	3:1 or 4:1

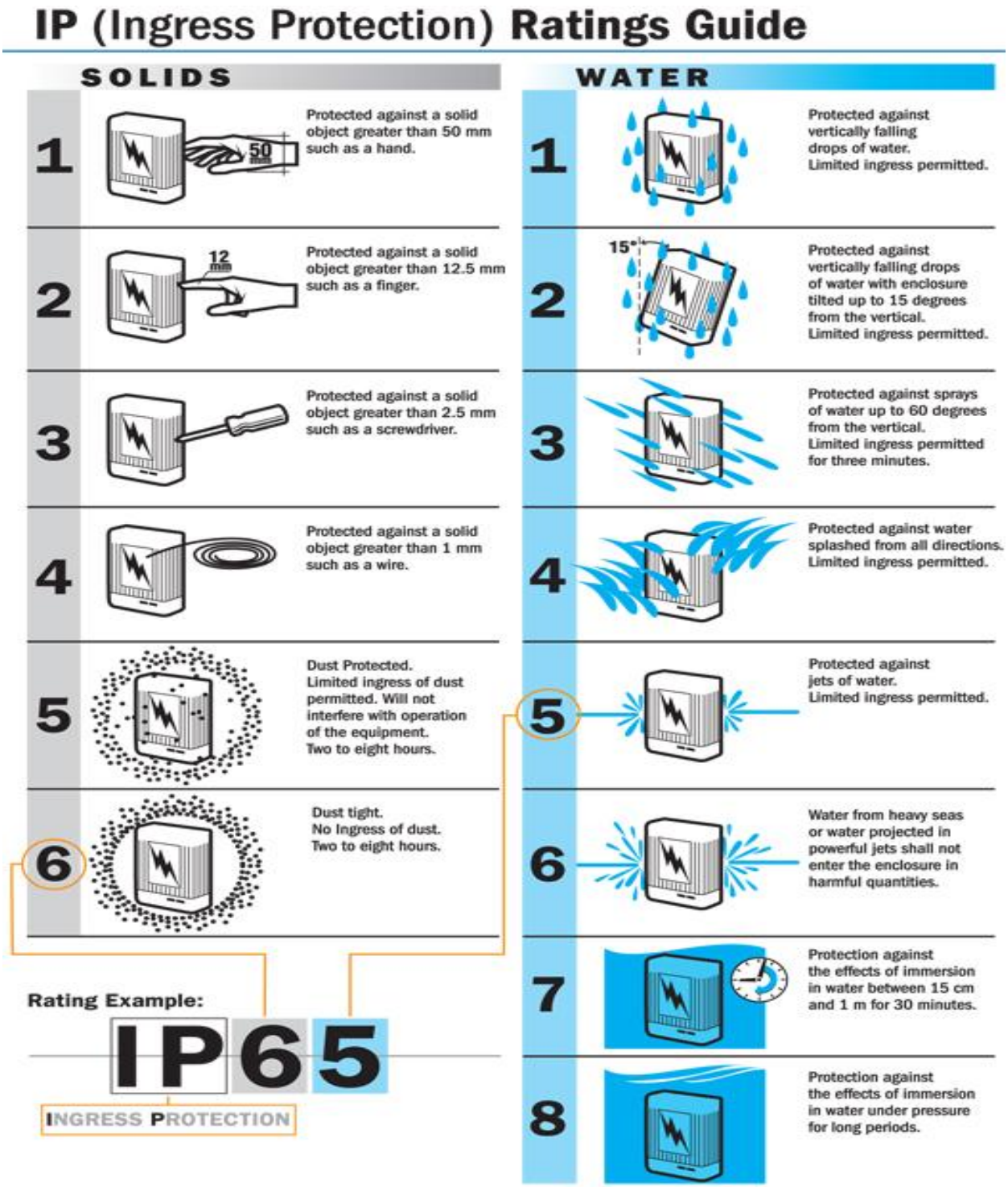

Image Credit: Blue Sea System

Overview of Technology

LEDs represent a unique type of light source where light is created from an electrical current passing across a semiconductor instead of a filament or arc chamber. Once the electrons in the semiconductor are excited, they move to a lower energy state. In the process, they release energy in the form of photons. The frequency of the emitted photons dictates the color of light produced by each LED. LED technology initially started out as an extremely inefficient method for generating light, but quickly gained traction in the R&D sector of the lighting industry and today is one of the most efficacious light sources available. For the last five years, advancements in LEDs have been moving so fast that their efficacy is improving at a rate of roughly 65% per year and show no sign of slowing down for the foreseeable future (Figure 2). Current LED luminaires can provide about 100 LPW, while as recently as 2006 they were only producing around 40 LPW. Many industry experts predict that we'll soon be seeing luminaires providing 120+ LPW.

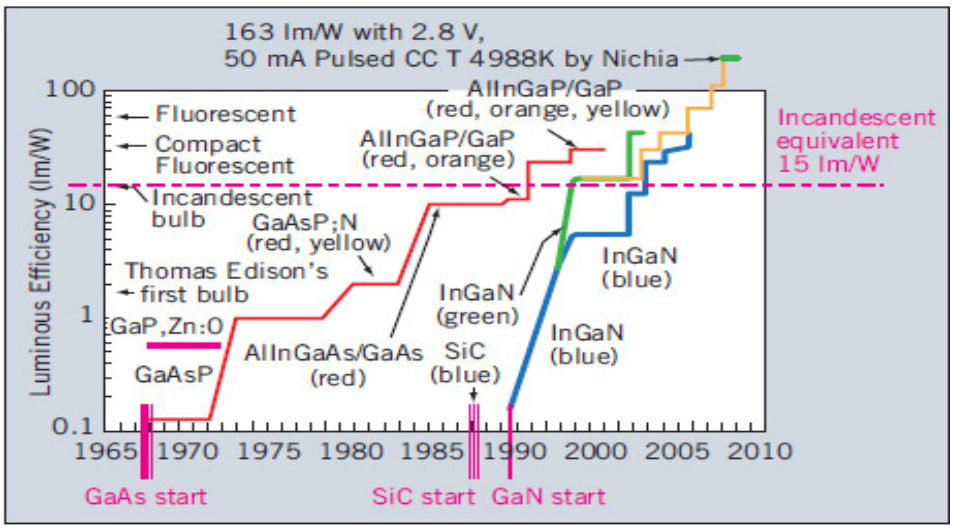

An induction lamp is an electrodeless light source in which a high-frequency generator and power coupler are used to create electromagnetic fields that excite mercury gas contained inside a vacuum-sealed glass tube. This is in contrast to typical lamps that utilize physical, electrical connections through the glass to transfer power. As in fluorescent lights, the excited mercury gas inside the tube emits UV radiation, which in turn is converted into visible light by the phosphor coating on the tube. Induction lighting got its start with Nikola Tesla in the 1890s but was not developed for widespread

Source: Alibaba.com

applications until the 1990s by many of the legacy lighting manufacturers. Current induction lighting technology can achieve luminous efficacies of 87 to 96 LPW. Very modest gains in efficacy are predicted for this technology and are not expected to keep pace with LEDs.

After examination of Table 2, it is easy to understand why HID technology has historically been such a popular choice for roadway lighting. However, it is important to consider the additional physics and characteristics of the light produced. Not only do HID lamps produce a very distinctive and unnatural glow (low CRI), they also yield hot pools of light that typically cause spillover well outside the roadway boundaries. In comparison, induction lights and LEDs offer extremely long lamp life and much improved CCTs.

Energy Efficiency

The main goal of efficient lighting technology is to provide the necessary illuminance on the target area with appropriate lighting quality using the lowest possible energy consumption. In this context, energy efficiency includes luminous efficacy of the lamp and appropriate power supply, optical efficiency of the luminaire, and effectiveness in delivering light to the target area without sending it to additional, superfluous areas. LED performance is extremely dependent on effective heat transfer and electrical design, which, if not engineered correctly, can lead to rapid decline in lumen output or premature failure. For this reason, it is absolutely crucial that LED photometry be backed up with an actual working product rather than theoretical predictions.

Optical precision is another factor determining the overall efficiency of roadway fixtures. It is important to examine the photometric reports and differentiate between the downward street-side (forward light) and downward house-side (backlight) lumens. For most roadway fixture applications, the higher the ratio of forward light to backlight the better. Another optical characteristic of the luminaire is the avg./min. uniformity ratio of its distribution. Induction and HID luminaires are near-point sources, which inherently cause the area directly below them to have a much higher illuminance than areas further away. Due to the smaller, directional, and multiple point source characteristics of LEDs, LED roadway lighting fixtures can provide vastly superior uniformity while avoiding “hot spots” (Figure 3).

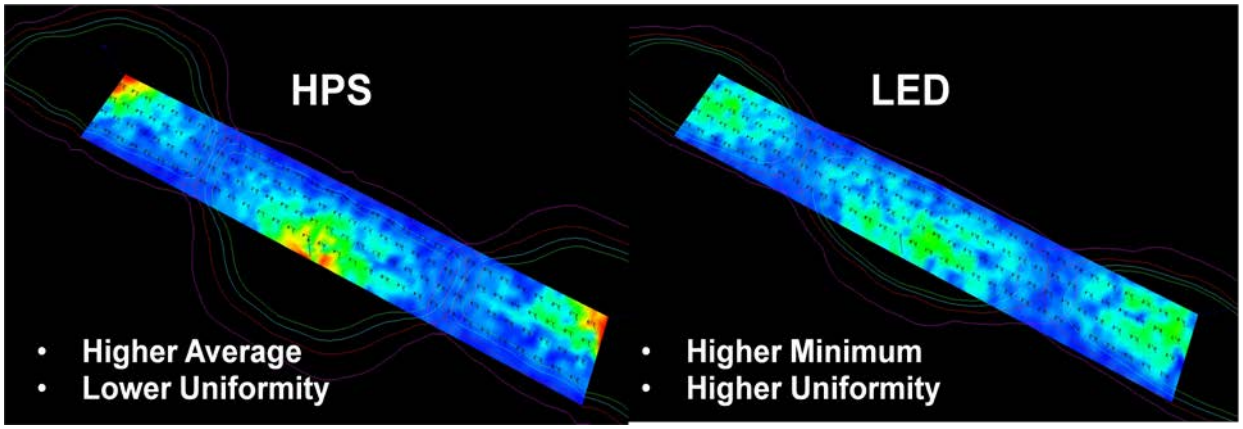

Figure 3: Graphic comparison of light output between comparable HPS and LED fixtures over a typical roadway surface. Source: Hubbell Lighting

Durability

Roadway lighting is subjected to all types of inclement weather and bird usage. As discussed earlier, LED performance is very sensitive to thermal performance, and the housing should therefore be designed so as not to retain dirt, water, or debris on either the top or the optical chamber. Manufacturers will provide IP ratings that describe the luminaire's resistance to dust and water penetration. High-quality, reliable gaskets and seals are absolutely crucial to providing a luminaire with long-term durability. Installation mishaps are inevitable, but the best way to minimize them is to utilize a luminaire with a quick disconnect between the light engine and the driver.

Color

Although the most efficient LEDs currently produce bluish-white light in the range of 4,500K to 6,500K, it appears that the industry has settled on ~4,000K as the standard CCT. When a very particular CCT is requested, manufacturers often mix the highest efficiency LEDs with warmer, less efficient LEDs to attain that target value. Induction lamps produce a warm, neutral light in the range of 3,500K to 5,000K. In terms of lighting quality, LED and induction luminaires have a much higher CRI than HPS lamps. CRI is a function of make, model, and CCT. It typically exceeds 70 for LEDs while HPS lamps attain low CRI values of around 21. It is important to note that true sunlight is 100 CRI. Although the IESNA's recommended practice for roadway lighting does not have a minimum CRI requirement, IESNA acknowledges that low CRI is a disadvantage because it reduces color contrast and drivers' ability to discern roadway and traffic features.

Lifetime and Lumen Maintenance

The reported useful life of mature roadway luminaires is often defined as the operating time in hours before catastrophic cathode failure. This is commonly called time-to-failure and for most HID lamps the time period prior to failure exhibits acceptable levels of light output, as shown in Figure 4. This makes it easy to determine when to replace the lamp. The lifetime range for HID luminaires is 10,000 to 30,000 hours, which is 2.3 to 7 years at 12 hours of operation per day.

Many LED and induction lighting manufacturers will specify the maximum current and temperature at which the lamps will produce more than 70% of initial lumens for the target lifetime; however, if the induction lamps and LEDs are operated at either lower current or temperature, usable lifetime may be substantially increased (see Figure 5). Well-designed induction lamps and LEDs typically depreciate slowly over time rather than completely fail, which may pose issues for maintenance crews attempting to identify when induction luminaires or LED arrays should be replaced.

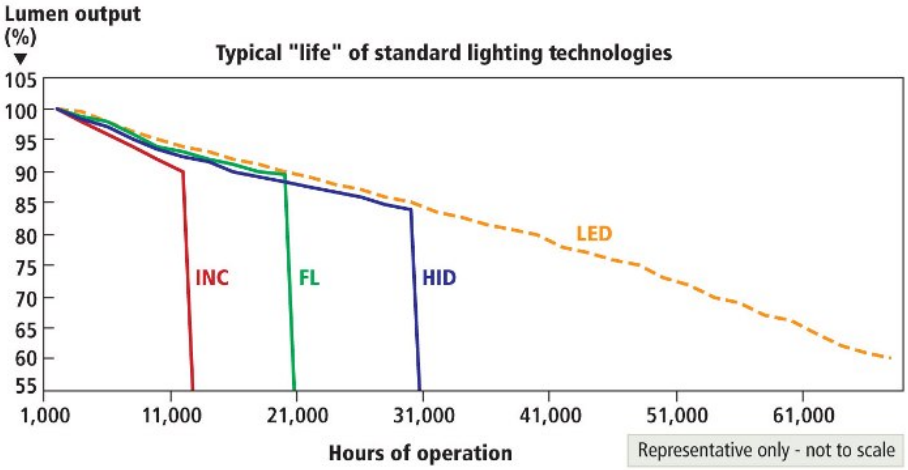

Figure 4: Lumen maintenance and failure behavior for incandescent (INC), fluorescent (FL), high-intensity discharge (HID), and LED lamps.[3]

Since extremely high temperatures can degrade and devastate the useful lifetime, thermal management is critical to long-term performance. Heat sinking and air flow must be designed to maintain an acceptable range of operating temperatures for the lamp and power supply. Operating temperature data from the manufacturer and how it is used in luminaire efficiency and lumen depreciation calculations for the specific fixtures being considered is crucial information and should be carefully examined. For an independent evaluation, the IES has published LM-80-08 "IES Approved Method for Measuring Lumen Maintenance of LED Light Sources" and TM-21-11 "Projecting Long Term Lumen Maintenance of LED Light Sources," which provide a standard method for projecting lumen maintenance based on testing data. The lighting community expects TM-21-11 to become the standard method used by organizations and program certifications for predicting useful life in realistic operating conditions as part of their required documentation of performance.

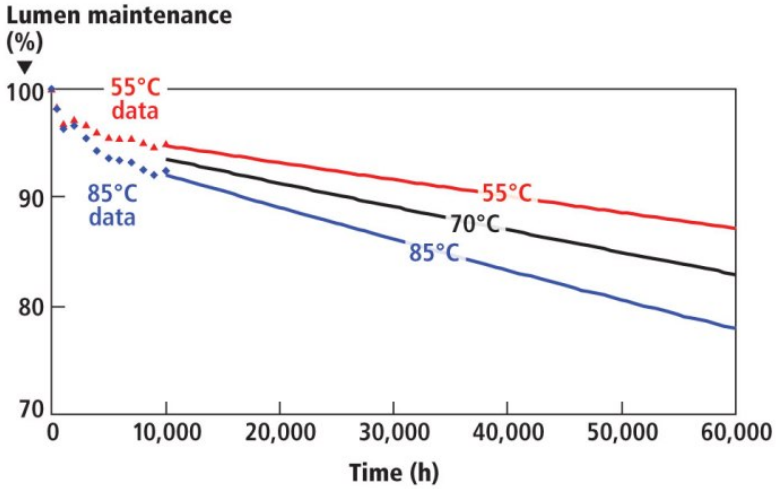

Figure 5: Lumen maintenance curves for lighting fixtures at various operating temperatures.[4]

[3] Richman, Eric. *The elusive "life" of LEDs: How TM-21 contributes to the solution.* LEDs Magazine. November 2011. Available at: <http://ledsmagazine.com/features/8/11/10/TM21fig1>

Visually Effective Lumens or "Pupil Lumens"

The human eye has two types of photoreceptors, cones and rods. Cones are commonly described to handle photopic (high light) vision and are most sensitive to red, blue, and green light in these conditions. Rods are normally described as handling our scotopic (low light) vision, are more sensitive to blue-green wavelengths, and primarily control the opening and closing of the pupil. It was widely believed that rods were only important for nighttime vision until recent studies performed by Dr. Sam Berman and Dr. Don Jewett at Lawrence Berkeley Laboratory showed that the perception of brightness is substantially influenced by the rods' functionality.

Describing light as "luminous flux" and measuring photopic illuminance on a target area have been the traditional ways of defining how much light is required on a work plane for a specific task. As such, light meters and recommended light levels have customarily been calibrated based on the photopic response. Due to studies such as those conducted by Berman and Jewett indicating that scotopic vision is more involved in lighting applications than previously thought, simply measuring the lumens proves to be not fully adequate in predicting how well people can see. An example of this issue is LPS technology, which produces a large quantity of lumens, but limits the eye's ability to make out details beyond shapes and objects.

Nearly every outdoor roadway lighting application falls within a range of light levels called the mesopic region, where both cones and rods affect the human visual system. Using "photopic lumens" to describe light intensity in such an area grossly underestimates the light intensity because it totally ignores the contribution of rod cells to vision. To account for this discrepancy, manufacturers began specifying the scotopic/photopic (S/P) ratio of lamps. Dr. Berman and Dr. Jewett developed a conversion factor that applies the P/S ratio to the rated lumen output of various sources to determine and express the total amount of visually effective lumens or "pupil lumens" under mesopic conditions.

$$Pupil\ Lumens = Photopic\ Lumens * S/P^{0.78} \quad (1)$$

Equation 1 was applied to the outputs of various lamps and tabulated in Table 3.

Table 3: Various Lamps with Applied Corresponding $(S/P)^{0.78}$ Correction Factor

Lamp	Watts	Photopic Lumens	Photopic Lumens/Watt	$(S/P)^{0.78}$ Correction Factor	Pupil Lumens	Pupil Lumens/Watt
LPS	250	32,500	130	0.2	9,250	37
HPS	365	37,000	101	0.62	25,530	70
MH	455	36,000	79	1.49	48,960	108
T8 Fluorescent (3000 K)	36	2,800	78	1.13	3,080	85
LED Light	15	1,500	90	1.9	2,475	165
5000 K Induction	80	6,400	92	1.62	10,368	130

[4] Richman, Eric. *The elusive "life" of LEDs: How TM-21 contributes to the solution.* LEDs Magazine. November 2011. Available at: <http://ledsmagazine.com/features/8/11/10/Tm21fig4>

It is prudent to avoid going by the published lumen output alone if planning to opt for induction or LED fixtures as replacements for existing HID roadway technology. Comparing absolute photopic lumens was fine as long as the same type of lamp was being compared. With differences in lighting technology, there is a marked shift in wavelength composition and CRI—and pupil lumens will become the standard comparison between technologies. Studies on the relevance of light spectrums and the mechanics of vision are ongoing, and codes and standards will reflect this in the near future.

Distribution and Glare

Each LED acts as a point source. Because of this characteristic, LED luminaires use different optics than HID and induction luminaires. This individual nature of LEDs allows for much more precise control of the light distribution and can result in less backlight and uplight, higher levels of vertical illuminance, higher luminaire efficiency, and more uniform distribution of light across the target area (see Figure 3 and Figure 6). In general, the greater the amount of forward light, the more light is being directed onto the roadway surface and objects in view of motorists.

When retrofitting existing LED roadway fixtures, do not evaluate illuminance alone since it does not consider the uncomfortable glare that reduces visibility for motorists. For example, while certain fixtures may provide the most uniform distribution pattern with the least overall energy consumption, the very high angles (80° to 90°) of light necessary to accomplish this are often the same angles that create disability glare. Instead, follow the IESNA recommendations for the type of roadway being scrutinized.[5] Polar plots (similar to the ones shown in Figure 7) are provided by manufacturers to depict the pattern of light emitted from their fixtures. Figure 8 illustrates the forward, back, and upward lighting angles referenced in the Luminaire Classification System (LCS) developed by the IESNA. In general, look for:

- Reduction in luminous intensity in the 80° to 90° vertical angles to avoid glare and overspill
- Near zero intensity emitted between 90° and 180° (the angles which contribute to light pollution)
- Near zero intensity emitted behind the fixture unless it is being designed for applications with pedestrian walkways or situations involving back-to-back mounting along the center of the roadway

[5] Illuminating Engineering Society of North America. *American National Standard Practice for Roadway Lighting, ANSI / IESNA RP-8-00.* New York: 2000. Print.

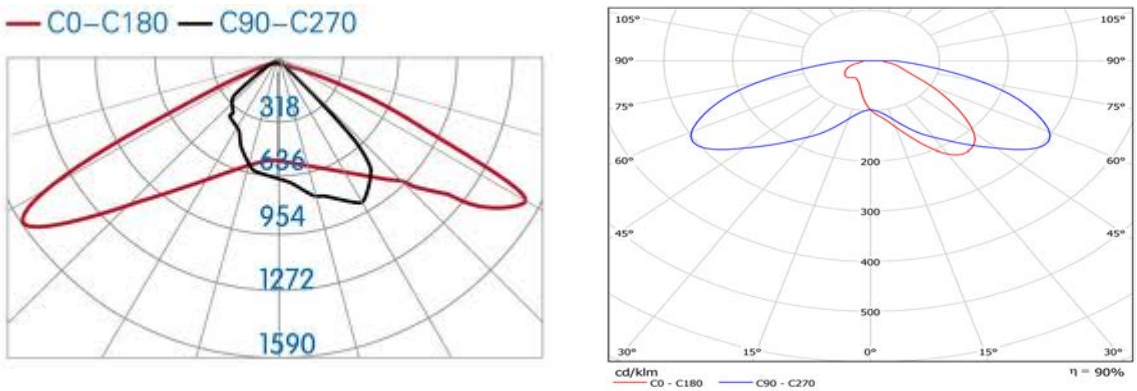

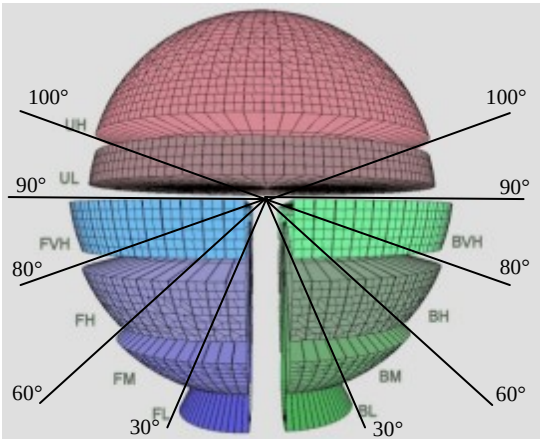

Figure 8: Luminaire Classification System (LCS developed by IESNA which divides the sphere of light emitted by a luminaire into three main zones (up, forward down, and back down) with further subdivisions. Up High (UH) covers 100°-180°, Up Low (UL) covers 90°-100°, Front Very High and Back Very High (FVH and BVH) cover 80°-90°, Front High and Back High (FH and BH) cover 60°-80°, Front Medium and Back Medium (FM and BM) cover 30°-60°, and Front Low and Back Low (FL and BL) cover 0°-30°. Credit: Illinois Coalition for Responsible Outdoor Lighting

Potential Barriers

Warranties and Technological Advancement

LED roadway lighting fixtures, like most consumer products, come with warranties that guarantee acceptable performance for a certain time period. Unlike most consumer products, LED technology is advancing at such a fast rate that completely new product lines are being developed before the end of the warranty period and well before the end of useful life. Acceptable warranties for LED roadway luminaires currently run from three to five years. Should an LED fixture component break, fail, or need replacement within this span, it may already have become obsolete and the advantageous 15 to 20 year lifetime will be rendered worthless. It is therefore imperative that certain issues be addressed in manufacturers' warranties if LED roadway lighting technology is to develop widespread implementation.

The most significant warranty issue that must be addressed is technological obsolescence. As previously mentioned, LED technology is advancing at a pace that can render three- to five-year-old components obsolete. If a completely new product line is developed in that time span, replacement parts may not be widely available for previous products because distributors try to keep pace with current technology. For example, if a single LED array/bar within a roadway fixture fails after three years, the manufacturer probably will have greatly increased the efficacy of its LEDs. Installing a replacement array/bar would result in a significant and undesirable drop in footcandle uniformity (and thus an increase in the uniformity ratio). This forces the customer to either purchase multiple "spare" fixtures with the initial order or purchase completely new fixtures well before the end of useful life has been reached. To eliminate this issue, manufacturers' warranties should guarantee the long-term availability of comparable (efficacy, CRI, isofootcandle distribution, etc.) replacement parts.

Power Supply Performance and Lifetime

The expected lifetime and performance of the power supply for LED luminaires is the second major issue perceived as a potential barrier to widespread LED roadway luminaire implementation. Arguably the largest advantage of switching from HID technology to LED technology is the increased lifetime of the luminaires and the corresponding decrease in maintenance. This benefit however, can be negated to a large degree if the driver performs poorly and must be replaced multiple times throughout the luminaire's lifetime. Should numerous replacements be needed, the LCC of the LED fixture would dramatically increase and potentially render the retrofit cost-ineffective. Some manufacturers are beginning to address this issue with major design improvements that virtually eliminate performance concerns resulting from high operating temperatures. First, they are completely sealing the LED and driver circuits to prevent the accumulation of dust and foreign material on electronic componentry. Second, is the isolation of the driver from the LEDs in order to provide separate heat sinks for each component. Lastly, they are building their integrated circuit (IC) boards with metallic backings that allow heat to escape more effectively and improve performance. Until these improvements catch on with the rest of the industry, short driver lifetime and poor performance could hinder major penetration in the roadway lighting market.

Efficacious Plateau of Induction Lighting

Many legacy lighting manufacturers began to focus on developing commercially viable induction lighting in the 1990s. As a result, the mechanics and physics of how induction lights operate are thoroughly understood. While it was only recently that this technology was put to use for roadway applications, the efficacies achieved by these lamps appear to be plateauing at around 90 to 95 LPW. This is comparable to existing HPS and LPS technology but soon may be 25% below that of LEDs. They also are reaching the limitations on how effectively light can be delivered to the target area since induction lamps cannot be focused like multiple point sources. This lack of exciting and considerable advancements on the horizon is perceived to be a major barrier for widespread implementation of induction technology in the roadway lighting industry.

ADAPTIVE LIGHTING CONTROLS

With the arrival of high performance roadway LED and induction luminaires, the control system has suddenly become a much more important component of the overall roadway lighting system. The term "adaptive lighting" is now widely used to define the concept of providing light management to individual luminaires, groups of luminaires, or whole systems of luminaires throughout the infrastructure—allowing the dimming of roadway lights to match specific requirements of locations at different times of night. Various adaptive control systems offer a range of possibilities and complexities based on applications and needs. Some available features in today's control systems include dimming (timers and photocells), light on demand/motion detectors, constant light output, energy consumption and metering, end-of-life signaling, failure monitoring, diagnostics, and operational efficiency. Some systems are luminaire based while others require local communication or mesh networks.

The main purpose of adaptive roadway lighting control is to save energy without negatively affecting vehicular safety or flow. These systems can provide a programmable two-way process that also gathers information regarding energy consumption and maintenance requirements. In addition to the energy-saving advantages, having the ability to adjust light levels can also reduce light pollution, while monitoring lamp failure can contribute to savings in maintenance and to increased safety.

To validate the appropriateness of adjusting lighting levels, it must first be explained how roadway light levels have historically have been determined. In the United States, roadway lighting levels are established by the IESNA by examining the type of roadway and the level of pedestrian conflict. The higher the potential for vehicular and pedestrian conflict, the higher the level of lighting recommended. The highest pedestrian conflict level for an area or segment of roadway is used to establish the minimum lighting levels for the portion of roadway under consideration. Traditionally, once this minimum level is established, roadway lights have continuously provided that level of lighting throughout the night.[6] However, pedestrian conflict levels do not usually remain constant throughout the night. In most cases, the number of pedestrians present in a given area is significantly less during the late night and early morning hours. Pedestrian activity is also dependent upon day of the week, season, and other predictable dynamics. During hours of reduced pedestrian activity, the level of lighting provided could be decreased while still meeting IESNA-recommended criteria for the actual level of pedestrian conflict. To date, there are no internationally accepted guidelines concerning adaptive adjustment of light levels in roadway lighting.

Today's manufacturers offer adaptive roadway lighting control systems that range from simple to very complex. They all consist of remote terminal units and light control units while the more complex systems contain an additional control center (computer with interfacing software). Control centers monitor and record the luminaire operation—making decisions according to control parameters. Remote terminal units collect luminaire information from light control units, send that information to a control center, and transmit the predefined operation parameters to the light control units. Light control units (timers, photocells, and motion sensors) execute the operational commands and transmit the performance

[6] McLean, Dan. "Adaptive Roadway Lighting." *IMSA Journal*. Accessed 25 Jul. 2012. Available at: <http://www.imsasafety.org/journal/so06/18.pdf>

information to the remote terminal unit.[7] With the more complex systems, there is the opportunity to identify lamp outages and schedule optimized maintenance routes through the use of mapping software.

Timers

Time-schedule-based control systems allow roadway lighting levels to be adjusted based on specific times of the day and night. They are currently the most economic and reliable solution for roadway lighting control systems. Timers do not adapt to ambient conditions—they simply provide predetermined light outputs according to a sunrise/sunset schedule and therefore cannot respond to weather conditions or un-scheduled events. This aspect is their most glaring disadvantage and the main reason why they are not more widely implemented.

Photocells/Photoreceptors

Photocells offer the ability to gradually or instantly turn roadway fixtures on and off depending on ambient light levels. This is mainly in response to sunrise and sunset, but can also be triggered by severe weather events and unusual phenomena. Their adaptability to ambient light levels is their largest advantage. The most prominent disadvantage this technology faces is reliability. If the photoreceptor is covered with dirt or debris, the lamps may come on prematurely or even stay on continuously—thus eliminating their energy savings and drastically cutting down on expected lifetime.

Occupancy/Motion Sensors

Motion sensor controls can identify advancing vehicles and/or pedestrians and instruct roadway fixtures to provide appropriate illuminance levels as they approach. The main idea behind motion sensors for roadway lighting is to provide additional energy savings by dimming the lamps when they are not being used during periods of low-level traffic/activity. Motion sensors may be placed several fixtures away from the actual fixture they are triggering in order to provide preemptive illuminance since vehicles usually travel at considerable speeds.

RETROFITTING VS. NEW FIXTURES

At first glance, retrofitting new roadway lighting technology into existing housings would appear to be easier and less expensive than converting to completely new fixtures. It also would significantly cut down on the amount of discarded material. However, installing induction or LED roadway lighting technology into existing housings can create a serious liability issue and result in removal of the fixture's UL rating. This eliminates manufacturer warranties and places liability for any and all accidents upon city management, municipal utilities, public works departments, and maintenance crews.

LEDs also utilize vastly different optical control and thermal performance design than HID lamps. A retrofit could eliminate the drastic cutoff that is so distinctive and advantageous for LED roadway luminaires and decrease the ability to provide proper thermal management to the LED. If a low junction

[7] Guo, Liping. "Intelligent Road Lighting Control Systems - Experiences, Measurements, and Lighting Control Strategies." Diss. Helsinki University of Technology, 2008. Web. <http://lib.tkk.fi/Diss/2008/isbn9789512296200/isbn9789512296200.pdf>

temperature cannot be maintained within the LED, performance quickly decreases and lumen maintenance drastically worsens. It is highly recommended that completely new fixtures be installed rather than retrofitted when switching from existing HID technology to induction or LED technology.

LEASING FROM INVESTOR OWNED UTILITIES (IOUs)

The majority of municipal utilities and public works departments in Minnesota lease their roadway lighting equipment (lamps, luminaires, poles, etc.) from investor owned utilities (IOUs) rather than owning and maintaining all of their roadway luminaires outright. They frequently pay the IOUs to provide varying degrees of installation, maintenance, and replacement services. These types of agreements have come about because the initial investment that accompanies roadway lighting equipment often poses a prohibitively high upfront cost. Municipal utilities often do not have the financial resources to even consider making such a large purchase.

IOUs recognized the potential for providing municipal utilities with additional options and developed rate structures for various scenarios of equipment ownership, installation and maintenance accountability, lamp replacement, and energy consumption. The three main types of rate codes are as follows:

> Rate 1: IOU installs, owns, operates, and provides normal maintenance to all roadway lighting equipment, while customer pays a monthly rate per luminaire.
>
> Rate 2: IOU provides installation and maintenance services, while customer assumes ownership of all roadway lighting equipment and pays a monthly rate per luminaire.
>
> Rate 3: IOU provides energy services, while customer owns, installs, and maintains all roadway lighting equipment. Customer pays $/kWh energy charge and sometimes a monthly rate per meter.

Each IOU has its own set of rate codes describing which types of roadway lighting systems apply, which sizes and types of luminaires are eligible, the monthly rate for each eligible luminaire, energy charges per kWh, and all applicable riders, adjustments, and taxes. The resulting bill and complete set of charges can be quite overwhelming. This may serve as another barrier to widespread implementation of LED and induction roadway lighting technology.

DEMAND-SIDE MANAGEMENT OPPORTUNITIES

Demand-side management (DSM) programs are playing an increasingly significant role as utilities look for ways to decrease energy consumption and lower generation costs. Managers of these programs often attempt to modify consumer demand through education and financial incentives. Adjusting consumer demand can be tricky and time consuming since extensive research and creative approaches are frequently required.

Replacing HID roadway luminaires with LED or induction roadway lighting technology can provide managers of DSM programs with a significant opportunity for decreasing demand-side energy

consumption. Whether the utility or the customer owns the roadway lighting equipment, switching from HID to induction or LED luminaires will often provide 40% to 60% savings in electricity consumption. For a Minnesota city of 23,000 people, this can correspond to a reduction of roughly 700,000 kWh annually. It can help DSM program managers achieve their annual demand reduction goals without having to modify consumer demand. This approach can also help the utility attain lower life-cycle costs for its roadway luminaire leasing program, which can be passed on to the consumer in the form of lower monthly rates. This allows the leasing program to remain extremely competitive and discourages current customers from leaving or switching.

CIP Considerations

Research in the following sections of this report indicate that a utility-led pilot program is warranted before LED roadway lighting can be effectively incorporated into conservation improvement programs (CIPs). This is recommended because several important steps must be undertaken before a full-fledged program can be successfully implemented. The first step is to standardize a set of LED luminaires for roadway applications under utility-owned rate codes. Since LED luminaires are very application specific, the selection process for each individual project has the potential to become very time consuming. Standardizing an LED luminaire for each type of roadway application would eliminate this time-intensive selection process.

The second step is to select criteria for qualifying products under customer-owned rate codes. These criteria may include a five-year warranty, meeting IESNA RP-8-00 illuminance recommendations, a minimum BUG rating, and a minimum IP rating. This step should naturally and easily come about following the previous step's selection of standardized products. The third step is determining the extent to which LED roadway luminaires could be expected to decrease the off-peak load. The fourth and final step is the formation of rate codes and the calculation of rates for various combinations of utility- and customer-owned LED roadway luminaires. Completion of the previously mentioned steps and compilation of information on each luminaire's total life cycle cost would make the final step much easier.

ECONOMIC ANALYSIS: CHANHASSEN CASE STUDY

A case study was conducted in the City of Chanhassen, Minn., as part of this project. It included an economic analysis of the simple payback period (SPP), net present worth (NPW), and life-cycle cost (LCC) of replacing HID roadway lighting systems in rate codes similar to Rate 1 or Rate 2 with LED roadway lighting systems in a rate code similar to Rate 3 (see Table 4). This economic analysis provides municipal-scale roadway lighting decision makers with a conservative, yet realistic, estimate for assessing the cost-effectiveness of this change. While the up-front cost for a new system of LED roadway luminaires may initially seem too expensive for full-scale implementation, the low power draw and extended lifetime of LED luminaires yield substantial energy and maintenance savings. This makes them an attractive alternative when employing a long-term perspective.

Levelized Cost of Energy and Services

The levelized cost of energy and services (LCOES) is a $/kWh rate that incorporates the energy charge as well as all applicable riders, adjustments, and taxes that are billed by the IOU to the customer. According to energy bills obtained from Chanhassen's public works department, the LCOES varies depending upon the rate structure being applied. The LCOES for Rate 1 is $0.169/kWh and for Rate 2 is $0.064/kWh.

The levelized cost of service (LCOS) is similar to LCOES but without the energy charge. It is a $/kWh rate that incorporates all applicable riders, adjustments, and taxes. This differentiation was necessary for Rate 3 because the energy charge is explicitly determined in the rate code. The LCOS for Rate 3 is $0.034/kWh.

Energy Charge

According to the rate code for Chanhassen's HID roadway lights, the energy charge for Rate 3 is $0.04589/kWh.

Luminaire Lifetime

The analysis period for evaluating cost-effectiveness was selected by taking the average expected practical lifetimes of the HPS and LED luminaires used in the demonstration. From Chanhassen's experience, HPS lamps need to be replaced roughly every 21,000 hours of operation. According to manufacturer claims for LED luminaires used in this demonstration, the average expected L_{70} lifetime was approximately 150,000 hours of operation. Not only is this value a very far out projection of results from ongoing laboratory testing, but, as discussed earlier, dirt depreciation, high heat, and inadequate current settings can shorten this time significantly. With these factors in mind, a much more conservative and practical operating L_{70} lifetime of 78,000 hours was used. Corresponding analysis periods of six years and 22 years were therefore used for the HPS lamps and LED fixtures respectively—obtained by dividing the expected useful lifetimes by an annual operating time of 3,550 hours.

Initial Purchase Costs

Initial LED luminaire purchase pricing was obtained from manufacturers' representatives in the Twin Cities area. Pricing was affected by efficacy, order quantity, and length of supply chain—all of which complicate the comparison of prices between multiple applications. One to two samples of 10 different LED roadway luminaires were ordered for this study, and pricing for quantities of 500 were obtained. Prices ranged from $250 to $1,325 per luminaire. Since each luminaire was different, the pricing was normalized per Watt consumed to yield a comparative rate for the purchase cost of a new LED luminaire. The lowest normalized purchase cost was $3.10/W, the average was $5.50/W, and the highest was $15.80/W. Due to the myriad of factors affecting pricing, customers should expect final prices to vary considerably within the range of values obtained here.

According to Chanhassen's public works department, a new 250W HPS replacement lamp costs just under $11. It also estimated the purchase price of a new pole at $800/pole.

Installation and Maintenance Costs

It was determined that the average installation cost of a 250W HPS lamp or equivalent LED luminaire was $110, including personnel hours and equipment use. New pole installation costs were estimated at $1,500/pole.

Chanhassen's public works department does not conduct annual scheduled maintenance on its HID roadway luminaires. If it did, the economic analysis presented in Table 4 would be slightly more attractive for LED replacement since LED roadway technology generally requires less frequent maintenance. Costs associated with pole maintenance were not included in annual maintenance costs because they should be the same regardless of roadway lighting technology.

Discount Rate and Uniform Series Present Worth (USPW)

The discount rate is an economic rate at which a project site discounts future expenditures to establish their present value. Discount rates of 2%, 4%, and 8% were used in this analysis.

The uniform series present worth (USPW) is a value that represents the equivalent length of time over which an annual uniform series of costs must be calculated to provide their total present value. It can be calculated using Equation 2 below, where P is the present value, A is the annual cost, d is the discount rate, and N is the number of years for the analysis period:

$$USPW = \frac{P}{A} = \frac{[1-(1+d)^{-N}]}{d} \qquad (2)$$

A time period of N = 22 years was used, which is the average expected lifetime of the LED luminaires.

Rebates

The availability of rebates for energy-efficient roadway lighting projects depends on the electricity provider. While many offer custom rebates on a $/kWh savings basis, it cannot be assumed that rebates will be available for each project. Therefore it is important to contact the local electricity provider and determine whether rebates exist for energy-efficient roadway lighting projects.

Summary of Assumptions

1. Operating time between ½ hour after sunset and ½ hour before sunrise ≈ 3,550 hrs/yr.
2. Average lifetime of HPS lamps ≈ 21,000 hours.
3. Average practical lifetime of LED luminaires ≈ 78,000 hours.
4. Average lifetime of poles ≈ 30 years.
5. Analysis period ≈ 22 years.
6. Purchase cost of LED luminaires ≈ $5.50/W
7. Replacement cost of 250W HPS lamp ≈ $11
8. Cost of new pole ≈ $800
9. Luminaire/lamp installation cost ≈ $110
10. New pole installation cost ≈ $1,500
11. Each LED luminaire requires two hours of service over a 22 year lifetime ≈ $200.
12. All HID roadway fixtures are replaced by LED fixtures that consume 40% as much power.
13. No rebates apply (for conservative analysis).

Table 4: SPP, NPW, and LCC of LED Luminaires for Different Rate Code Adjustments at Various Discount Rates

HID Rate Code:	HID Rate 1 → LED Rate 3	HID Rate 2 → LED Rate 3	HID Rate 3 → LED Rate 3	Overall
Type of HID Luminaire	100W HPS, Underground	250W HPS, Ornamental	250W HPS, Underground	
Power Consumption w/Ballast (W)	116	300	300	
Quantity	600	300	250	
Lamp Purchase Cost	N.A.	$10.94	$10.94	
Lamp Installation Cost	N.A.	N.A.	$110	
Expected Lamp Lifetime (hours)	N.A.	21,000	21,000	
Meters	N.A.	N.A.	15	
Electricity Rate ($/kWh)	N.A.	N.A.	$0.04589	
Monthly Leasing Rate ($/luminaire)	$17.02	$4.80	N.A.	
Monthly Meter Charge ($/meter)	N.A.	N.A.	$8.65	
LCOES ($/kWh)	$0.169	$0.064	N.A.	
LCOS ($/kWh)	N.A.	N.A.	$0.034	
Annual Cost to Customer	$164,301	$38,283	$27,939	$230,522
LED Rate 3:				
Type of LED Luminaire	LED, Underground	LED, Ornamental	LED, Underground	
Power Consumption (W)	46.4	120	120	
Quantity	600	300	250	
Luminaire Purchase Cost	$255	$660	$660	
Luminaire Installation Cost	$110	$110	$110	
Pole Purchase and Installation Cost	$2,300	N.A.	N.A.	
Expected LED Lifetime (hours)	78,000	78,000	78,000	
Electricity Rate ($/kWh)	$0.04589	$0.04589	$0.04589	
LCOS ($/kWh)	$0.034	$0.034	$0.034	
Rebate ($/kWh reduction/fixture)	$0.00000	$0.00000	$0.00000	
Annual Cost to Customer	$13,357	$12,941	$12,341	$38,639
Initial Cost to Customer	$1,229,824	$231,000	$192,500	$1,653,324
SPP, NPW, and LCC:				
Discount Rate	2.0%	2.0%	2.0%	2.0%
USPW	17.6	17.6	17.6	17.6
Simple Payback Period (years)	**8.1**	**9.1**	**12.3**	**8.6**
Net Present Worth	**$1,432,816**	**$216,035**	**$82,648**	**$1,731,498**
HID Luminaires Life Cycle Cost	**$2,898,262**	**$675,309**	**$492,842**	**$4,066,412**
LED Luminaires Life Cycle Cost	**$1,465,446**	**$459,274**	**$410,194**	**$2,334,914**
SPP, NPW, and LCC:				
Discount Rate	4.0%	4.0%	4.0%	4.0%
USPW	14.4	14.4	14.4	14.4
Simple Payback Period (years)	**8.1**	**9.1**	**12.3**	**8.6**
Net Present Worth	**$949,715**	**$134,926**	**$32,726**	**$1,117,366**
HID Luminaires Life Cycle Cost	**$2,372,410**	**$552,783**	**$403,422**	**$3,328,615**
LED Luminaires Life Cycle Cost	**$1,422,695**	**$417,857**	**$370,696**	**$2,211,248**
SPP, NPW, and LCC:				
Discount Rate	8.0%	8.0%	8.0%	8.0%
USPW	10.2	10.2	10.2	10.2
Simple Payback Period (years)	**8.1**	**9.1**	**12.3**	**8.6**
Net Present Worth	**$309,156**	**$27,382**	**-$33,467**	**$303,071**
HID Luminaires Life Cycle Cost	**$1,675,168**	**$390,322**	**$284,858**	**$2,350,348**
LED Luminaires Life Cycle Cost	**$1,366,011**	**$362,940**	**$318,325**	**$2,047,277**

Discussion of Results

An examination of Table 4 results in the conclusion that a complete retrofit of all existing HPS roadway lighting to Rate 3 LED roadway lighting can be economically attractive for an organization currently leasing roadway luminaires from an IOU—and can greatly improve with the addition of rebates. It also is important to note that the economic attractiveness is inversely correlated with the discount rate—as the discount rate increases, the cost-effectiveness decreases.

When this analysis is broken down into separate rate adjustments, it becomes clear that one is significantly more cost-effective than the other two. The most economically attractive of the three scenarios presented in Table 4 is switching from Rate 1 HPS luminaires to Rate 3 LED luminaires. At a discount rate of 4%, this scenario provides an 8.1 year SPP and nearly $950,000 NPW over 22 years. The least cost-effective of the rate adjustments in Table 4 is switching from Rate 3 HPS luminaires to Rate 3 LED luminaires. At a discount rate of 4%, this scenario yields a 12.3 year SPP and $33,000 NPW over 22 years. It is worth noting that this last scenario is highly dependent upon the power consumption of the LED luminaires.

Since LED roadway luminaires were applied to Rate 3 for all three scenarios, the substantial differences in SPP were principally due to the widely varying annual customer cost per HPS luminaire. For Rate 1, Rate 2, and Rate 3, the annual customer cost per HPS luminaire was $274, $128, and $112, respectively. Discount rate and energy consumption also had a significant impact on cost-effectiveness; however their effect was uniform across all three rate adjustments.

If a municipal utility is interested in replacing an entire HID roadway lighting system with LED roadway lighting technology, it can expect a payback of approximately 7 to 10 years without rebates—and several years quicker with rebates. Due to the myriad of factors affecting final costs (and simplified in Table 4), customers should be prepared for SPPs, NPWs, and LCCs to vary considerably from the range of values obtained here.

In-Depth Analysis

In addition to the simplified economic analysis presented in Table 4, a much more detailed analysis was completed using actual roadway luminaire counts, costs, and rate codes obtained from the City of Chanhassen. This case study of a potential full system retrofit is meant to provide an additional and in-depth resource for those interested in the finer details of examining the economic feasibility of undertaking such a project. The complete set of assumptions, calculations, and results for this case study with the City of Chanhassen are presented in Appendix B. At a discount rate of 4%, analysis period of 22 years, and without any rebates, the project's overall SPP and NPW were 10.1 years and $1,220,000, respectively.

PILOT DEMONSTRATION OF LED ROADWAY LUMINAIRES

This section documents a pilot demonstration of LED roadway lighting technology along Coulter Boulevard in Chanhassen, Minn., in which LED luminaires were substituted for incumbent HPS luminaires and evaluated for light quality, distribution, and performance.

Site Description

Coulter Blvd. is a winding two-lane, 1.5 mile local road that runs east to west and parallel to MN 5 through Chanhassen, Minn. The road passes through a mix of rural, residential, and commercial areas and has a 30mph posted speed limit. A sidewalk runs the length of the road and provides an intermediate pedestrian conflict. The existing 250W HPS luminaires are mounted 25.5 ft. above finished grade and are primarily spaced 138 ft. apart in a staggered manner. For approximately 0.4 miles at the west end of Coulter Blvd., the poles switch exclusively to the south side of the road with 300-ft. spacing.

Preliminary characteristics of Coulter Blvd. were assessed to help properly size the replacement LED luminaires. Roadway layout, classifications, and pole specifications were all considered in originally estimating the luminaire output needed to match IESNA recommendations for maintained illumination and uniformity ratios. IP ratings and light color characteristics were also examined.

Figure 9: Google Earth image of Coulter Blvd. The dashed orange lines trace the contour of the road, while the red circles identify the specific installation locations. Image Credit: Google Earth

Figure 10: Street views of Coulter Blvd. with existing 250W HPS shoebox-style luminaires

Existing Luminaires

Chanhassen currently uses 250W HPS shoebox-style luminaires from Spaulding Lighting (a Hubbell Lighting brand) with the catalog product number RCS – HP250S – 3PA – 1 – NPS (see Figure 11). It is part of Spaulding's Raven series and produces a CCT of 2,100 and CRI of 22. This luminaire draws 302W, initially produces 31,250 lm, has a 104 LPW efficacy, and has a Type II distribution. Chanhassen has had to replace these fixtures roughly every 21,000 hours of operation. Datasheets specify that the luminaire has an IP55 rating and a BUG rating of B3-U0-G3.

Figure 11: Incumbent 250W HPS roadway luminaire

New Luminaires

Ten models of LED roadway luminaires from seven different manufacturers were chosen for this pilot demonstration. Sixteen luminaires in total were installed—four in the in-line orientation with 300-ft spacing at the west end of Coulter Blvd., and 12 in the staggered orientation with 138-ft spacing at the east end of Coulter Blvd. Luminaires were installed in the in-line orientation from west to east in the following order: one American Electric Lighting ATB0 20A luminaire, one CREE XSP1 luminaire, one Cooper NAVION 03 SL2 luminaire, and one Toshiba TGT luminaire. The remaining luminaires were installed from west to east in the staggered orientation in the following order: two American Electric Lighting ATB0 30B luminaires, two CREE XSP2 luminaires, two Cooper NAVION 02 SL3 luminaires, two GE ERS2 luminaires, two Hubbell Cimarron CL1A30LU5K2DB luminaires, and two SDL 25F-LE3-84L luminaires.

American Electric Lighting ATB0 20A Luminaire

This luminaire provided by American Electric Lighting (AEL) had the catalog number ATB0 20ALED E70 MVOLT R2 SH. It is part of AEL's Autobahn Series and contains a 20 LED array with a CCT of 4000K and a CRI of 70+. The 20A luminaire (see Figure 12) draws 51W, initially produces 3,932 lm, has a rated 77 LPW efficacy, and has a Type II distribution (see Figure 13). AEL claims a rated L_{70} lifetime of >100,000 hours for the LED light engines and 100,000 hours for the electronic driver—with an operating ambient temperature range of -40°C to 40°C (-40°F to 104°F). The datasheets also specify that the luminaire has an IP66 rating and a BUG rating of B1-U0-G2.

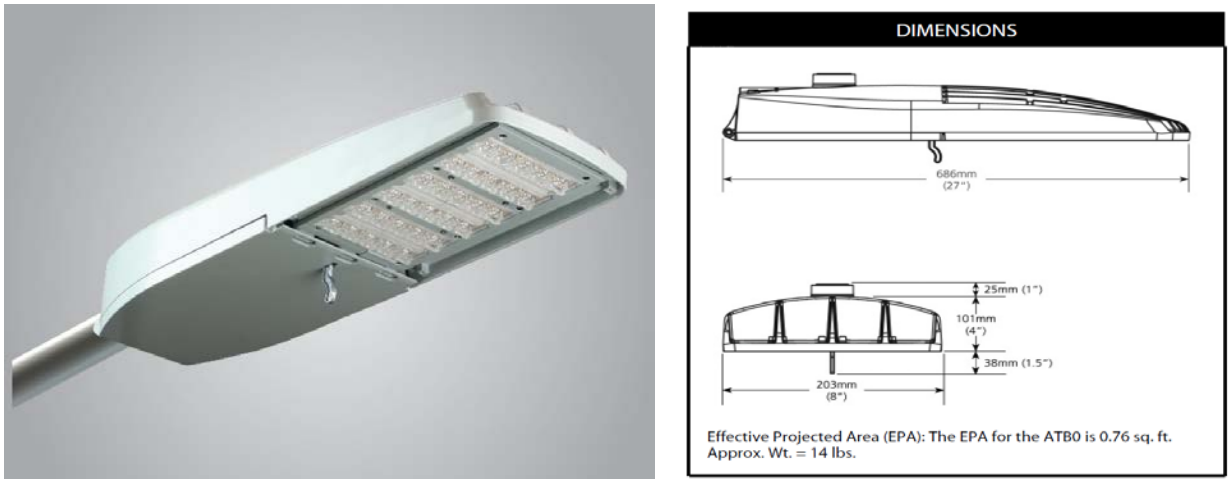

Figure 12: Appearance and dimensions of the AEL Autobahn Series ATB0 luminaire

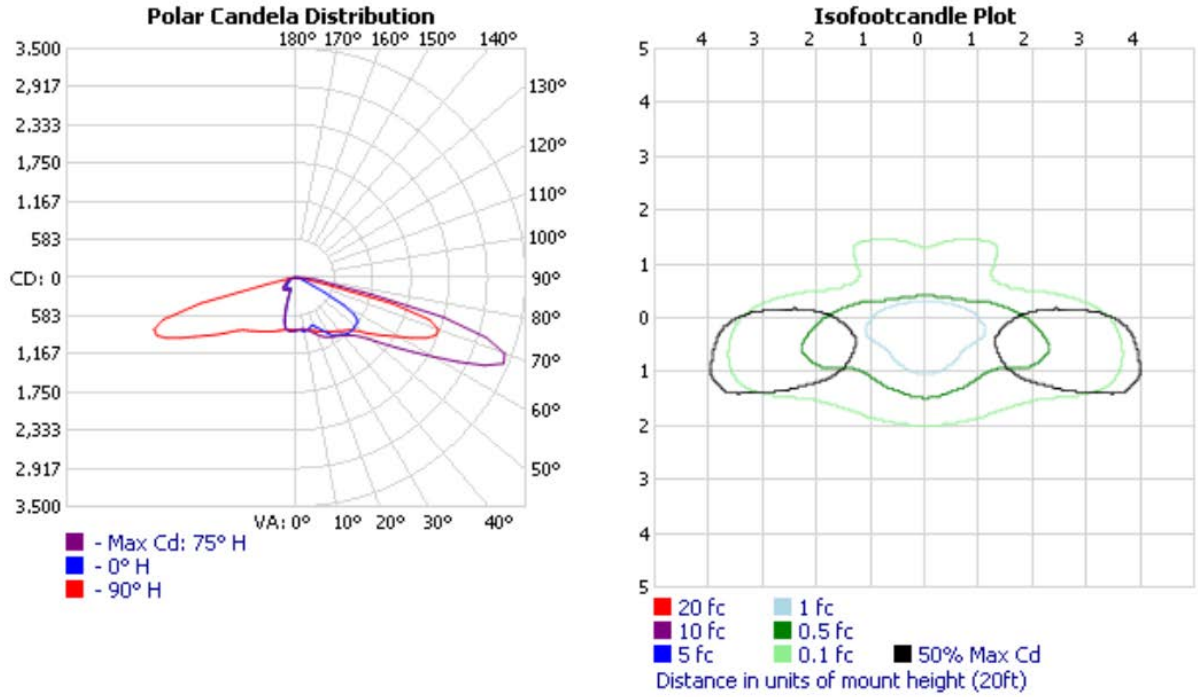

Figure 13: Photometric report for AEL's 20A luminaire

CREE XSP1 Luminaire

This luminaire provided by CREE had the catalog number BXSPAO2AA-US. It is part of CREE's XSP Series and contains a five LED array with a CCT of 5700K and a CRI of 70+. The XSP1 luminaire (see Figure 14) draws 57W, initially produces 3,850 lm, has a rated 73 LPW efficacy, and has a Type II distribution (see Figure 15). CREE claims a rated L_{70} lifetime of > 100,000 hours with an ambient operating temperature range of -40°C to 50°C (-40°F to 122°F). The datasheets also specify that the lens assembly (not the entire luminaire) is IP66 rated, and the luminaire has a BUG rating of B1-U0-G1.

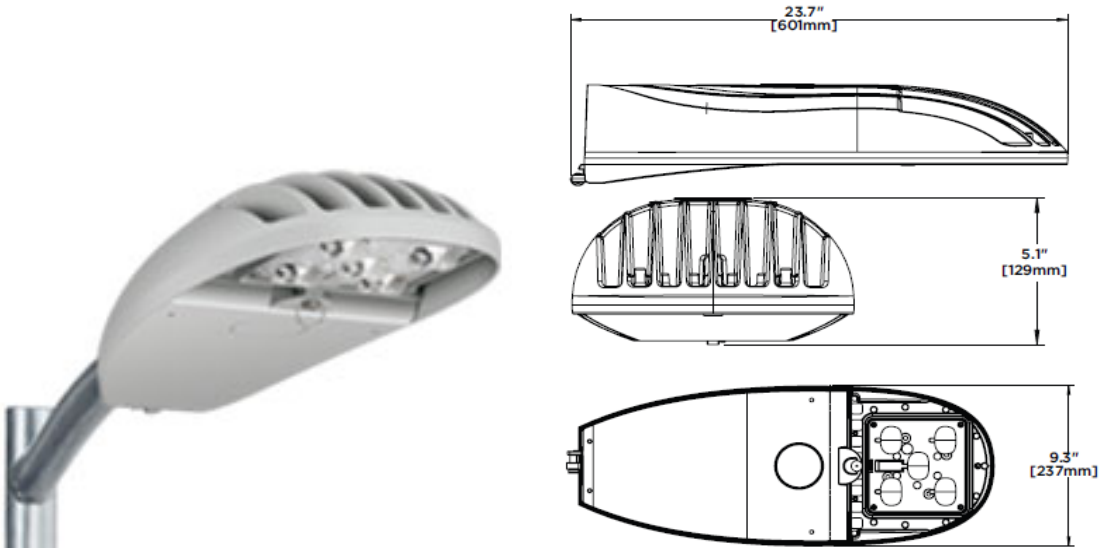

Figure 14: Appearance and dimensions of the CREE XSP1 luminaire

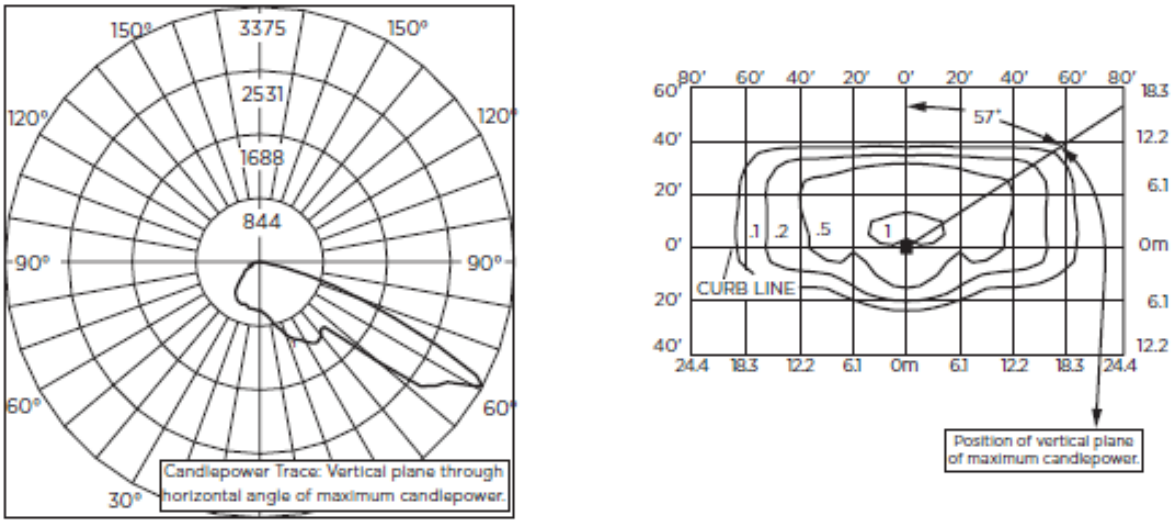

Figure 15: Photometric report for CREE's XSP1 luminaire

Cooper Lighting NAVION 03 SL2 Luminaire

This luminaire provided by Cooper Lighting had the catalog number NVNAA03EUSL24. It is a version of Cooper's NAVION roadway luminaire and contains a 42 LED array with a CCT of 4000K and a CRI of 70. The 03 SL2 luminaire (see Figure 16) draws 154W, initially produces 11,156 lm, has a 72 LPW efficacy, and has a Type II distribution (see Figure 17). Cooper estimates a rated L_{70} lifetime of > 250,000 hours with an operating ambient temperature range of -40°C to 40°C (-40°F to 104°F). The datasheets also specify that the LED squares are IP66 rated and the luminaire has a BUG rating of B2-U0-G2.

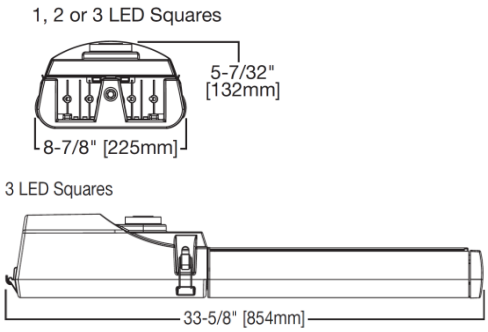

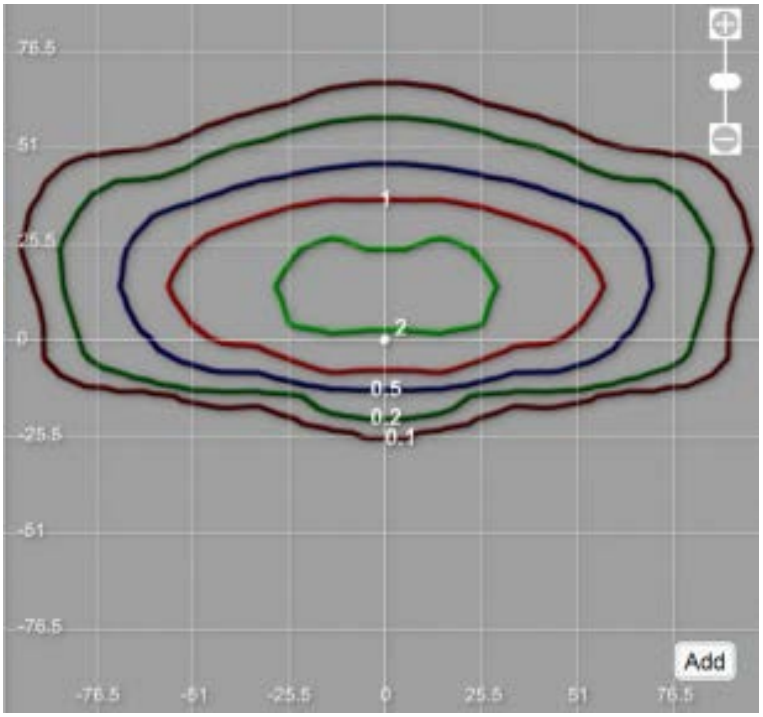

Figure 17: Isofootcandle plot for Cooper's NAVION 03 SL2 luminaire. Values are in units per mounting height of 25.5 ft.

Toshiba Luminaire

The Toshiba TGT LED luminaire used in this pilot demonstration has the catalog number GL42412SV1SAGR. It is the first luminaire offered by Toshiba that is designed specifically for roadway applications and has a CCT of 4100K and a CRI of 70. The TGT luminaire (see Figure 18) has a 42 LED array, draws 100W, initially produces 7,485 lm, has a 75 LPW efficacy, and has a Type II distribution (see Figure 19). Toshiba claims a rated L_{70} lifetime of 185,000+ hours with an operating ambient temperature range of -30°C to 40°C (-22°F to 104°F). The datasheets also specify that the luminaire has an IP65 rating and a BUG rating of B2-U2-G1.

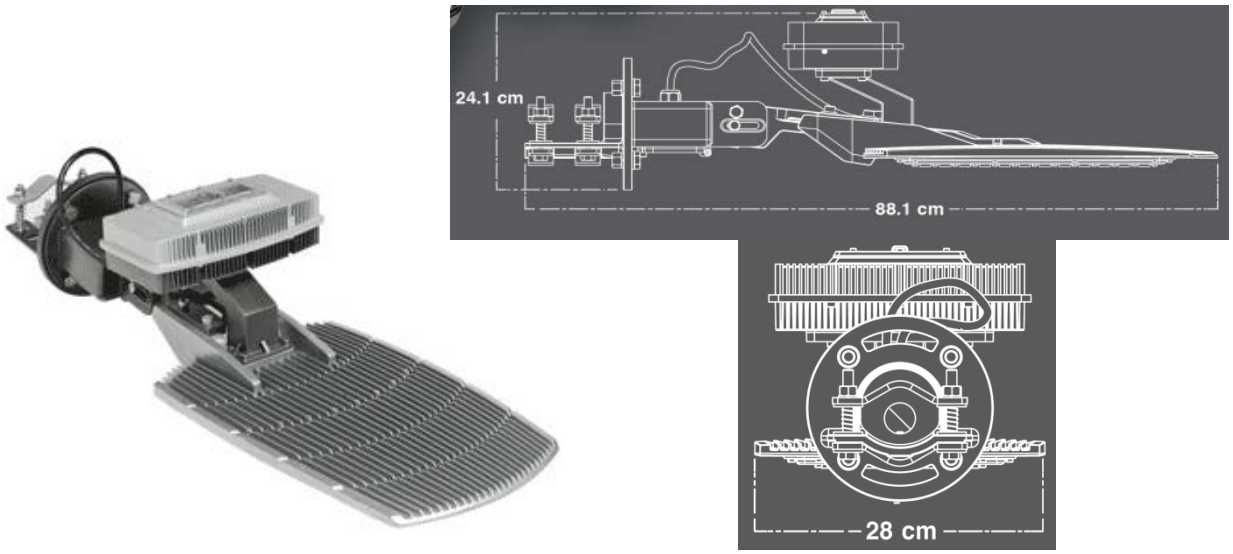

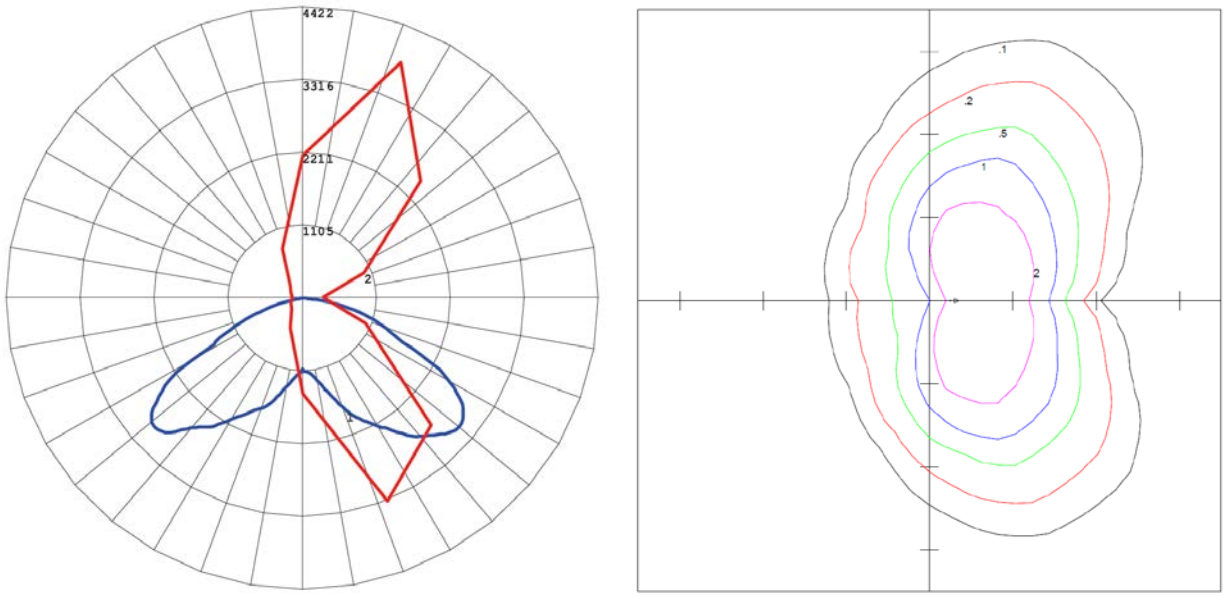

Figure 19: Photometric report for Toshiba's TGT luminaire

American Electric Lighting ATB0 30B Luminaire

This luminaire provided by American Electric Lighting (AEL) had the catalog number ATB0 30BLED E70 MVOLT R2 NR. It is part of AEL's Autobahn Series and contains a 30 LED array with a CCT of 4000K and a CRI of 70+. The ATB0 30B luminaire (see Figure 20) draws 71W, initially produces 6,392 lm, has a rated 90 LPW efficacy, and has a Type II distribution (see Figure 21). AEL claims a rated L_{70} lifetime of >100,000 hours for the LED light engines and 100,000 hours for the electronic driver—with an operating ambient temperature range of -40°C to 40°C (-40°F to 104°F). The datasheets also specify that the light engine has an IP66 rating and has a BUG rating of B2-U0-G2.

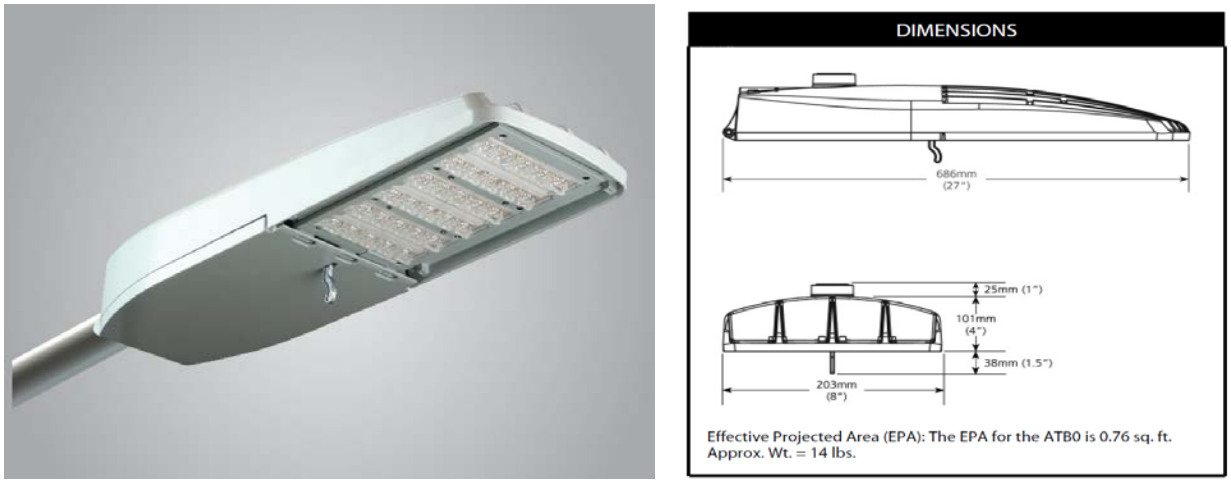

Figure 20: Appearance and dimensions of the AEL Autobahn Series ATB0 luminaire

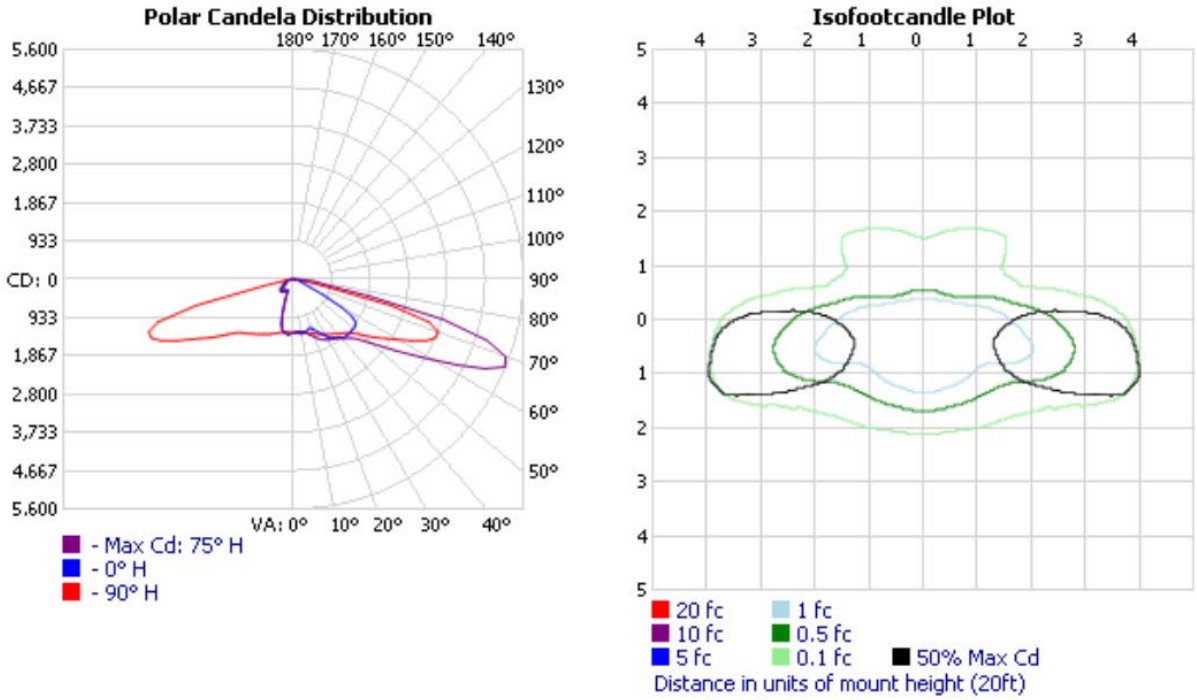

Figure 21: Photometric report for AEL's 30B luminaire

CREE XSP2 Luminaire

This luminaire provided by CREE had the catalog number BXSPAO2BA-US. It is part of CREE's XSP Series and contains a 10 LED array with a CCT of 5700K and a CRI of 70+. The XSP2 luminaire (see Figure 22) draws 106W, initially produces 7,700 lm, has a rated 73 LPW efficacy, and has a Type II distribution (See Figure 23). CREE claims a rated L_{70} lifetime of > 100,000 hours with an ambient operating temperature range of -40°C to 50°C (-40°F to 122°F). The datasheets also specify that the lens assembly (not the entire luminaire) is IP66 rated, and the luminaire has a BUG rating of B2-U0-G2.

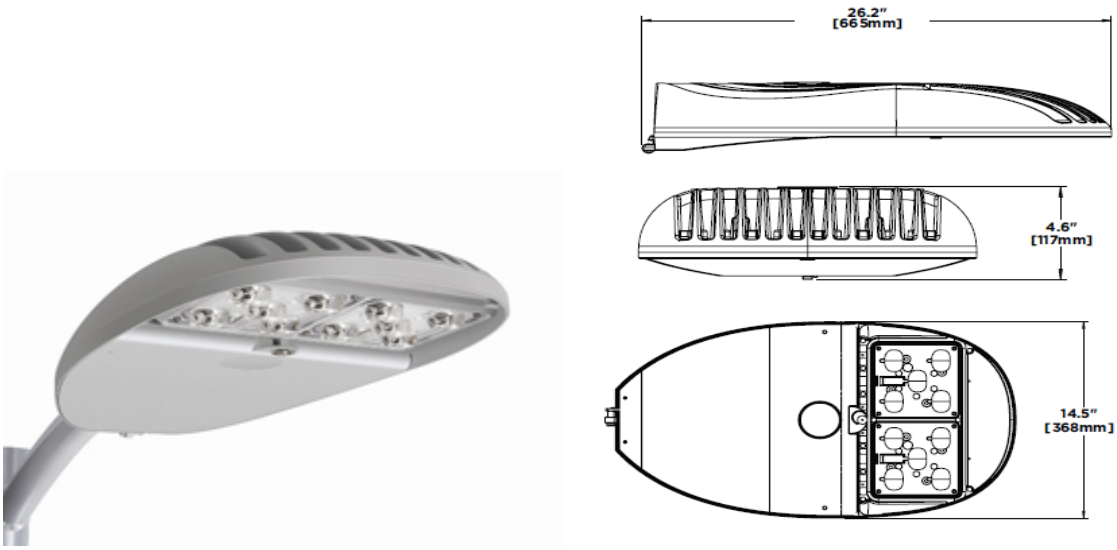

Figure 22: Appearance and dimensions of the CREE XSP2 luminaire

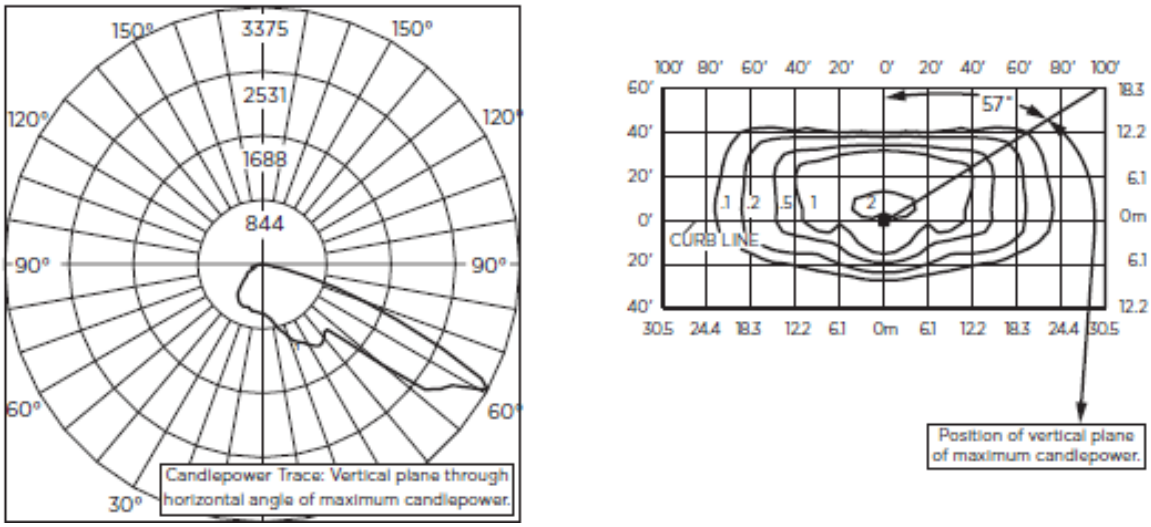

Figure 23: Photometric report for CREE's XSP2 luminaire

Cooper Lighting NAVION 02 SL3 Luminaire

This luminaire provided by Cooper Lighting had the catalog number NVNAA02EUSL34. It is a version of Cooper's NAVION roadway luminaire and contains a 28 LED array with a CCT of 4000K and a CRI of 70. The 02 SL3 luminaire (see Figure 24) draws 103W, initially produces 7,331 lm, has a 72 LPW efficacy, and has a Type III distribution (see Figure 25). Cooper estimates a rated L_{70} lifetime of > 250,000 hours with an operating ambient temperature range of -40°C to 40°C (-40°F to 104°F). The datasheets also specify that the LED squares are IP66 rated, and the luminaire has a BUG rating of B1-U0-G2.

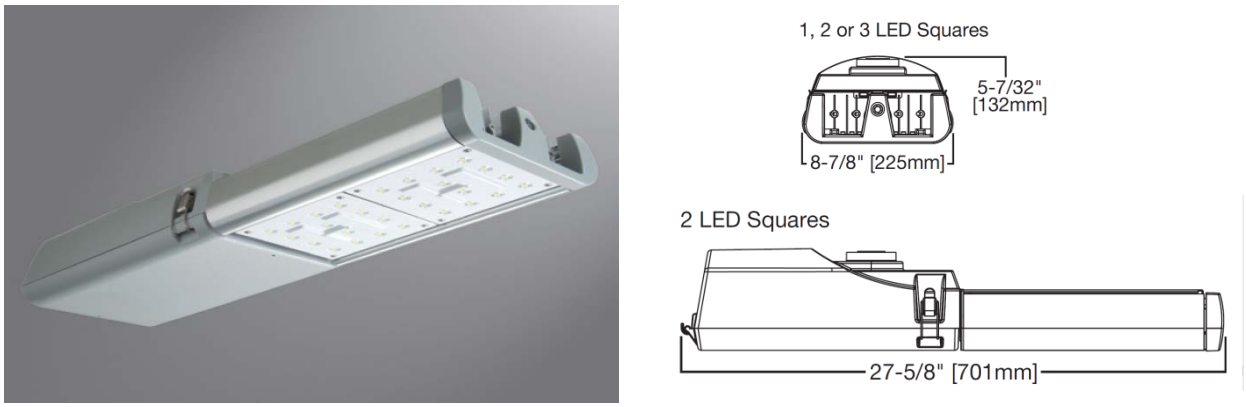

Figure 24: Appearance and dimensions of the Cooper Lighting NAVION 02 luminaire

Figure 25: Isofootcandle plot for Cooper's NAVION 02 SL3 luminaire. Values are in units per mounting height of 25.5 ft.

GE Luminaire

The GE ERS2 LED luminaire used in this pilot demonstration has the catalog number ERS2-0-EX-DX-5-57-1. It is part of GE's Evolve™ LED roadway lighting series and contains a 56 LED array with a CCT of 5700K and a CRI of 70. The ERS2 luminaire (see Figure 26) draws 94W, initially produces 7,900 lm, has an 84 LPW efficacy, and has a very short asymmetric forward distribution (see Figure 27). GE claims a rated L_{70} lifetime of 150,000 hours with an operating ambient temperature range of -40°C to 50°C (-40°F to 122°F). The datasheets specify the luminaire has an IP65 rating and a BUG rating of B2-U0-G1.

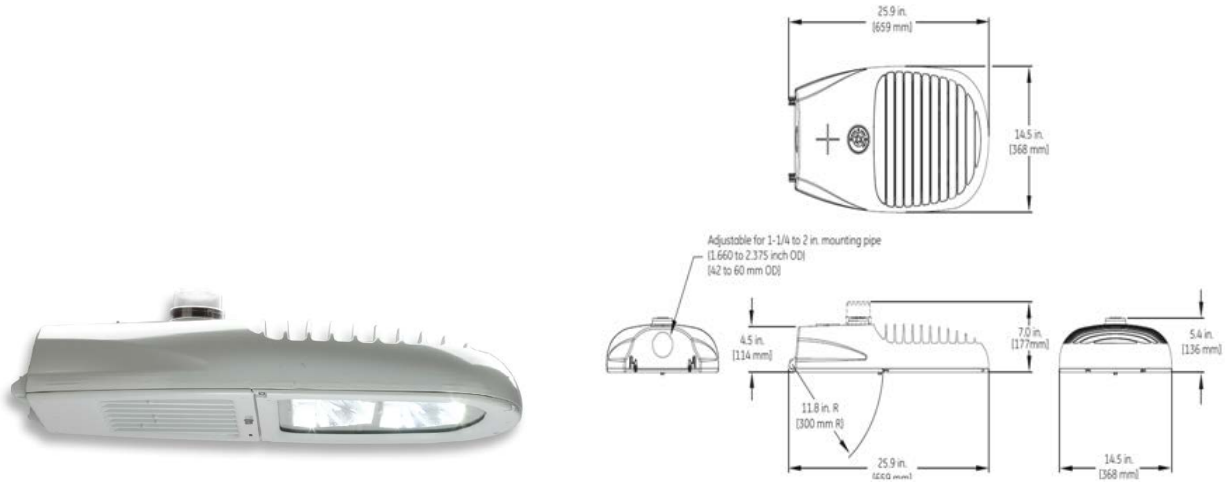

Figure 26: Appearance and dimensions of the GE ERS2 luminaire

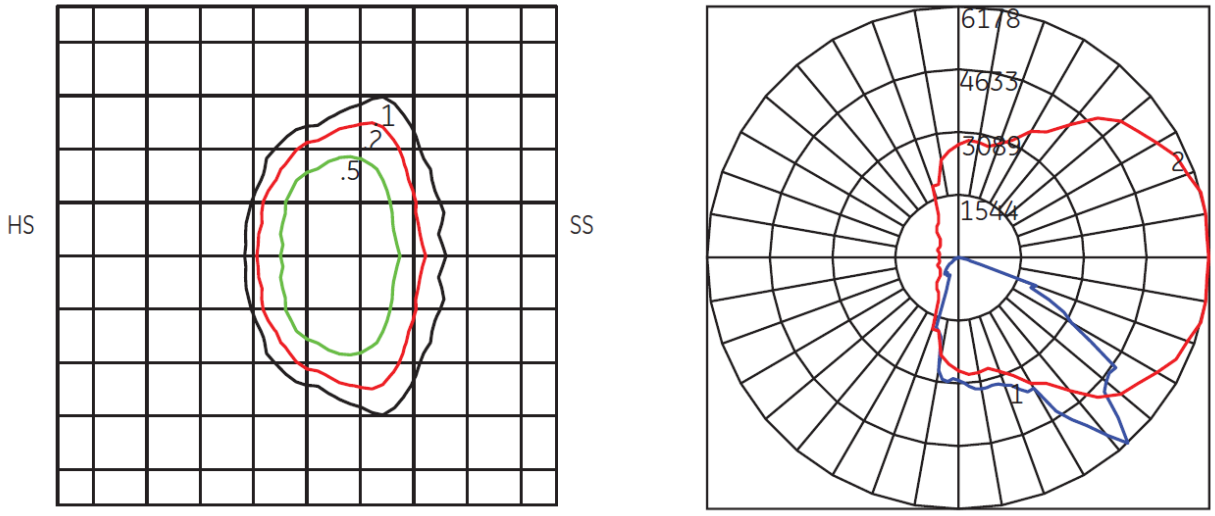

Figure 27: Photometric report for GE's ERS2 luminaire

Hubbell Lighting Luminaire

The Hubbell Lighting Cimarron LED luminaire used in this pilot demonstration has the catalog number CL1A30LU5K2DB. It is part of Hubbell's Cimarron LED series and contains a 30 LED array with a CCT of 5000K and a CRI of 70. The CL1 luminaire (see Figure 28) draws 70W, initially produces 6,754 lm, has a 96 LPW efficacy, and has a Type II distribution (see Figure 29). Hubbell claims a rated L_{70} lifetime of 215,000 hours with an operating ambient temperature range of -30°C to 40°C (-22°F to 104°F). The datasheets also specify that the luminaire has an IP65 rating and a BUG rating of B2-U1-G2.

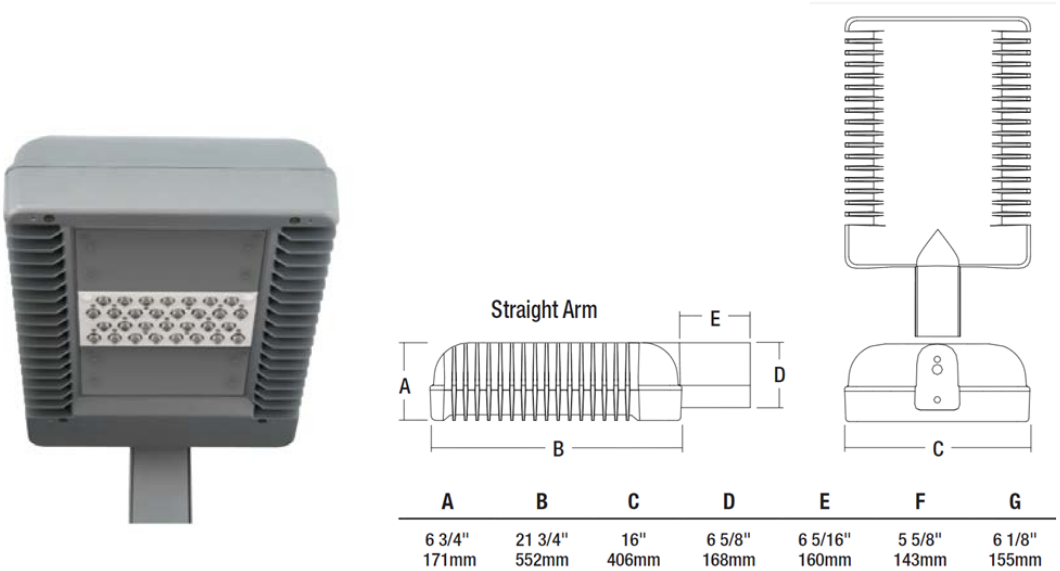

Figure 28: Appearance and dimensions of the Hubbell Cimarron CL1 luminaire

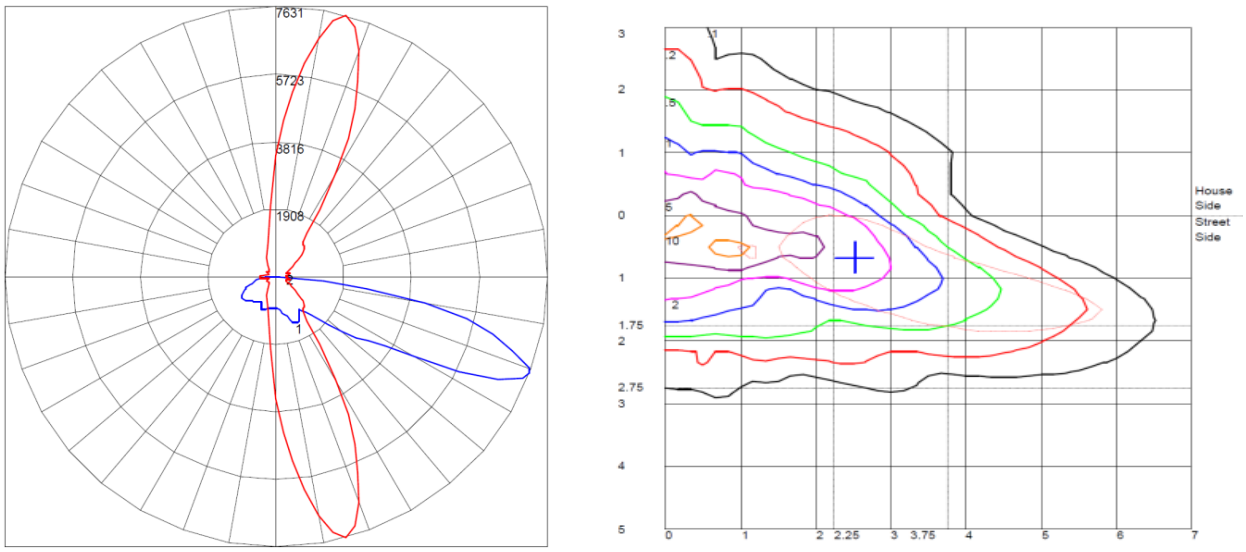

Figure 29: Photometric report for Hubbell's Cimarron CL1 luminaire

SDL Lighting Luminaire

The SDL Lighting LED luminaire used in this pilot demonstration has the catalog number 25F-LE3-84L. It is part of SDL's Modula series and contains a 42 LED array with a CCT of 5770K and a CRI of 68. The CL1 luminaire (see Figure 30) draws 84W, initially produces 6,695 lm, has an 80 LPW efficacy, and has a Type III distribution (See Figure 31). SDL claims a rated L_{70} lifetime of 70,000 hours with an operating ambient temperature range of -30°C to 50°C (-22°F to 122°F). The datasheets also specify that the luminaire has an IP67 rating and a BUG rating of B2-U0-G2.

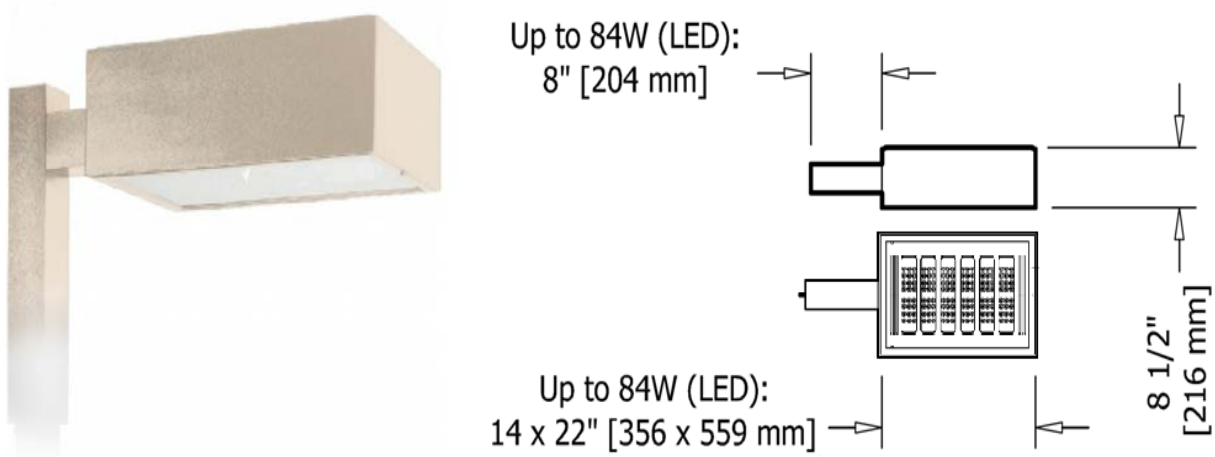

Figure 30: Appearance and dimensions of the SDL Lighting 25F luminaire

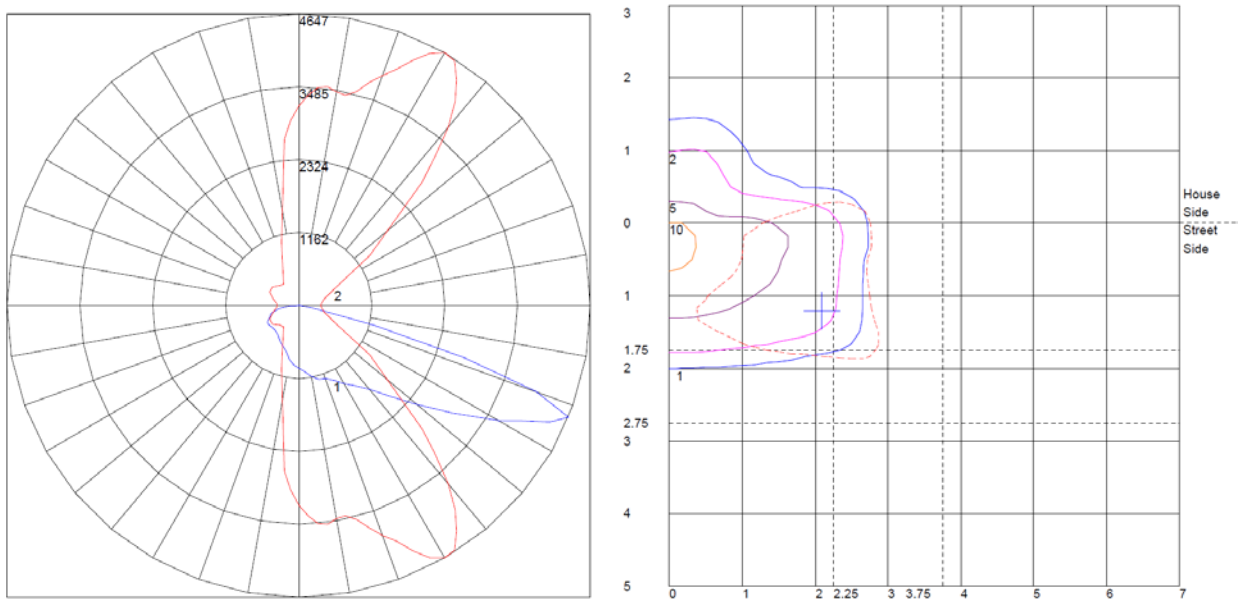

Figure 31: Photometric report for SDL Lighting's 25F luminaire

Comparison of Specifications

Table 5: Summary and Comparison of Specifications for Roadway Luminaires Used in Pilot Demonstration

Luminaire	CCT (K)	CRI	Power Draw (W)	Lumens	Efficacy (LPW)	Distribution Type	L_{70} Lifetime (hours)	Operating Ambient Temp. Range	IP Rating	BUG Rating
HPS	2,100	22	302	31,250	104	II	21,000 (complete failure)	-	IP55	B3-U0-G3
AEL ATB0 20A	4,000	70+	51	3,932	77	II	100,000+	-40°C to 40°C	IP66	B1-U0-G2
CREE XSP1	5,700	70+	57	3,850	73	II	100,000+	-40°C to 50°C	IP66	B1-U0-G1
Cooper Navion 03 SL2	4,000	70	154	11,156	72	II	250,000+	-40°C to 40°C	IP66	B2-U0-G2
Toshiba TGT	4,100	70	100	7,485	75	II	185,000+	-30°C to 40°C	IP65	B2-U2-G1
AEL ATB0 30B	4,000	70+	71	6,392	90	II	100,000+	-40°C to 40°C	IP66	B2-U0-G2
CREE XSP2	5,700	70+	106	7,700	73	II	100,000+	-40°C to 50°C	IP66	B2-U0-G2
Cooper Navion 02 SL3	4,000	70	103	7,331	72	III	250,000+	-40°C to 40°C	IP66	B1-U0-G2
GE ERS2	5,700	70	94	7,900	84	very short asymmetric forward	150,000	-40°C to 50°C	IP65	B2-U0-G1
Hubbell Cimarron CL1	5,000	70	70	6,754	96	II	215,000	-30°C to 40°C	IP65	B2-U1-G2
SDL 25F	5,770	68	84	6,695	80	III	70,000	-30°C to 50°C	IP67	B2-U0-G2

Power Measurement and Verification

Prior to installation along Coulter Blvd., each LED roadway luminaire was tested to measure and verify (M&V) its power draw and operation. Voltage and current measurements were taken at the point of contact between the line and luminaire circuitry. Direct power measurements for the incumbent HPS luminaires were not taken. The voltage for the laboratory measurements was 120V to 122V, and the current draw ranged from 0.41A to 1.24A. Results for the laboratory power M&V were averaged for each set of LED roadway luminaires and are displayed below in Table 6.

Table 6: Laboratory Power Measurement and Verification Results of LED Roadway Luminaires

Luminaire	Average Voltage (V)	Average Current (A)	Average Measured Power (W)	Rated Power (W)	Power M&V Difference (%)
AEL ATB0 20A	122	0.42	51	51	0
CREE XSP1	122	0.46	56	53	+6
Cooper Navion 03 SL2	122	1.24	151	154	-2
Toshiba TGT	120	0.88	106	101	+5
AEL ATB0 30B	122	0.55	67	75	-11
CREE XSP2	122	0.84	102	101	+1
Cooper Navion 02 SL3	122	0.8	98	101	-3
GE ERS2	122	0.82	100	94	+6
Hubbell Cimarron CL1	122	0.74	90	73	+23
SDL 25F	120	1.02	122	84	+45

As can be seen in Table 6, the laboratory M&V results revealed some significant disagreement between measured and manufacturer-rated power draw. The AEL ATB0 30B was measured to draw 11% less power than its rating, the Hubbell Cimarron CL1 was measured to draw 23% more power than its rating, and the SDL was measured to draw 45% more power than its rating. All other LED roadway luminaire power measurements were within 6% agreement. Because of the large discrepancy between laboratory-measured power values and manufacturer-reported power values for several products, laboratory M&V was perceived as crucial to verify the validity of power draw values claimed by manufacturers.

Field Measurement Results

The illuminance criteria for Coulter Blvd. were based on the recommendations for roadway lighting in the American National Standard Practice for Roadway Lighting, ANSI/IESNA RP-8-00. These recommended values for different types of roadways are provided at the end of the How-To-Manual (see pg. 16). It was determined that Coulter Blvd. falls under the local-intermediate classification with R2/R3 pavement. Thus it is recommended that an average of 0.7 fc be maintained with an average to minimum uniformity ratio of 6:1.

Most of the LED luminaires were selected based upon manufacturers' calculations using AGi32 Roadway Optimizer lighting simulation software. During the selection process, it was discovered that the in-line orientation with 300-ft spacing does not allow any type of roadway luminaire at a height of 25.5 ft to achieve the recommended illuminance criteria without producing blinding glare. Therefore, the four LED luminaires installed in this layout (at the west end of Coulter Blvd.) were selected primarily for aesthetic and energy consumption comparison purposes.

The illuminance field measurement grids (see Figures 32-41) were developed to provide footcandle measurements at important, equidistant locations along the roadway and sidewalk for each orientation. Initial footcandle values produced by the incumbent 250W HPS luminaires were measured during the night of September 24, 2012. Measurements of the post-installation footcandle values produced by the LED luminaires were preformed during the night of October 2, 2012. On both nights, the background illuminance was measured to be 0.00 fc. Illustrative representations of the results are provided in Figures 32-41. Please refer to Appendix C for nighttime photographs of the operational LED luminaires. The following equipment was used to conduct the tests:

- Extech Instruments HD450 No. 11 112187 light meter
- Bosch CLR130 Distance Measurer
- Duct tape (to mark measurement locations on roadway)

<u>Key for Illuminance Measurement Results</u>

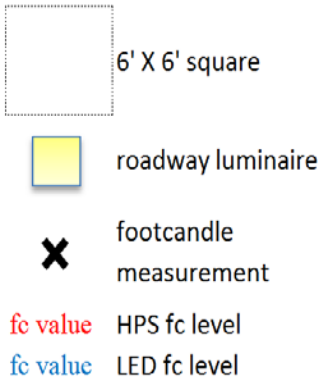

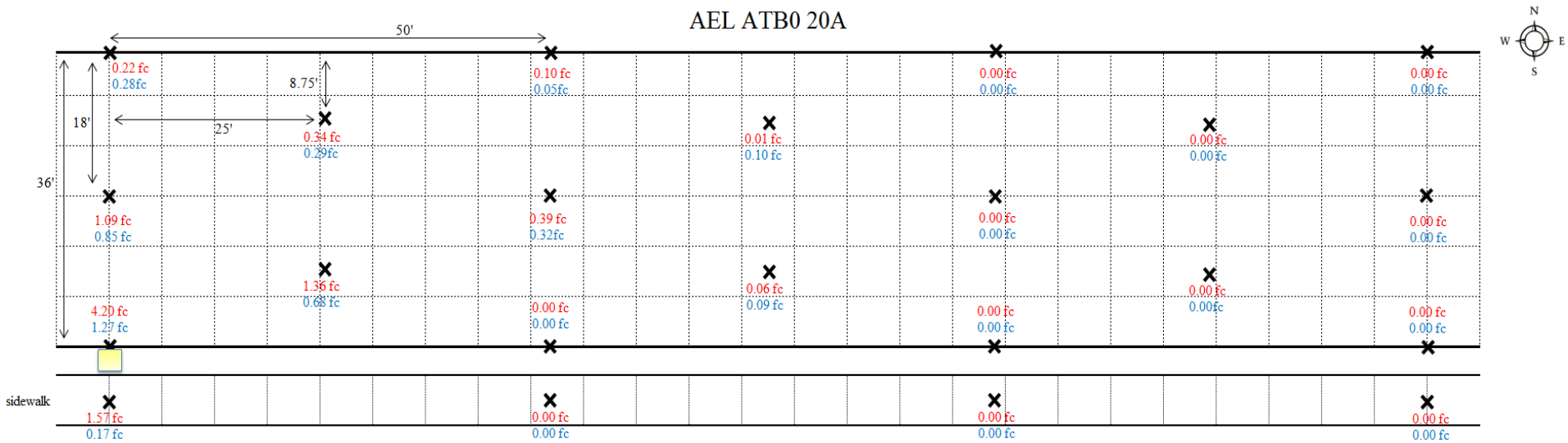

Figure 32: Field measurement results for the AEL ATB0 20A luminaire

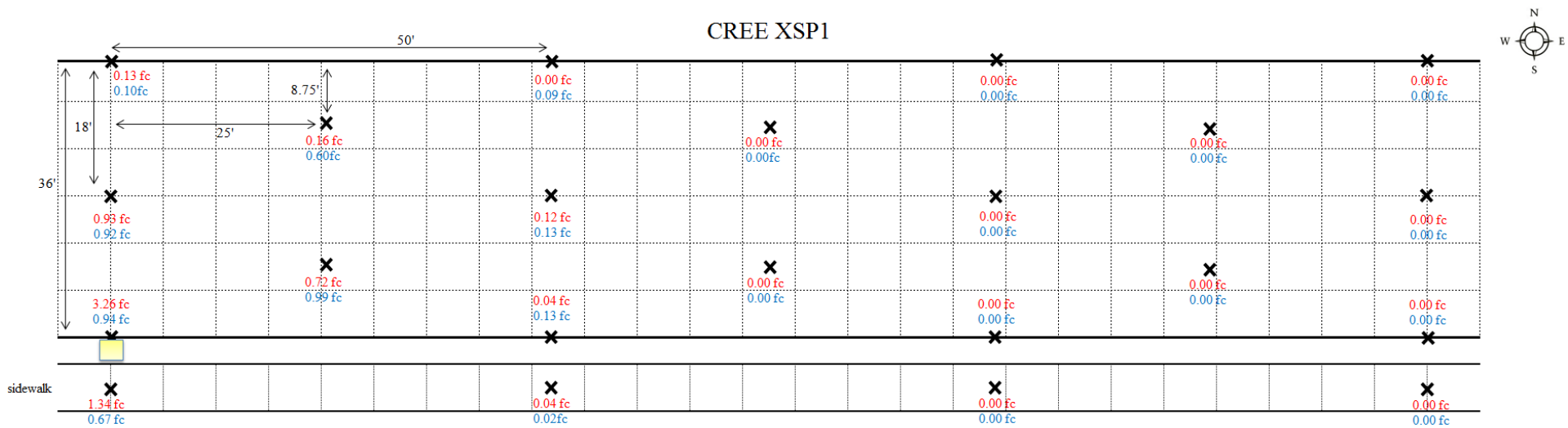

Figure 33: Field measurement results for the CREE XSP1 luminaire

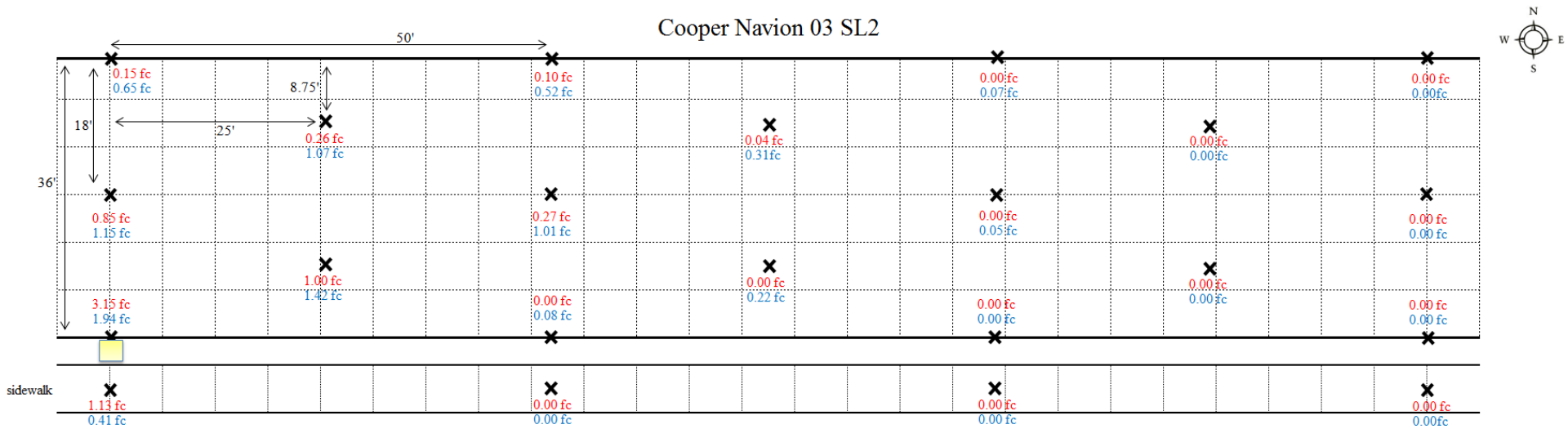

Figure 34: Field measurement results for the Cooper NAVION 03 SL2 luminaire

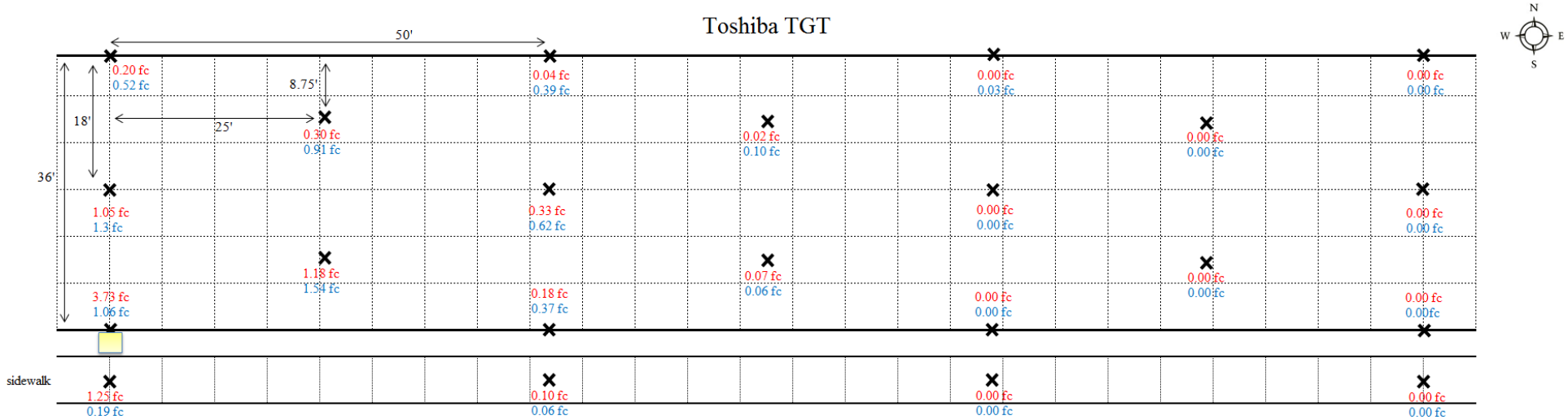

Figure 35: Field measurement results for the Toshiba TGT luminaire

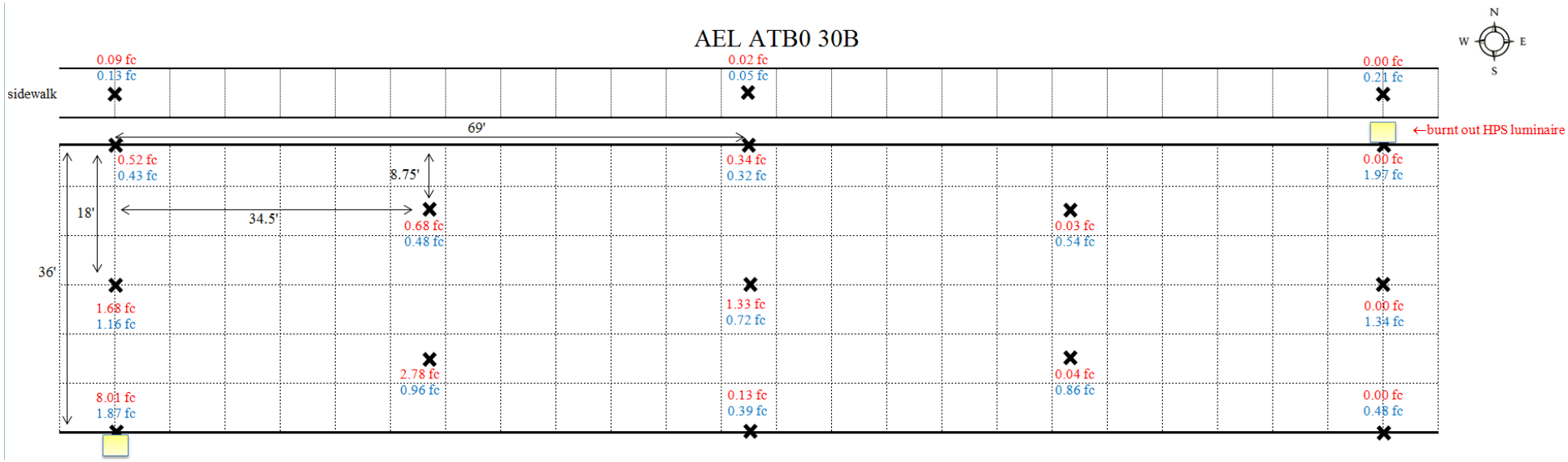

Figure 36: Field measurement results for the AEL ATB0 30B luminaire

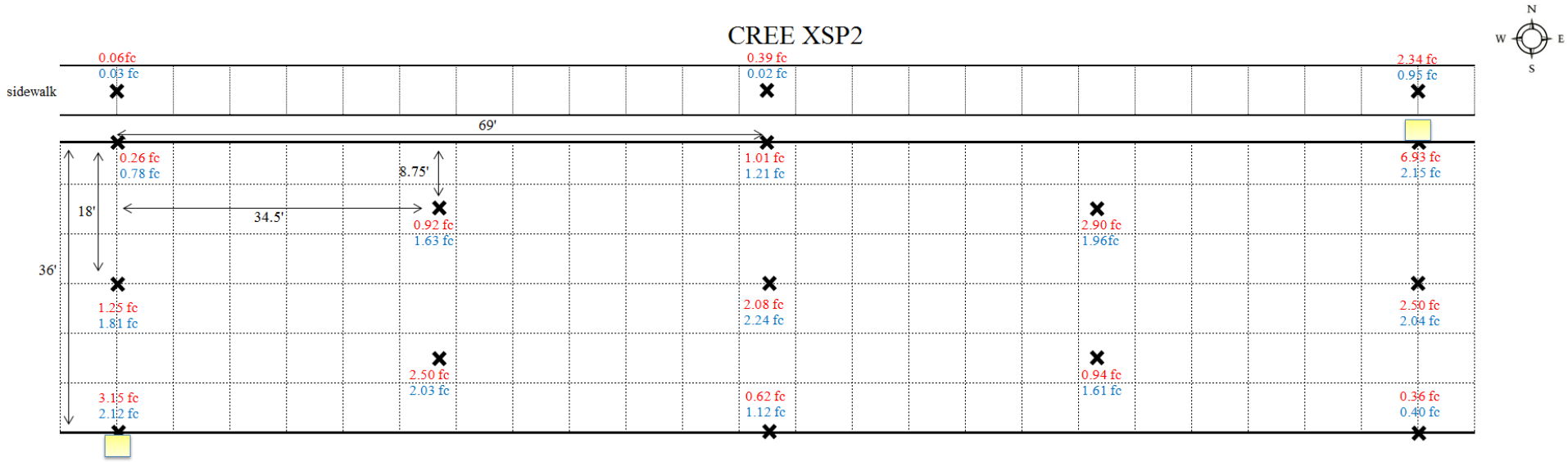

Figure 37: Field measurement results for the CREE XSP2 luminaire

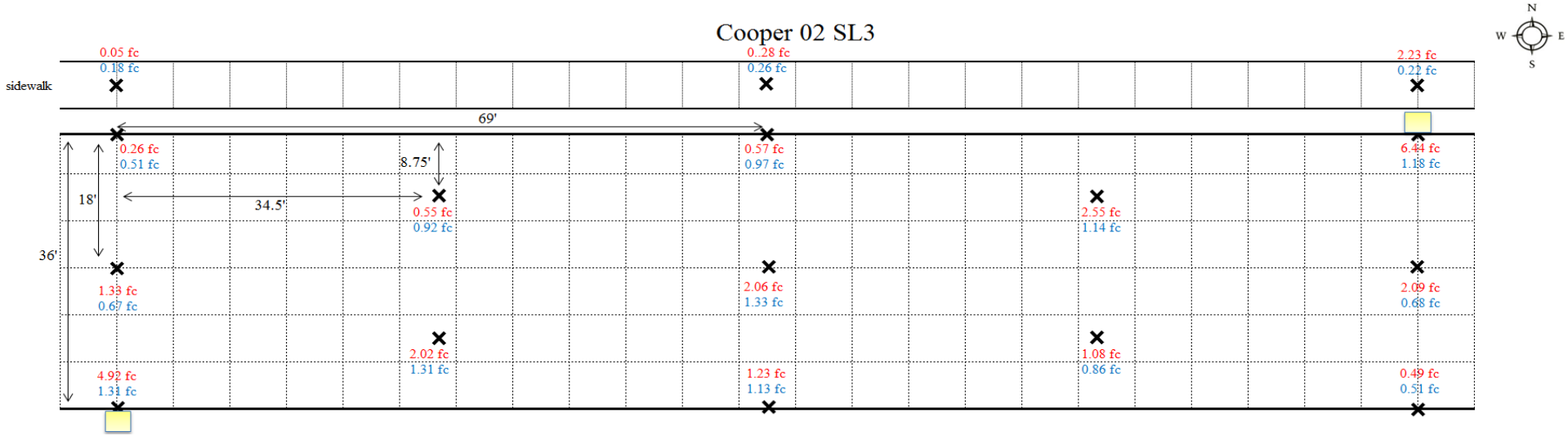

Figure 38: Field measurement results for the Cooper NAVION 02 SL3 luminaire

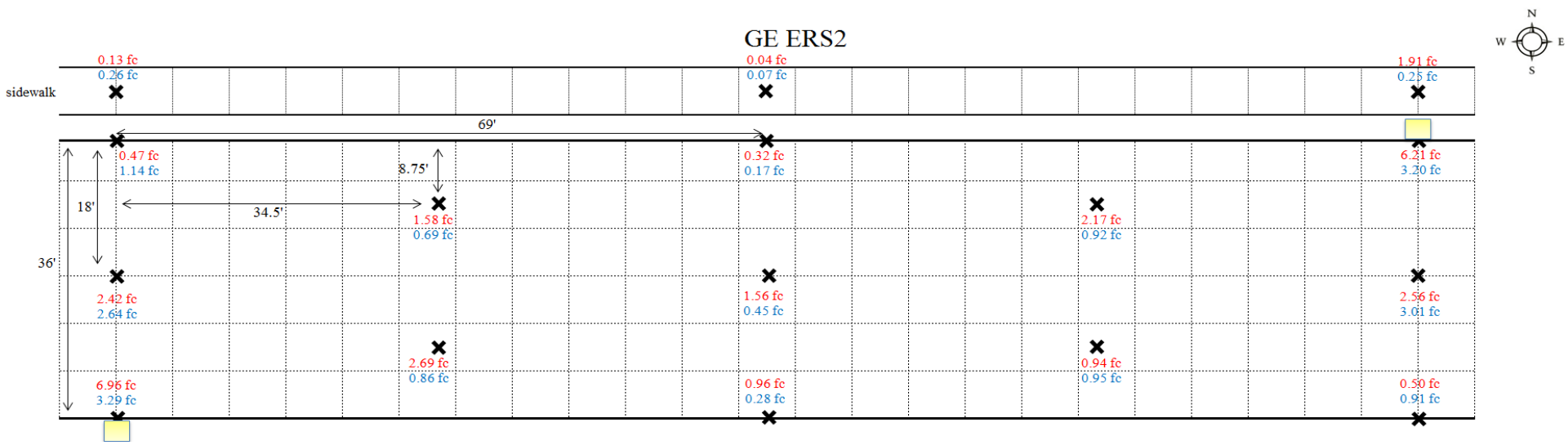

Figure 39: Field measurement results for the GE ERS2 luminaire

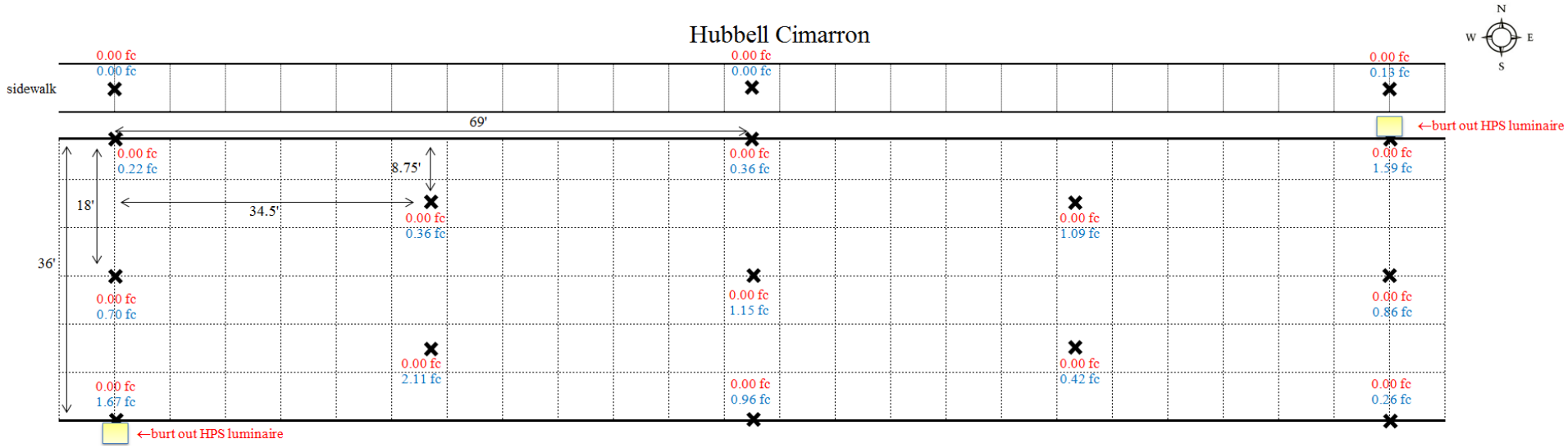

Figure 40: Field measurement results for the Hubbell Cimarron luminaire

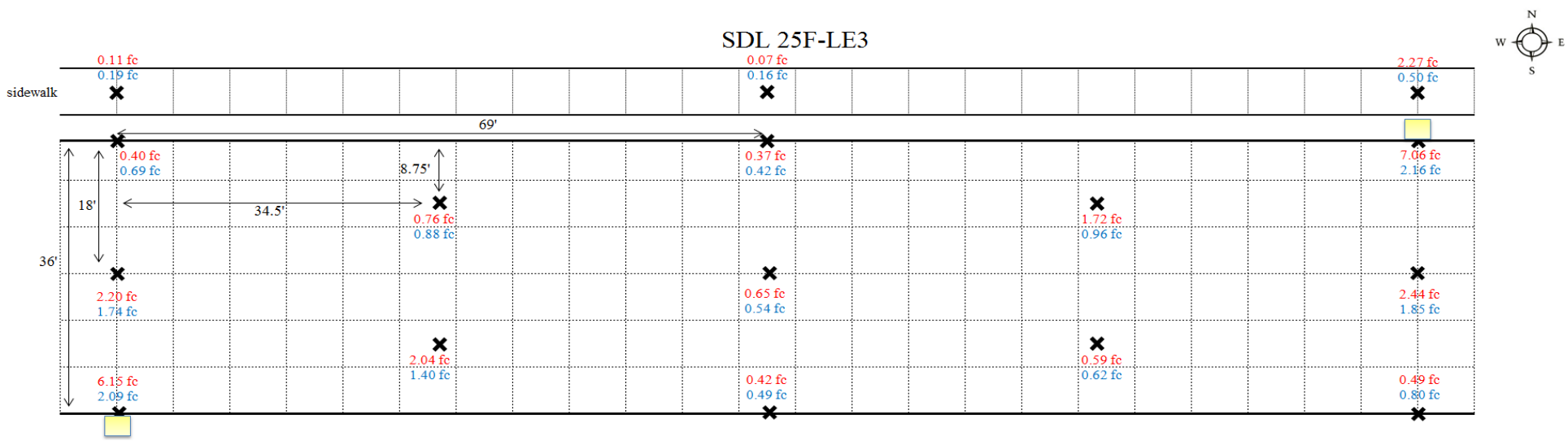

Figure 41: Field measurement results for the SDL 25F-LE3 luminaire

Examination of results presented in Figures 32-41 shows that the incumbent HPS luminaires and the new LED luminaires in the staggered orientation produced overall average measured footcandle levels of 2.02 fc and 1.14 fc, respectively—both well above the 0.7 fc recommended by ANSI/IESNA RP-8-00. It can also be determined that the incumbent HPS luminaires and the new LED luminaires in the in-line orientation produced average measured footcandle levels of 0.36 fc and 0.32 fc, respectively. These are both roughly half the recommended level of 0.7 fc.

The results also yield that the measured uniformity ratios produced by the LED luminaires in the staggered orientation range from 0.8 to 5.4 times lower than those produced by the HPS luminaires. This comparison cannot justifiably be made for the in-line orientation luminaires since the 300-ft spacing is too far for roadway luminaires located 25.5 ft off the ground to spread light 150 ft away. Thus both uniformity ratios for the in-line orientation approach infinity.

DISCUSSION OF RESULTS

The most noticeable issue with the results is the asymmetric nature of the footcandle levels for the luminaires in the staggered orientation. According to theory and the AGi32 reports, these values should all be diagonally symmetric about the centerline. This is not the case with the field measurements because of the existence of young trees along both sides of the roadway. The trees differ in height, shape, and spacing—which only compound the issue of asymmetric measurements. Trees growing between the in-line luminaires had similarly disruptive effects by creating abrupt pockets of darkness where significant quantities of light would otherwise be present.

Even though the incumbent HPS luminaires produced higher average illuminance levels, their uniformity ratios were significantly worse than those generated by the LED luminaires with the only exception being the GE ERS2. This is due to the formation of very bright pools of light directly beneath the HPS luminaires contrasted with the precise optical control of LED technology. It can therefore be concluded that even though the LED luminaires are providing fewer photopic lumens on the roadway, they are making better use of them by minimizing areas of darkness—thus providing a more evenly distributed and safer roadway lighting pattern.

It should also be noted that these are initial illuminance values for the LED luminaires and somewhat depreciated illuminance values for the HPS luminaires. The HPS luminaires have been up for anywhere between zero and six years and will eventually depreciate by 10% to 15% before burning out after roughly 6.5 years of operation. Since LED luminaire output slowly depreciates over time, the measured illuminance values will only decrease with time. This factor should be taken into consideration when examining the field measurements and comparing them to the recommended lifetime average maintained levels. Based on the initial illuminance value measurements and assuming an end of life L_{70} rating, only the SDL, GE, and CREE luminaires would be expected to meet the maintained illuminance recommendations of ANSI/IESNA RP-8-00 at their end of life. The AEL, Cooper, and Hubbell luminaires would be expected to meet the maintained illuminance requirements at L_{80}, L_{73}, and L_{78} ratings, respectively. Note that the HPS luminaires may also drop below the recommendations as they approach their end-of-life rating.

Recall that because the in-line orientation with 300-ft spacing does not allow any type of roadway luminaire at a height of 25.5 ft to achieve the recommended illuminance criteria without producing blinding glare, the four luminaires installed in that orientation (Figures 32-35) were selected primarily for aesthetic and energy consumption comparison purposes. During the daytime, none of these luminaires blend in well with the traditional shoebox-style HPS luminaires. They also appear to be at odds with the poles upon which they were mounted. Of course, none of this is noticeable at night. The only nighttime aesthetic concern these luminaires have is the glare they produce and the potential for possibly creating visibility issues. The most noticeable advantage provided by these LED roadway luminaires over HPS technology was their improved CRI and the enhanced ability to ascertain colors and identify objects.

Energy savings were also significant. The AEL ATB0 20A and CREE XSP1 luminaires were measured to draw over 80% less power than their 250W HPS counterparts. The Cooper 03 SL2 luminaire drew 50% less power and the Toshiba TGT luminaire was measured to draw 67% less power at full strength. The full-on power draw of the Toshiba luminaire is distinguished here because it utilized a proprietary control system that allowed its three LED arrays to be phased on or off depending on ambient light conditions in an attempt to provide gentle daytime-nighttime-daytime lighting transitions. Attempts to quantify savings provided by this unique control strategy were unsuccessful since the central control system for the entire network of roadway luminaires only supplied current during ambient light conditions which necessitated the use of all three LED arrays. Therefore measurements of power draw vs. time for this luminaire did not reveal any energy savings when compared to a full-on, full-off control strategy. As long as this control system doesn't contribute to maintenance issues with its increased complexity, it appears to be a useful and worthwhile feature that should be investigated further and considered when designing a roadway lighting control strategy.

CONCLUSION

The goal of this report was to develop a cost-benefit comparison analysis of new energy-efficient technologies available for use in roadway lighting. Identification of perceived barriers to the implementation of these technologies in this market was a secondary goal. This was accomplished by creating a 10-step how-to manual for the appropriate selection of LED roadway luminaires, providing a comprehensive discussion of induction and LED roadway luminaire technologies, carrying out a life-cycle economic analysis, and documenting the implementation and outcome of a pilot demonstration of various LED technologies along Coulter Blvd. in Chanhassen, Minn. It is expected that this report will motivate and empower cities, counties, and other entities to implement the installation of new roadway lighting technologies.

Aside from product performance, success of a given installation largely depends on parameters of the location and the specific information provided to manufacturers. The 10-step how-to manual was designed to help maximize this success rate by providing cities and municipalities with a simplified step-by-step process for properly requesting and selecting roadway lighting luminaires from manufacturers. The LED Economics Estimation Calculator and LED Roadway Specification Form were developed as integral tools for the manual. Terminology used and recommended values needed to complete the Roadway Specification Form are included in three supplemental documents: an Ingress Protection (IP) Rating Guide, an Illumination–Uniformity Chart, and Roadway Lighting Diagrams (which includes fixture dimensions, pole configurations and lighting distribution classifications).

Research indicated that a utility-led pilot program is warranted before LED roadway lighting can be effectively incorporated into CIPs. This is recommended because several important steps must be undertaken before a full-fledged program can be successfully implemented. These steps included: 1) standardizing sets of LED luminaires for specific roadway applications under utility-owned rate codes; 2) selecting criteria (such as warranty, illuminance recommendations, BUG rating, and IP rating) for qualifying products under customer-owned rate codes; 3) determining the extent to which LED roadway luminaires could be expected to decrease the off-peak load; and 4) forming rate codes for various combinations of utility- and customer-owned LED roadway luminaires.

The economic analysis concluded that a complete retrofit of all existing HPS roadway lighting to LED roadway lighting can be economically attractive for an organization currently leasing roadway luminaires from an IOU—and can greatly improve with the addition of available rebates. More specifically, if a municipal utility is interested in replacing an entire HID roadway lighting system with LED roadway lighting technology, it can expect a payback of approximately 7 to 10 years without rebates—and several years quicker with rebates. A myriad of factors affected these final costs, and actual results are expected to vary considerably from this range of values.

The pilot demonstration provided the means to directly compare established HPS technology with emerging LED technology. The primary metrics of comparison were energy consumption, illuminance levels, and aesthetics. All of the evaluated LED luminaires had lower energy consumption than the incumbent baseline HPS luminaires, using roughly 50% to 80% less energy. In terms of illuminance, the HPS luminaires produced an overall 70% higher average photopic illuminance compared to the LED luminaires—although with only one exception the uniformity ratios generated by the HPS luminaires were significantly worse than those produced by LED technology. It is important to note that both technologies greatly exceeded the ANSI/IESNA RP-8-00 recommended maintained illuminance level of 0.7 fc.

In regard to aesthetic lighting metrics, the LED systems all offered better color rendering and most emitted greatly reduced uplight compared to HPS technology. The improved color rendering may bring with it an enhanced ability to ascertain colors and identify objects. It was also observed that care should be taken to pair LED luminaire designs with incumbent HPS luminaire and pole designs if uniform appearances are of great concern. Overall, the pilot demonstration confirmed that LED roadway technology can provide improved performance over HPS roadway technology while at the same time being cost-effective.

REFERENCES

Guo, Liping. "Intelligent Road Lighting Control Systems - Experiences, Measurements, and Lighting Control Strategies." Diss. Helsinki University of Technology, 2008. Web. http://lib.tkk.fi/Diss/2008/isbn9789512296200/isbn9789512296200.pdf

Illuminating Engineering Society of North America. *American National Standard Practice for Roadway Lighting, ANSI / IESNA RP-8-00.* New York: 2000. Print.

McLean, Dan. "Adaptive Roadway Lighting." *IMSA Journal*. Accessed 25 Jul. 2012. http://www.imsasafety.org/journal/so06/18.pdf

Minnesota Department of Transportation. *Roadway Lighting Design Manual, May 2010*. http://www.dot.state.mn.us/trafficeng/lighting/2010_Roadway_Lighting_Design_Manual.pdf

Richman, Eric. "The elusive "life" of LEDs: How TM-21 contributes to the solution." *LEDs Magazine*. November 2011. http://ledsmagazine.com/features/8/11/10/TM21fig1

APPENDIX A: ADDITIONAL RESOURCES

The following links are provided as resources should they be needed for additional information and/or clarification.

- American National Standards Institute (ANSI)
  http://www.ansi.org/

- American Society of Heating, Refrigerating, and Air-Conditioning Engineers
  http://www.ashrae.org/

- Illuminating Engineering Society of North America (IESNA)
  http://www.iesna.org/

- LEDs Magazine
  http://ledsmagazine.com/

- Lighting Research Center
  http://www.lrc.rpi.edu/

- Los Angeles LED Street Light Case Study
  http://www.dvrpc.org/energyclimate/eetrafficstreetlighting/pdf/CCI_Los_Angeles_LED_Streetlighting_Retrofit_Program_Report.pdf

- Minnesota Department of Transportation (MNDOT)
  www.dot.state.mn.us/

- National Electrical Manufacturers Association (NEMA)
  http://www.nema.org/

- Pacific Gas & Electric LED Roadway Lighting Assessment
  http://www.cree.com/~/media/Files/Cree/Lighting/Misc%20Tech%20Docs/EmergingTechnologyReportforLEDStreetLighting.pdf

- Pittsburg LED Street Light Project
  http://www.cmu.edu/rci/images/projects/led-updated-web-report.pdf

- U.S. Department of Energy GATEWAY Demonstrations
  http://www1.eere.energy.gov/buildings/ssl/gatewaydemos_results.html

- U.S. Department of Energy Municipal Solid-State Street Lighting Consortium
  http://www1.eere.energy.gov/buildings/ssl/consortium.html

- U.S. Department of Transportation
  http://www.dot.gov/

Rate 1: Xcel Owns, Installs, & Maintains All HID Roadway Lighting Equipment

* Assumed operating time is on 1/2 hr. after sunset and off 1/2 hr. before sunrise ≈ 3550 hrs/yr

* Levelized Cost of Energy and Services (LCOES) includes the Energy Charge, Environmental Improvement Rider, Fuel Cost Charge, Resource Adjustment, Interim Rate Adjustment, and State Tax

LCOES ≈ 0.169 $/kWh

Rates:

	Monthly Rate Per Luminaire				Quantity of Luminaires			
Type of Lamp	Overhead	Underground	Decorative	Residential U.G.	Overhead	Underground	Decorative	Residential U.G.
70W HPS	$8.88	$16.60						
100W HPS	$9.30	$17.02	$24.63	$6.08	74	608	4	171
150WHPS	$9.86	$17.55	$26.21	$6.89	17	21		171
200W HPS	$11.73							
250W HPS	$12.37	$19.89	$27.75		39	3		
400W HPS	$15.29	$22.07	$29.44					
175W MH	$14.02	$23.48	$29.44					

City's Annual Costs for HID Fixtures

70W HPS Overhead	$0	200W HPS Underground	$0	175W HPS Decorative	$0
100W HPS Overhead	$13,408	250W HPS Underground	$1,260	70W HPS Residential U.G.	$0
150W HPS Overhead	$3,776	400W HPS Underground	$0	100W HPS Residential U.G.	$24,377
200W HPS Overhead	$0	175W MH Underground	$0	150W HPS Residential U.G.	$31,887
250W HPS Overhead	$12,855	70W HPS Decorative	$0	200W HPS Residential U.G.	$0
400W HPS Overhead	$0	100W HPS Decorative	$1,461	250W HPS Residential U.G.	$0
175W MH Overhead	$0	150W HPS Decorative	$0	400W HPS Residential U.G.	$0
70W HPS Underground	$0	200W HPS Decorative	$0	175W MH Residential U.G.	$0
100W HPS Underground	$166,491	250W HPS Decorative	$0		
150W HPS Underground	$6,602	400W HPS Decorative	$0	City's Rate 1 Total Annual Cost	$262,117

Rate 2: Xcel Installs & Maintains HID Fixtures, City Owns Equipment & HID Fixtures

* Assumed operating time is on 1/2 hr. after sunset and off 1/2 hr. before sunrise ≈ 3550 hrs/yr
* Assumed average bulb life expectancy ≈ 6 years
* Levelized Cost of Energy and Services (LCOES) includes the Energy Charge, Environmental Improvement Rider, Fuel Cost Charge, Resource Adjustment, Interim Rate Adjustment, and State

LCOES ≈ 0.064 $/kWh

Rates:

	Monthly Rate Per Luminaire		Quantity of Luminaires		Lamp Purchase Cost	
Lamp Power	HPS Ornamental	MV Ornamental	HPS Ornamental	MV Ornamental	HPS Ornamental	MV Ornamental
50W	$1.15				$2.19	$2.19
70W	$1.50				$3.06	$3.06
100W	$2.02	$1.95			$4.38	$4.38
150W	$2.81		17		$6.56	$6.56
175W		$3.07			$7.66	$7.66
200W	$3.79		74		$8.75	$8.75
250W	$4.80	$4.27	260		$10.94	$10.94
400W	$7.35	$6.83			$17.50	$17.50
700W		$11.58			$30.63	$30.63
750W	$11.98				$32.82	$32.82
1000W		$16.24			$43.76	$43.76

City's Annual Costs for HID Fixtures

50W HPS Ornamental	$0	50W MV Ornamental	$0
70W HPS Ornamental	$0	70W MV Ornamental	$0
100W HPS Ornamental	$0	100W MV Ornamental	$0
150W HPS Ornamental	$1,260	150W MV Ornamental	$0
175W HPS Ornamental	$0	175W MV Ornamental	$0
200W HPS Ornamental	$7,510	200W MV Ornamental	$0
250W HPS Ornamental	$33,297	250W MV Ornamental	$0
400W HPS Ornamental	$0	400W MV Ornamental	$0
700W HPS Ornamental	$0	700W MV Ornamental	$0
750W HPS Ornamental	$0	750W MV Ornamental	$0
1000W HPS Ornamental	$0	1000W MV Ornamental	$0
		City's Rate 2 Total Annual Cost	$42,067

Rate 3: Xcel Provides Electricity, City Owns, Installs, & Maintains All HID Roadway Lighting Equipment

* Assumed operating time is on 1/2 hr. after sunset and off 1/2 hr. before sunrise		3550	hrs/yr
* Levelized Cost of Services (LCOS) includes the Environmental Improvement Rider, Fuel Cost Charge, Resource Adjustment, Interim Rate Adjustment, and State Tax	LCOS ≈	0.034	$/kWh

Rates:

Customer Charge/meter/month	$8.65	
Energy Charge/kWh	$0.04589	

Inputs:

Number of Meters	16	
Power of 250W HPS Fixtures	302	
Number of 250W HPS Fixtures	264	
Bulb Purchase Cost	$10.94	
Bulb Installation Cost	$110	
Bulb Life Expectancy	6	years

City's Annual Costs for Each Type of Operating Expense

Annual Energy Costs*	$22,612	*Includes LCOS
Annual Maintenance Costs	$5,397	
Annual Metering Costs	$1,661	
City's Rate 3 Total Annual Cost	$29,670	

City's Total Annual HID Roadway Lighting Costs ≈ $333,853

Rate 1→ LED Rate 3: City Owns, Installs, & Maintains All LED Roadway Lighting Equipment

* Assumed HID fixtures are replaced by LED fixtures that consume 40% as much power:	0.4	
* Assumed operating time is on 1/2 hr. after sunset and off 1/2 hr. before sunrise ≈	3550	hrs/yr
* Assumed average purchase cost for new LED fixtures per Watt of energy consumed ≈	$5.50	/W
* Assumed energy charge/kWh ≈	$0.0459	
* Assumed practical lifetime of LED fixtures ≈	78,000	hours
* Assumed average pole lifetime ≈	30	years
* Assumed each LED fixture requires two hours of service over its lifetime ≈	$200.00	

* Levelized Cost of Services (LCOS) includes the Environmental Improvement Rider, Fuel Cost Charge, Resource Adjustment, Interim Rate Adjustment, and State Tax — LCOS ≈ 0.034 $/kWh

* Inquire with local electricity provider about energy efficient roadway lighting rebates — Rebate = $0.00000 /kWh decrease/fixture

Inputs:

	Quantity of Poles/Fixtures to Replace				Pole Purchase & Install Combined Cost				LED Fixture Purchase & Install Combined Cost			
Type of HID Lamp	Overhead	Underground	Decorative	Residential U.G.	Overhead	Underground	Decorative	Residential U.G.	Overhead	Underground	Decorative	Residential U.G.
70W HPS					$2,300	$2,300	$2,300	$2,300	$315	$315	$315	$315
100W HPS	74	608	4	171	$2,300	$2,300	$2,300	$2,300	$365	$365	$365	$365
150WHPS	17	21		171	$2,300	$2,300	$2,300	$2,300	$491	$491	$491	$491
200W HPS					$2,300	$2,300	$2,300	$2,300	$638	$638	$638	$638
250W HPS	39	3			$2,300	$2,300	$2,300	$2,300	$774	$774	$774	$774
400W HPS					$2,300	$2,300	$2,300	$2,300	$1,142	$1,142	$1,142	$1,142
175W MH					$2,300	$2,300	$2,300	$2,300	$572	$572	$572	$572

City's Initial Costs for LED Fixtures

28W LED Overhead	$0	80W LED Underground	$0	70W LED Decorative	$0
40W LED Overhead	$151,678	100W LED Underground	$95,897	28W LED Residential U.G.	$0
60W LED Overhead	$36,977	160W LED Underground	$0	40W LED Residential U.G.	$350,500
80W LED Overhead	$0	70W LED Underground	$0	60W LED Residential U.G.	$371,943
100W LED Overhead	$95,897	28W LED Decorative	$0	800W LED Residential U.G.	$0
160W LED Overhead	$0	40W LED Decorative	$8,199	100W LED Residential U.G.	$0
70W LED Overhead	$0	60W LED Decorative	$0	160W LED Residential U.G.	$0
28W LED Underground	$0	80W LED Decorative	$0	70W LED Residential U.G.	$0
40W LED Underground	$1,246,222	100W LED Decorative	$0		
60W LED Underground	$45,677	160W LED Decorative	$0	City's Total Initial Cost	$2,402,991

City's Annual Costs for LED Fixtures

28W LED Overhead	$0	80W LED Underground	$0	70W LED Decorative	$0
40W LED Overhead	$1,639	100W LED Underground	$130	28W LED Residential U.G.	$0
60W LED Overhead	$487	160W LED Underground	$0	40W LED Residential U.G.	$3,787
80W LED Overhead	$0	70W LED Underground	$0	60W LED Residential U.G.	$4,903
100W LED Overhead	$1,693	28W LED Decorative	$0	800W LED Residential U.G.	$0
160W LED Overhead	$0	40W LED Decorative	$89	100W LED Residential U.G.	$0
70W LED Overhead	$0	60W LED Decorative	$0	160W LED Residential U.G.	$0
28W LED Underground	$0	80W LED Decorative	$0	70W LED Residential U.G.	$0
40W LED Underground	$13,466	100W LED Decorative	$0		
60W LED Underground	$602	160W LED Decorative	$0	City's Total Annual Cost	$26,797

Rate 2 → LED Rate 3: City Owns, Installs, & Maintains All LED Roadway Lighting Equipment

* Assumed HID roadway fixtures are replaced by LED fixtures that consume 40% as much power:		0.4	
* Assumed operating time is on 1/2 hr. after sunset and off 1/2 hr. before sunrise ≈		3550	hrs/yr
* Assumed avg. purchase cost for new LED fixtures per Watt of energy consumed ≈		$5.50	/W
* Assumed energy charge/kWh ≈	$0.0459		
* Assumed practical lifetime of LED fixtures ≈	78,000	hours	
* Assumed each LED fixture requires two hours of service over its lifetime ≈		$150	
* Levelized Cost of Services (LCOS) includes the Environmental Improvement Rider, Fuel Cost Charge, Resource Adjustment, Interim Rate Adjustment, and State Tax	LCOS ≈	0.034	$/kWh
* Inquire with local electricity provider about energy efficient roadway lighting rebates	Rebate =	$0.00000	/kWh decrease/fixture

Inputs:

	Quantity of Fixtures to Replace		Fixture Purchase & Install Cost
HID Lamp Power	HPS Ornamental	MV Ornamental	LED Ornamental
50W			$220
70W			$264
100W			$330
150W	17		$440
175W			$495
200W	74		$550
250W	260		$660
400W			$990
700W			$1,650
750W			$1,760
1000W			$2,310

City's Initial Costs for LED Fixtures		City's Annual Costs for LED Fixtures	
20W LED Ornamental	$0	20W LED Ornamental	$0
28W LED Ornamental	$0	28W LED Ornamental	$0
40W LED Ornamental	$0	40W LED Ornamental	$0
60W LED Ornamental	$7,480	60W LED Ornamental	$449
70W LED Ornamental	$0	70W LED Ornamental	$0
80W LED Ornamental	$40,700	80W LED Ornamental	$2,520
100W LED Ornamental	$171,600	100W LED Ornamental	$10,697
160W LED Ornamental	$0	160W LED Ornamental	$0
280W LED Ornamental	$0	280W LED Ornamental	$0
300W LED Ornamental	$0	300W LED Ornamental	$0
400W LED Ornamental	$0	400W LED Ornamental	$0
City's Total Initial Cost	$219,780	City's Total Annual Cost	$13,666

Rate 3 with HID Fixtures → Rate 3 with LED Fixtures

* Assumed HID roadway replaced by LED fixtures that consume 40% as much power:	0.4	
* Assumed operating time is on 1/2 hr. after sunset and off 1/2 hr. before sunrise ≈	3550	hrs/yr
* Assumed avg. purchase cost for new LED fixtures per Watt of energy consumed ≈	$5.50	/W
* Assumed each LED fixture requires two hours of service over its lifetime ≈	$200	
* Levelized Cost of Services (LCOS) includes the Environmental Improvement Rider, Fuel Cost Charge, Resource Adjustment, Interim Rate Adjustment, and State Tax — LCOS ≈	0.034	$/kWh
* Inquire with local electricity provider about energy efficient roadway lighting rebates — Rebate =	$0.00000	/kWh decrease/fixture

Rates:

Customer Meter Charge	$8.65	/meter/month
Energy Charge	$0.04589	/kWh

Inputs:

Number of Meters	16	
Power of 250W HPS Fixtures	302	W
Quantity of 250W HPS Fixtures	264	
Power of LED Replacement Fixtures	121	W
LED Fixture Purchase Cost	$664.40	
LED Fixture Installation Cost	$110	
LED Fixture Life Expectancy	78,000	hours

City's Annual Costs for Each Type of Operating Expense

Annual Energy Costs*	$9,045	*Includes LCOS
Annual Maintenance Costs	$2,403	
Annual Metering Costs	$1,661	
City's Total Annual Cost	$13,109	
City's Total Initial Cost	$204,442	

City's Total Initial LED Roadway Lighting Cost ≈ $2,827,213
City's Total Annual LED Roadway Lighting Cost ≈ $53,572

Overall Simple Payback Period (SPP)		
Total Initial Cost	$2,827,213	
Annual Cost Savings	$280,281	
Overall Net Present Worth (NPW) and Life Cycle Cost (LCC) Analysis		
Assumed discount rate	0.04	
LED Fixture Lifetime (analysis period)	22	years
USPW	14.4	years

Rate 2 → LED Rate 3 Simple Payback Period (SPP)		
Total Initial Cost	$219,780	
Annual Cost Savings	$28,401	
Rate 2 → Rate 3 Net Present Worth (NPW) and Life Cycle Cost (LCC) Analysis		
Assumed discount rate	0.04	
LED Fixture Lifetime (analysis period)	22	years
USPW	14.4	years

Rate 1 → LED Rate 3 Simple Payback Period (SPP)		
Total Initial Cost	$2,402,991	
Annual Cost Savings	$235,319	
SPP	**10.2**	**years**
Rate 1 → Rate 3 Net Present Worth (NPW) and Life Cycle Cost (LCC) Analysis		
Assumed discount rate	0.04	
LED Fixture Lifetime (analysis period)	22	years
USPW	14.4	years
NPW		**$994,891**
22 yr LCC with HID Fixtures		**$3,784,821**
22 yr LCC with LED Fixtures		**$2,789,930**

Rate 3 →LED Rate 3 Simple Payback Period (SPP)		
Total Initial Cost	$204,442	
Annual Cost Savings	$16,561	
SPP	**12.3**	**years**
Rate 3 →LED Rate 3 Net Present Worth (NPW) and Life Cycle Cost (LCC) Analysis		
Assumed discount rate	0.04	
LED Fixture Lifetime (analysis period)	22	years
USPW	14.4	years
NPW		**$34,694**
22 yr LCC with HID Fixtures		**$428,416**
22 yr LCC with LED Fixtures		**$393,722**

APPENDIX C: NIGHTTIME PHOTOGRAPHS OF OPERATIONAL LED ROADWAY LUMINAIRES