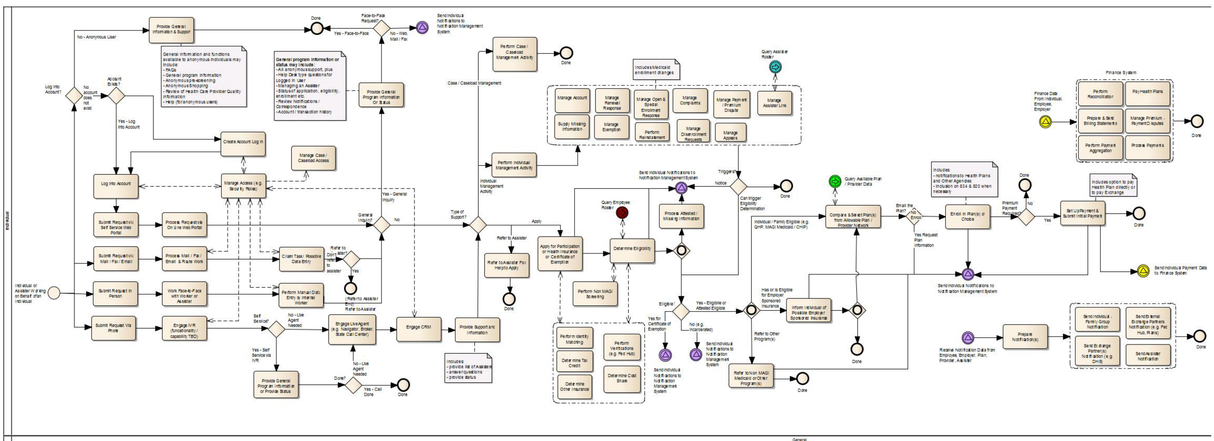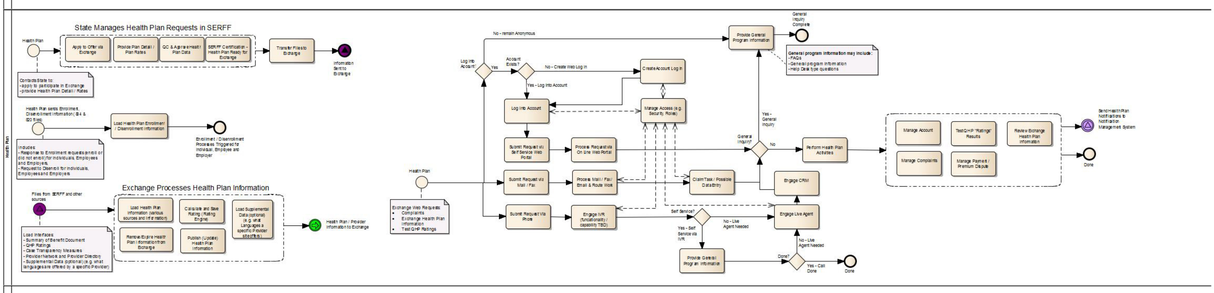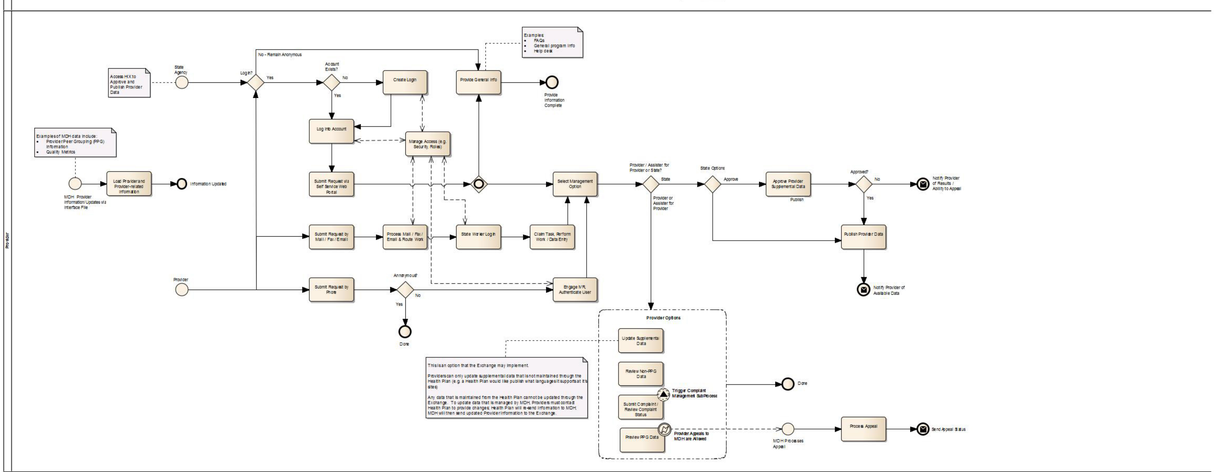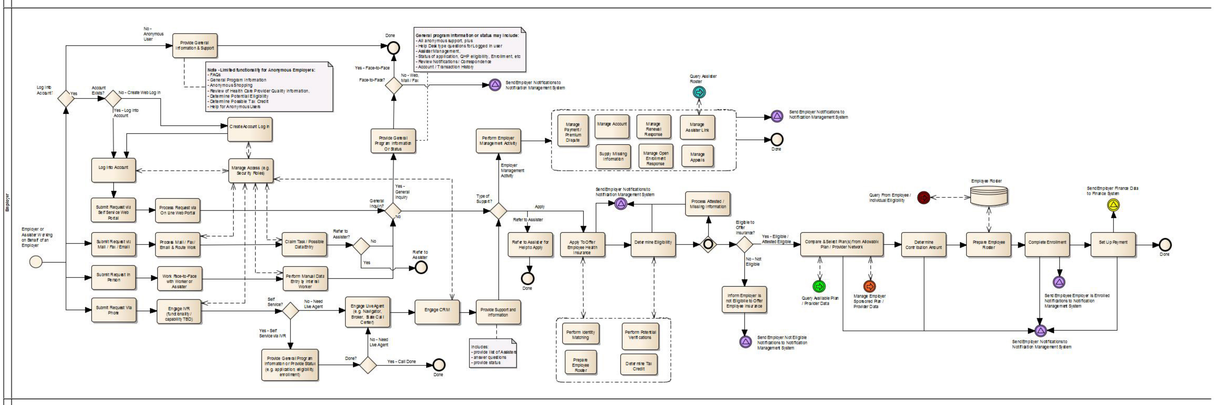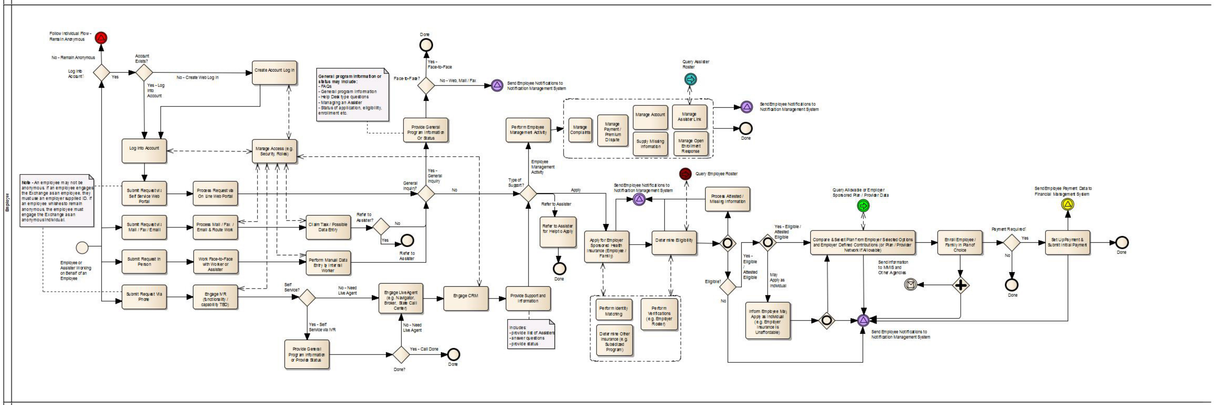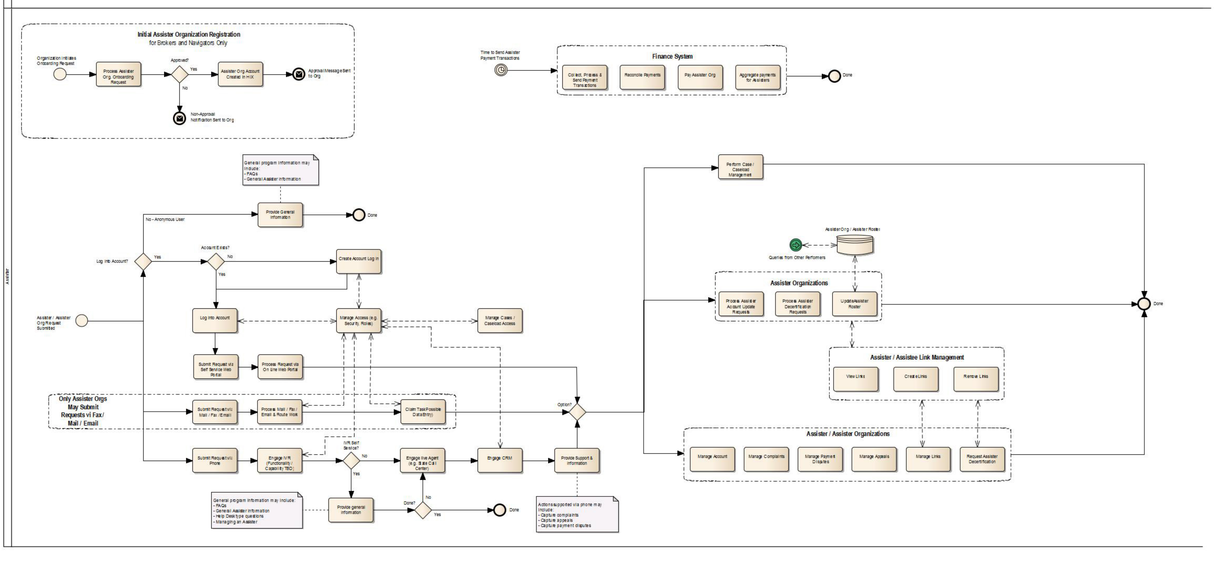HIX Enterprise End - to - End Model