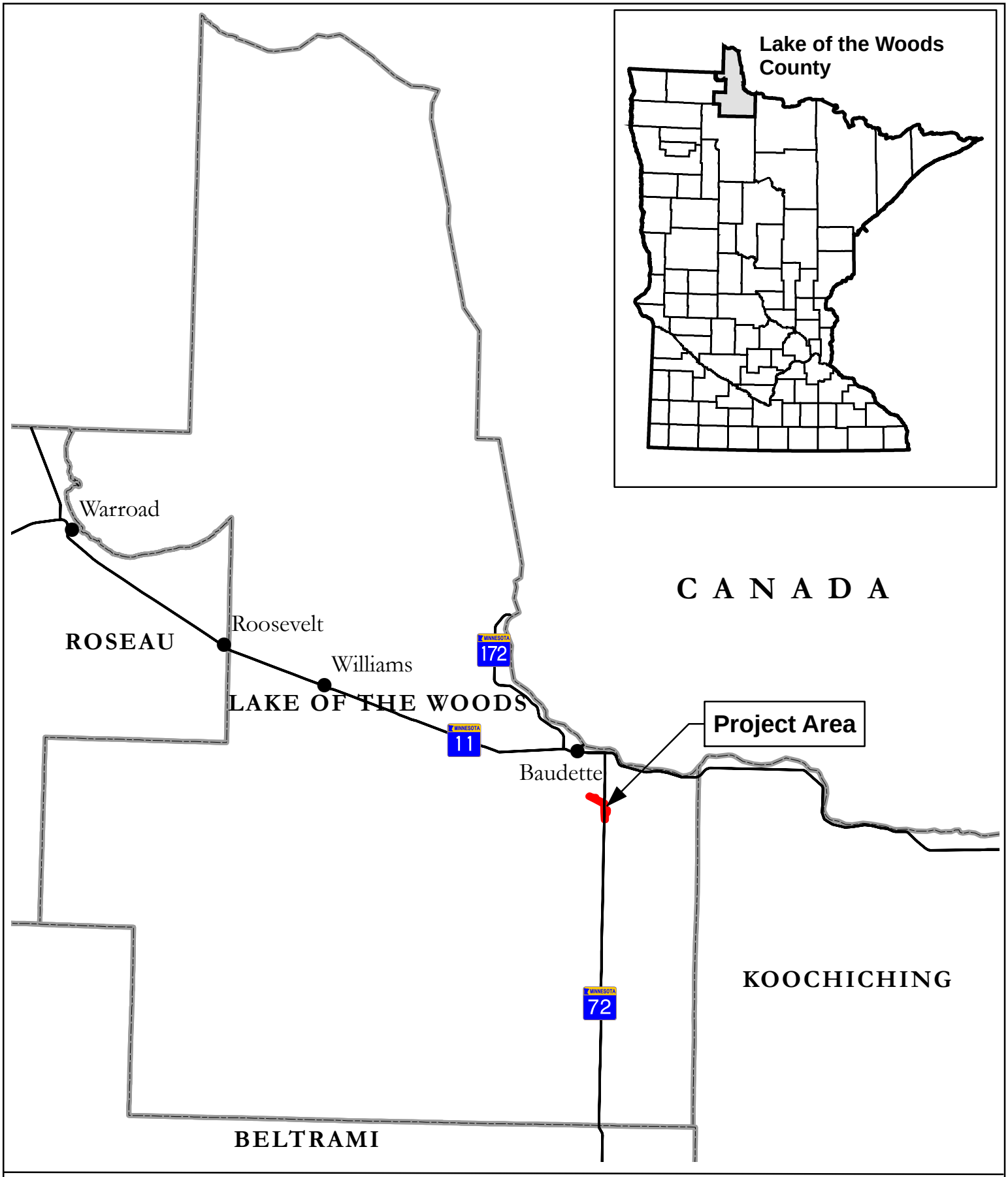


Miles
0 4 8

N

Appendix B.1 - Site Vicinity Map
Lund Substation and 230 kV Tap Project
Minnkota Power Cooperative, Inc
Lake of the Woods County, MN

Minnkota Power
MPC COOPERATIVE, INC.
Your Touchstone Energy® Partner

HDR

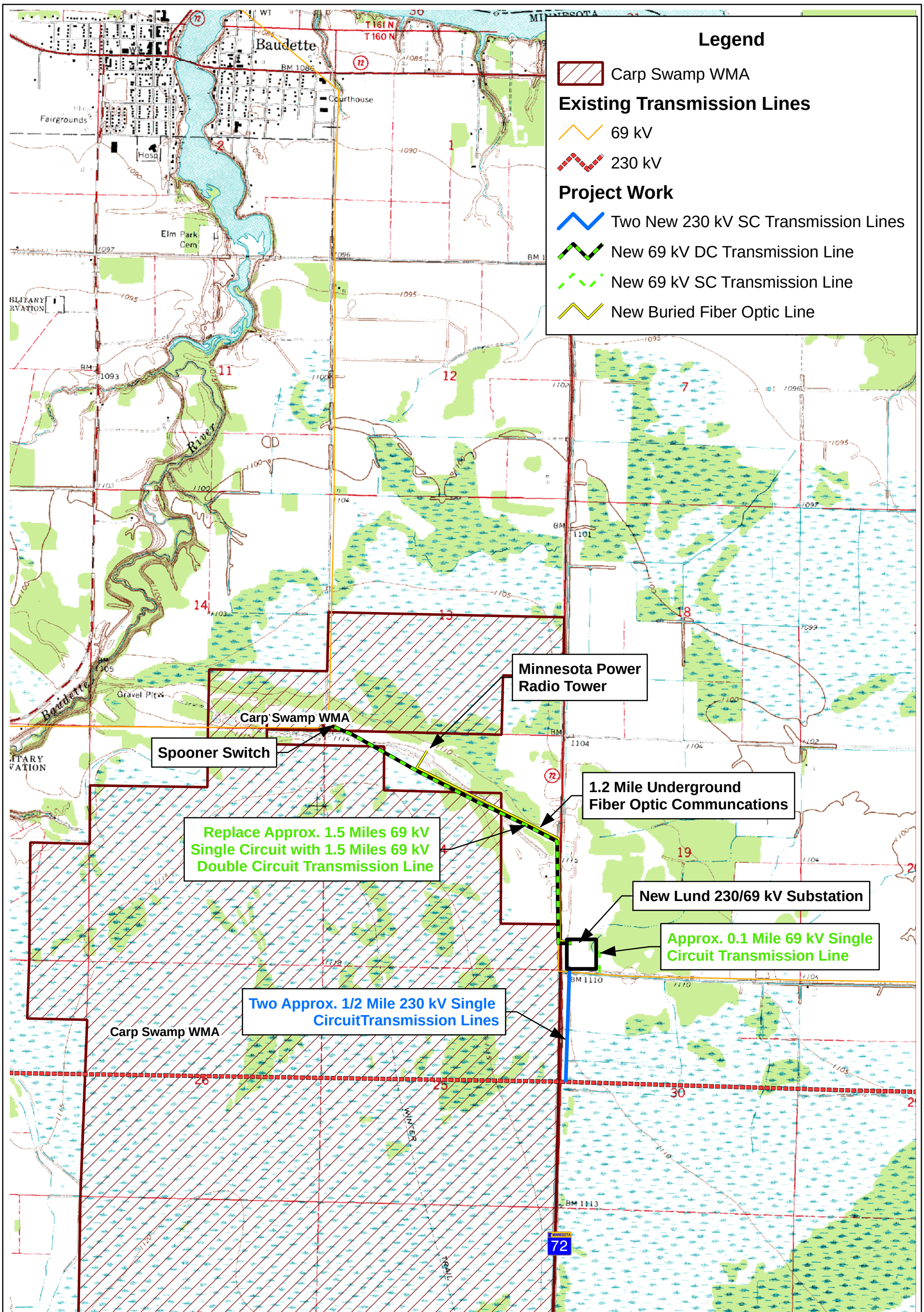


Feet

0 1,000 2,000 4,000

N

Appendix B.2 - Project Location Map
Lund Substation and 230 kV Tap Project
Minnkota Power Cooperative, Inc
Lake of the Woods County, MN

Minnkota Power
MPC COOPERATIVE, INC.
Your Touchstone Energy® Partner

HDR

# Appendix B.3

Option 1
Build ½ Mile Triple Circuit 69 kV
and 1 ½ Miles Double Circuit 69 kV.
Estimated Cost = $380,000.

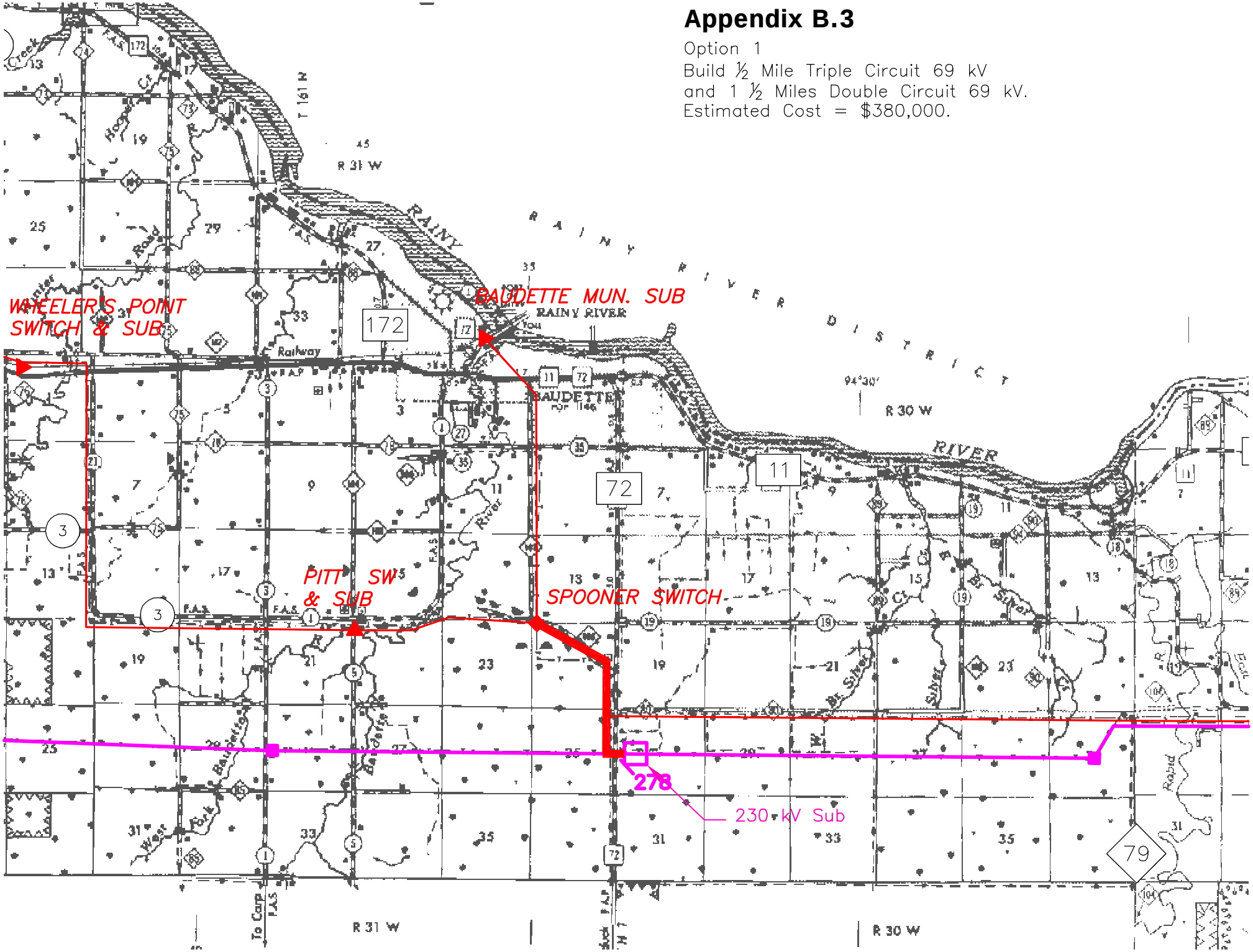

# Appendix B.4

Option 2
Build ½ Mile Single Circuit 230 kV
and 1 ½ Miles Double Circuit 69 kV.
Estimated Cost = $450,000.

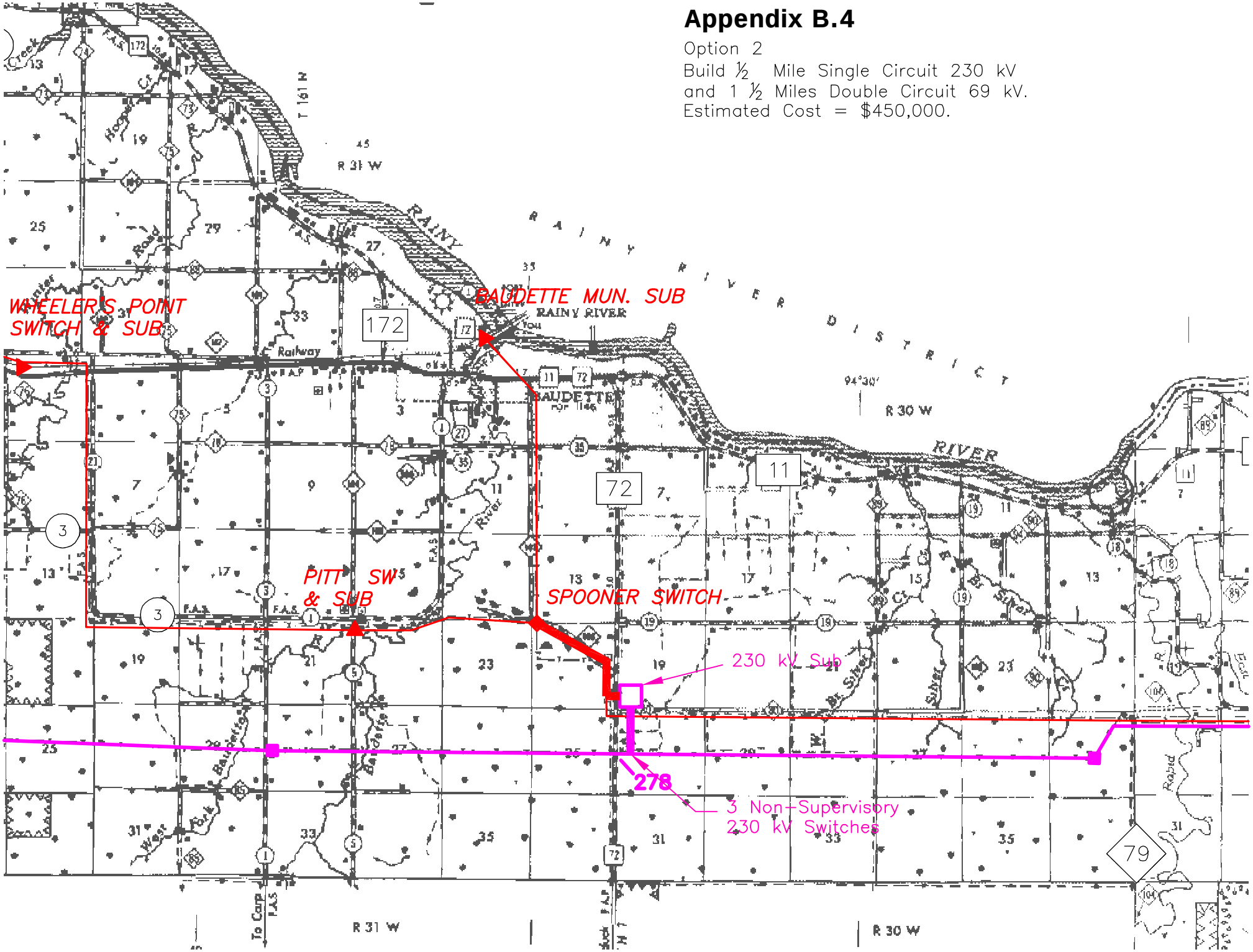

# Appendix B.5

Option 3
Build ½ Mile Double Circuit 230 kV
and 1 ½ Miles Double Circuit 69 kV.
Estimated Cost = $500,000.

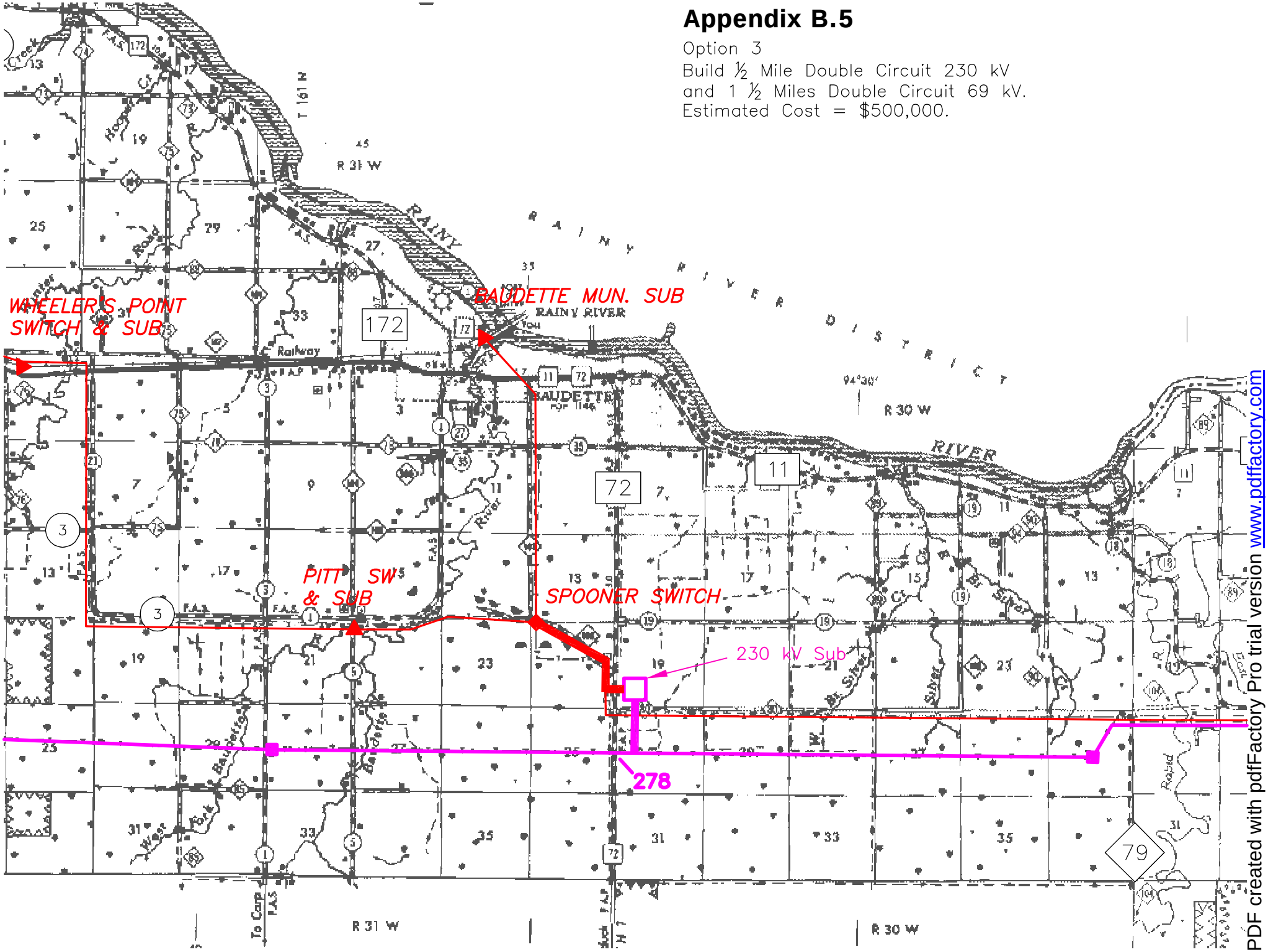


PDF created with pdfFactory Pro trial version www.pdffactory.com

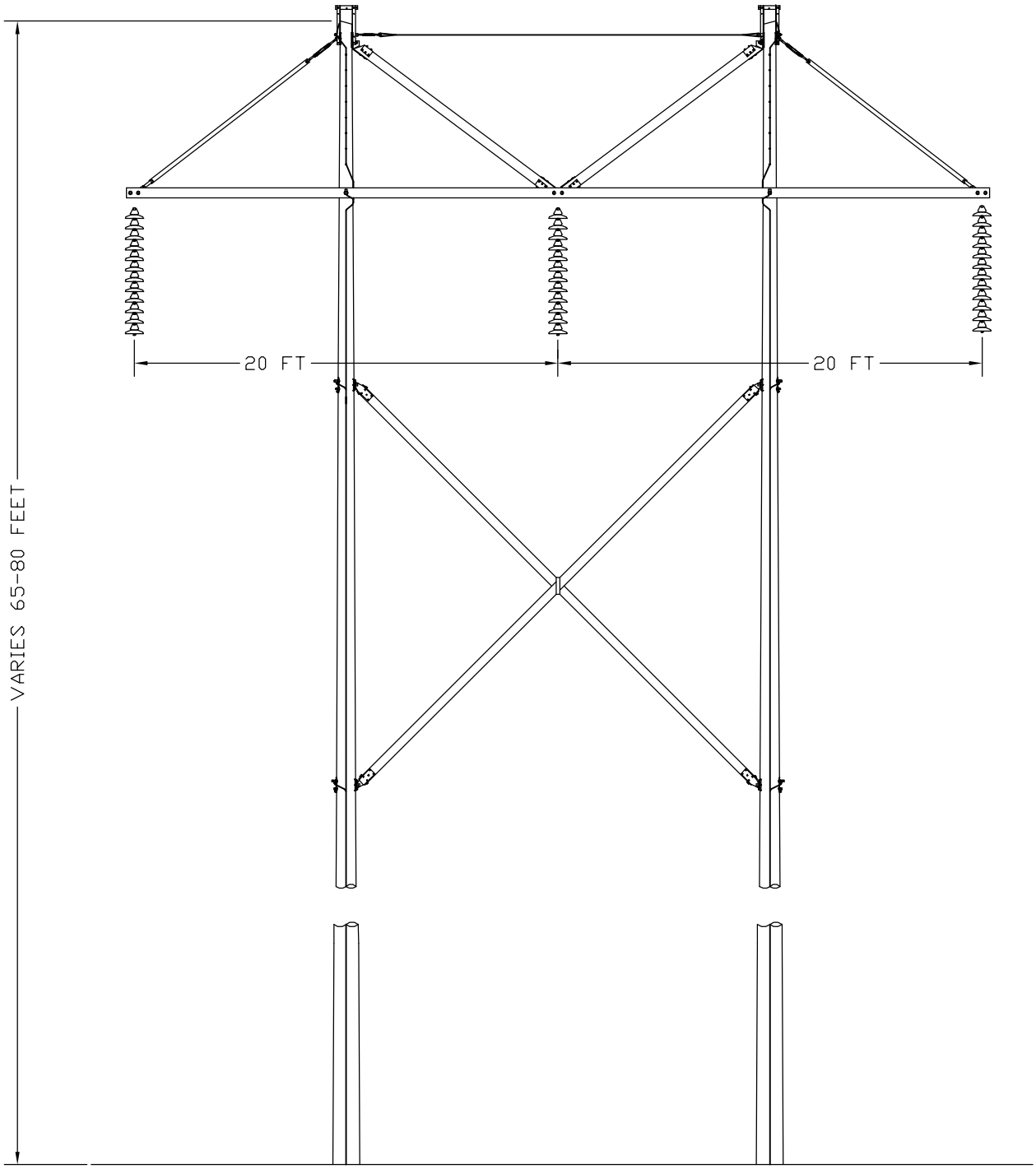


**PROPOSED 230KV TANGENT STRUCTURE FOR LUND SUBSTATION TAP LINE.**

**Appendix B.6**

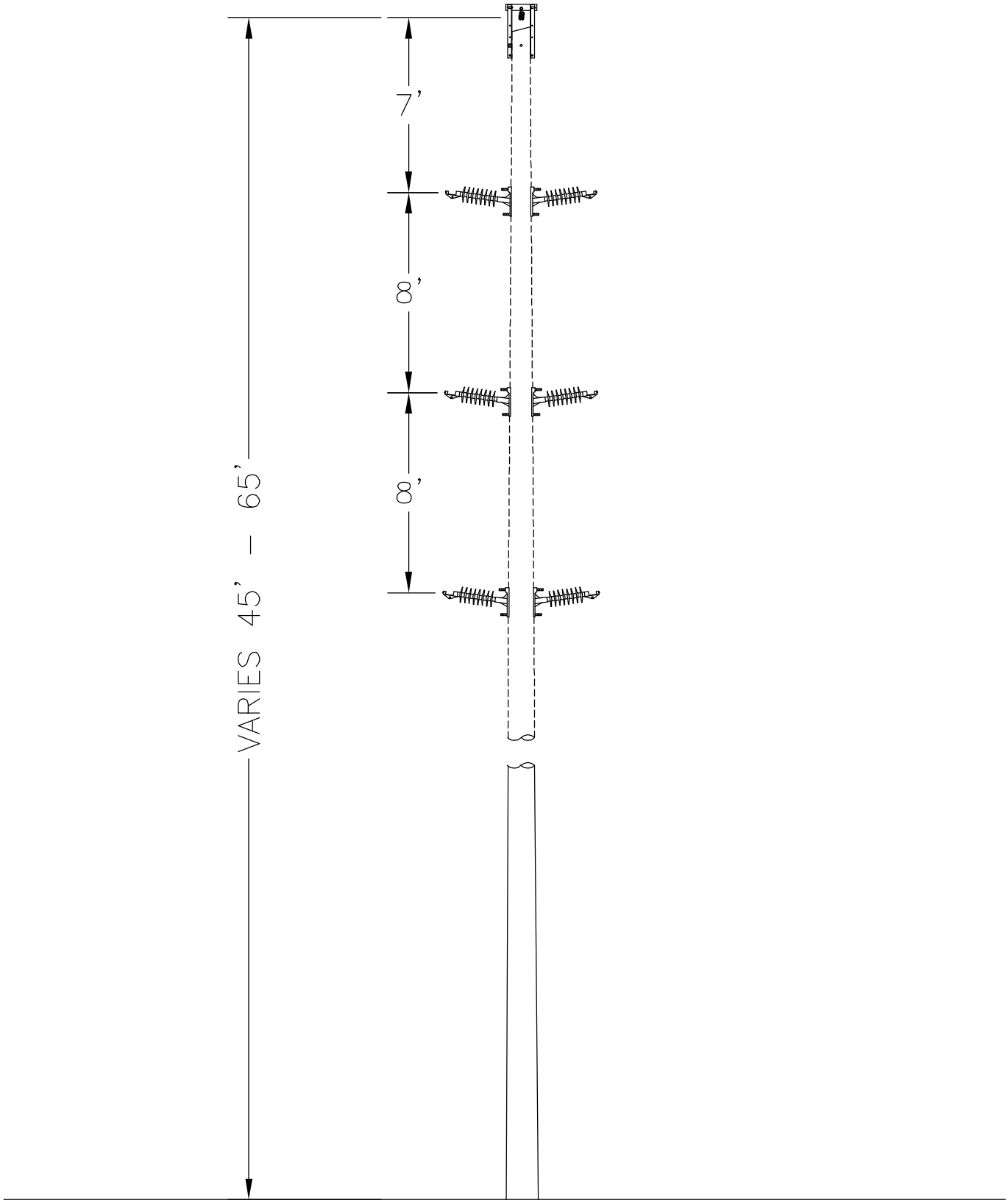


**PROPOSED DOUBLE CIRCUIT 69KV TANGENT STRUCTURE FOR LUND - SPOONER LINE**

**Appendix B.7**

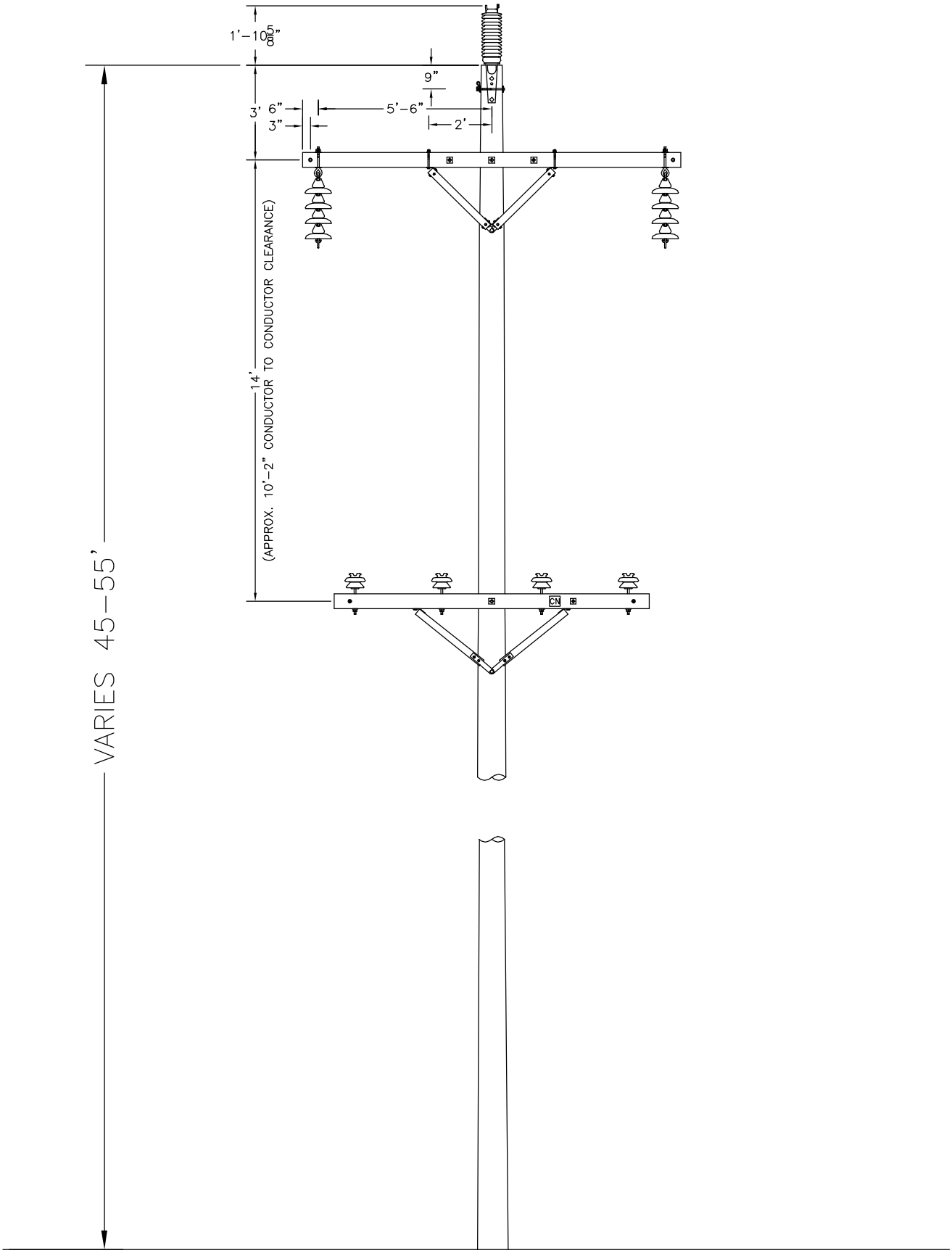


**PROPOSED 69KV TANGENT**
**STRUCTURE FOR LUND - BIRCHDALE LINE**

**Appendix B.8**

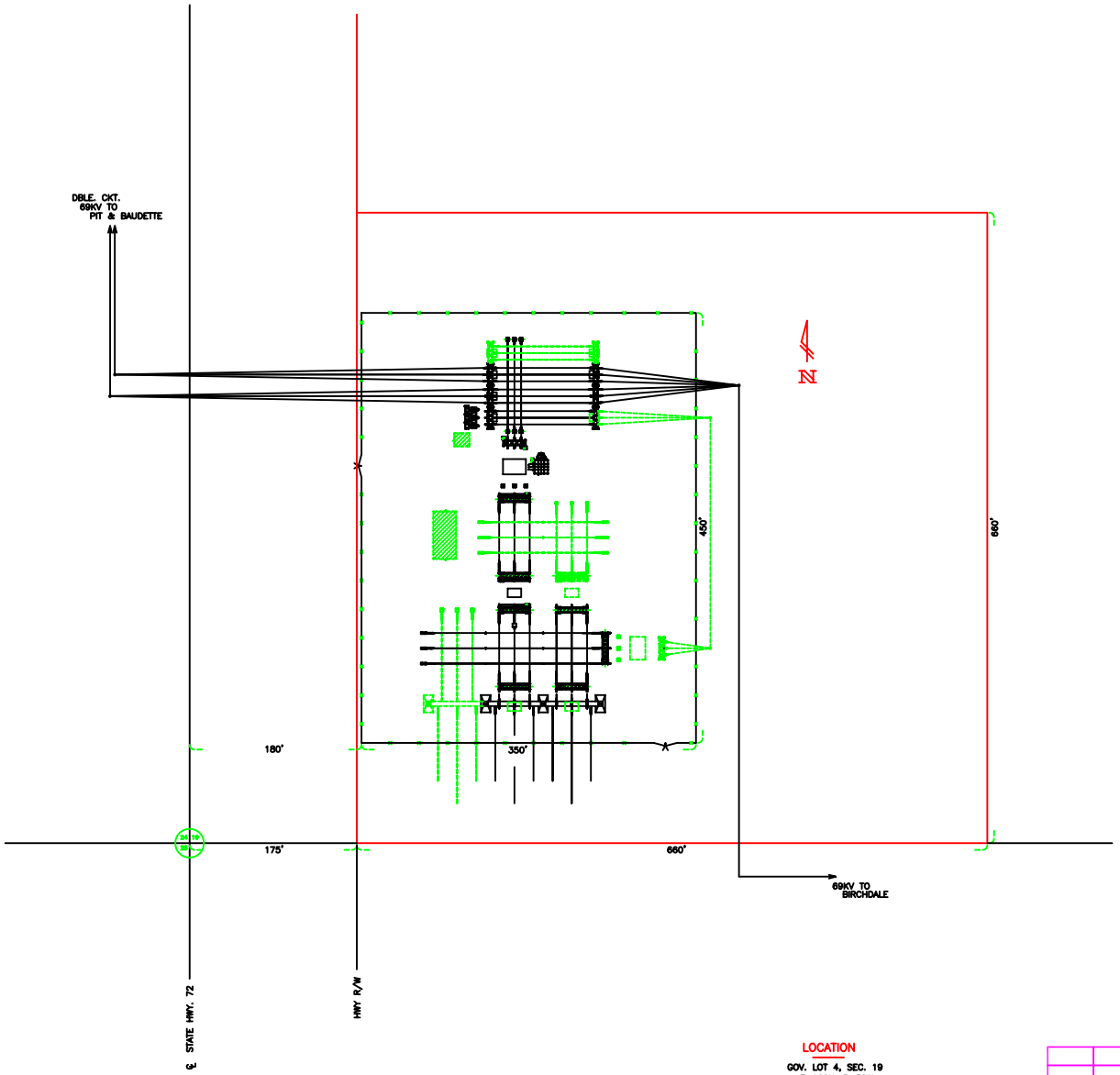


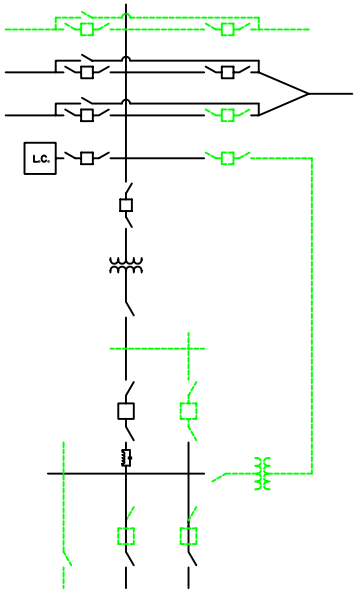


LOCATION
GOV. LOT 4, SEC. 19
T-160N, R-30W
LAKE OF THE WOODS COUNTY, MINNESOTA

# Appendix B.9

| | | | | | | |
|---|---|---|---|---|---|---|
| | | | MPC | LUND 230KV SUBSTATION<br>PLOT PLAN<br>[SITE 1] | | |
| | | | DRAWN | | | |
| | | | DATE 6/24/03 | MINNKOTA POWER COOPERATIVE INC.<br>GRAND FORKS, NORTH DAKOTA | | |
| DATE | REVISIONS | DIST. | APPROVED | SCALE 1"=60' | SHEET 1 OF 1 | DWG.NO. LU50-00 |

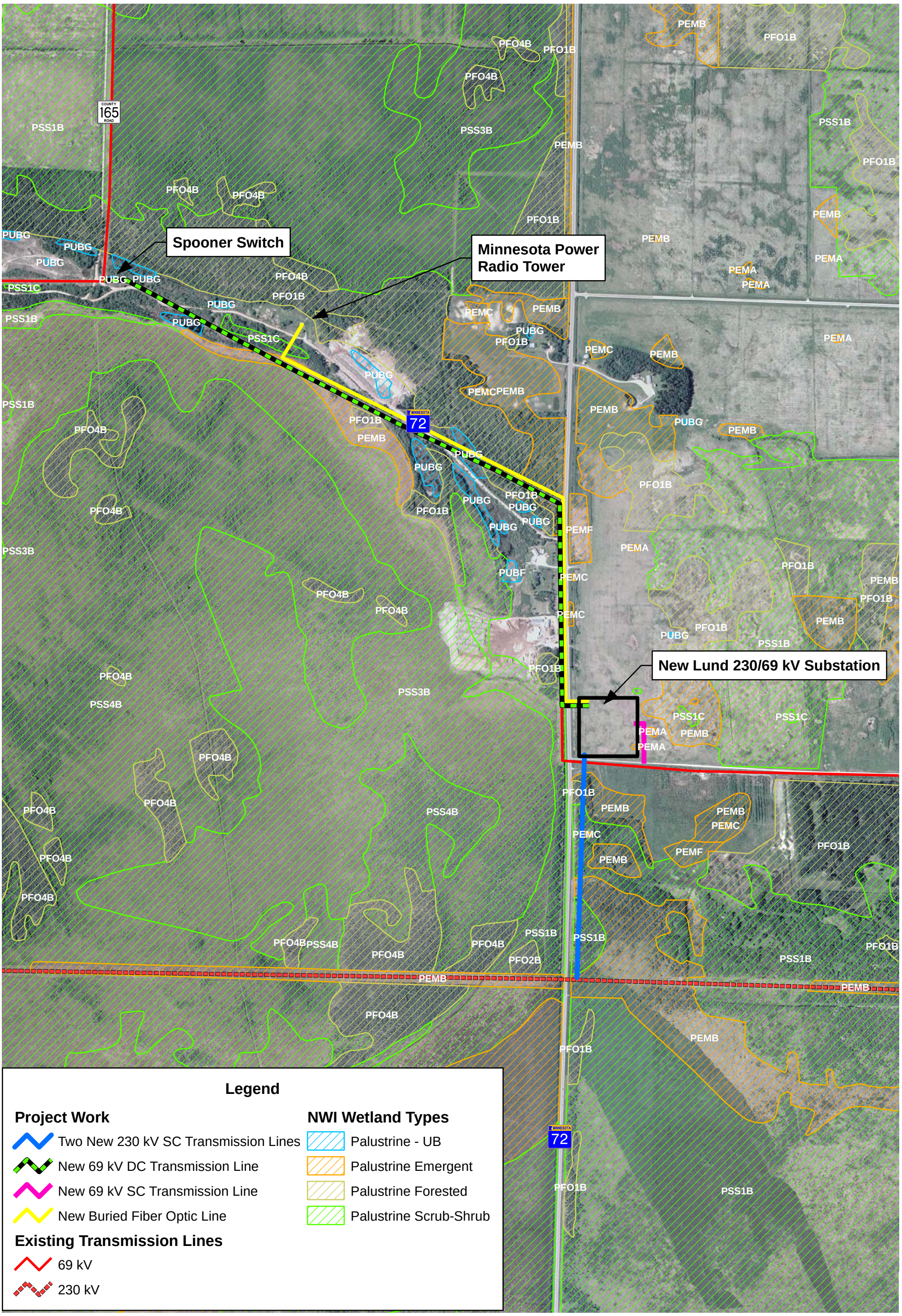


Feet
0 1,000 2,000

Figure B.10 - NWI Wetlands
Lund Substation and 230 kV Tap Project
MinNkota Power Cooperative, Inc
Lake of the Woods County, MN

Minnkota Power COOPERATIVE, INC.
Your Touchstone Energy® Partner

HDR

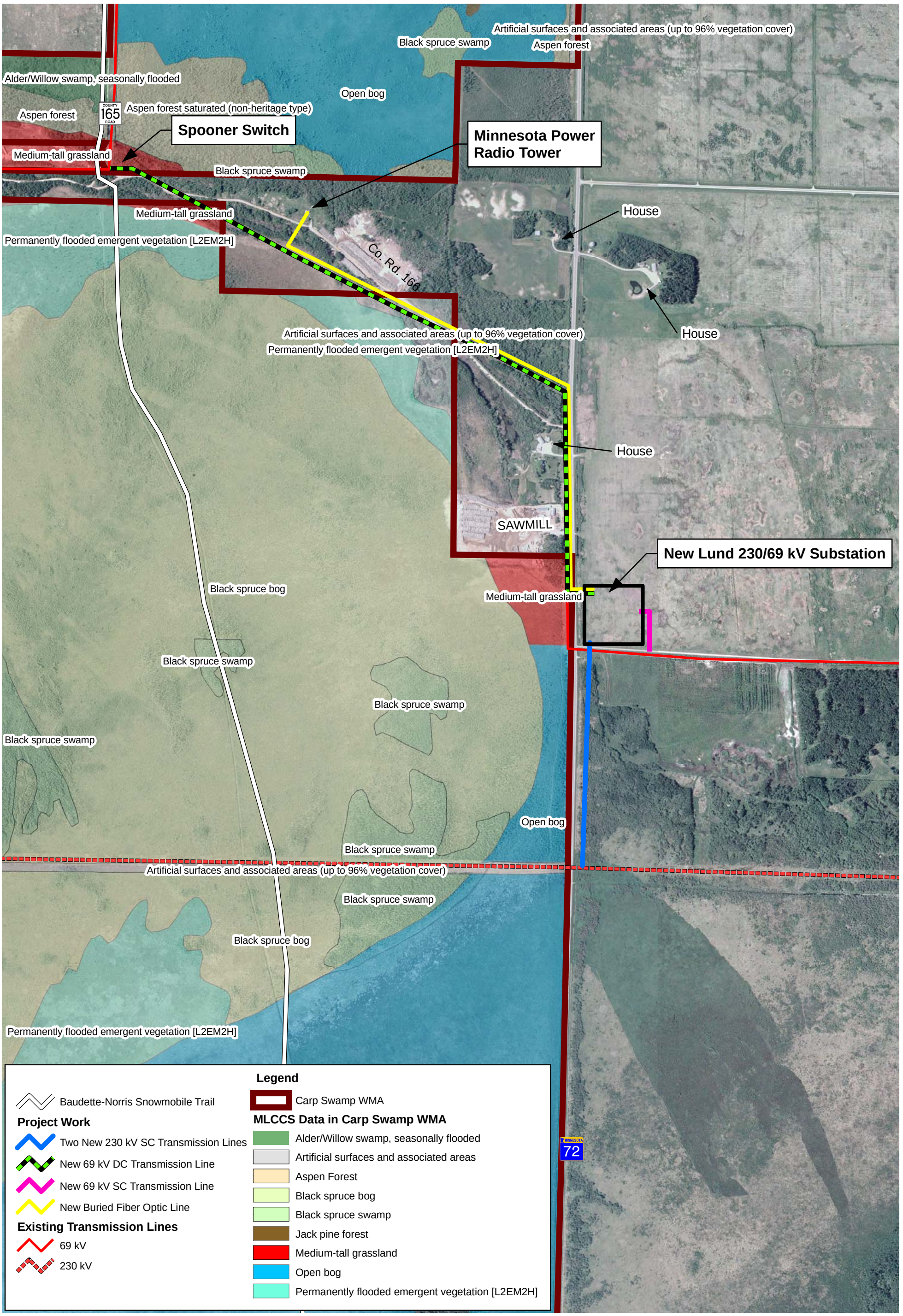


Feet

0 1,000 2,000

N

Figure B.11 - Adjacent Land Cover
Lund Substation and 230 kV Tap Project
Minnkota Power Cooperative, Inc
Lake of the Woods County, MN

Minnkota Power COOPERATIVE, INC.
Your Touchstone Energy® Partner

HDR

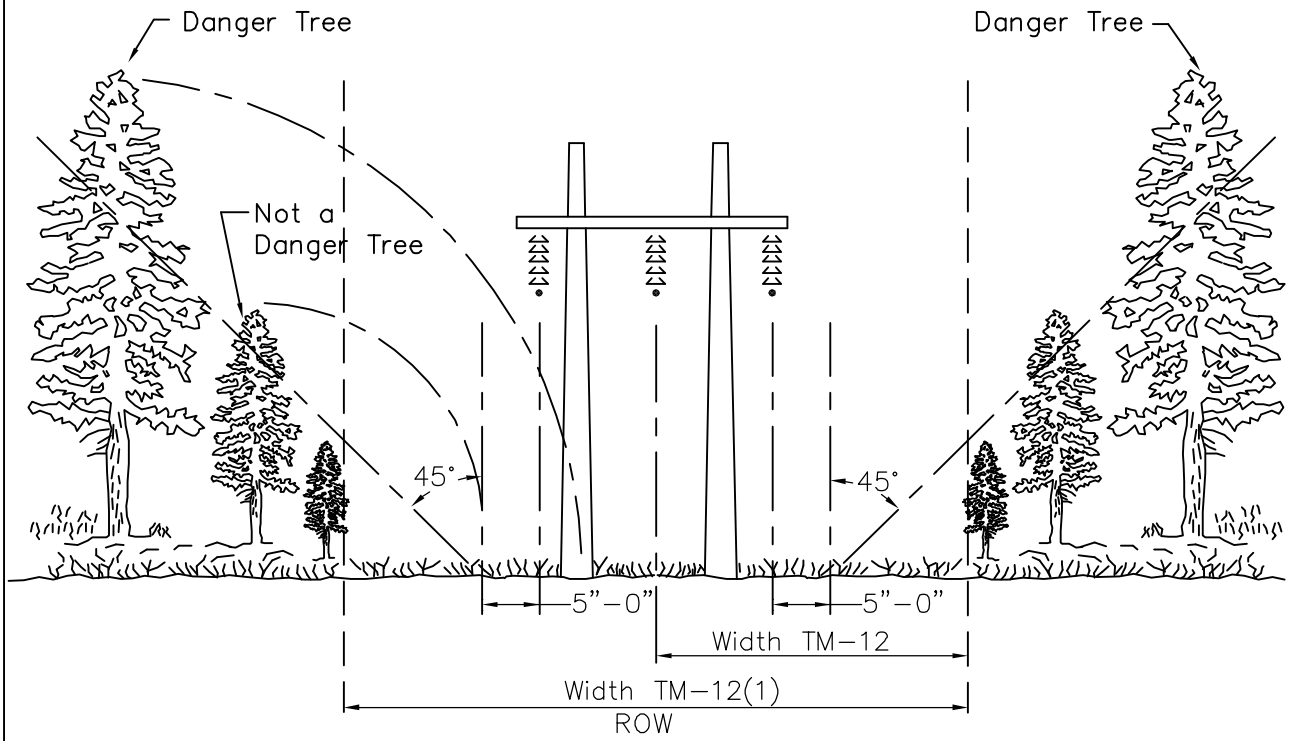


NOTES:

1. Engineer will designate all danger trees which shall be removed or topped at option of contractor. In approximately level terrain, trees which would reach within 5 feet of a point underneath the outside conductor in falling are examples of danger trees.

2. As directed by the engineer, portions of the right–of–way (ROW) must be cut so that stumps will not prevent the passage of tractor and trucks along the ROW.

3. The unit for clearing one–half of the ROW is "WIDTH TM–12."

4. The unit for clearing the full ROW is "WIDTH TM–12(1)."

5. The unit for clearing danger trees is "TM–13."

TRANSMISSION ROW CLEARING

RIGHT–OF–WAY CLEARING GUIDE

| NO. | REVISION | DATE | | | TM–12,–12(1),–13 |
|---|---|---|---|---|---|

**Appendix B.12**