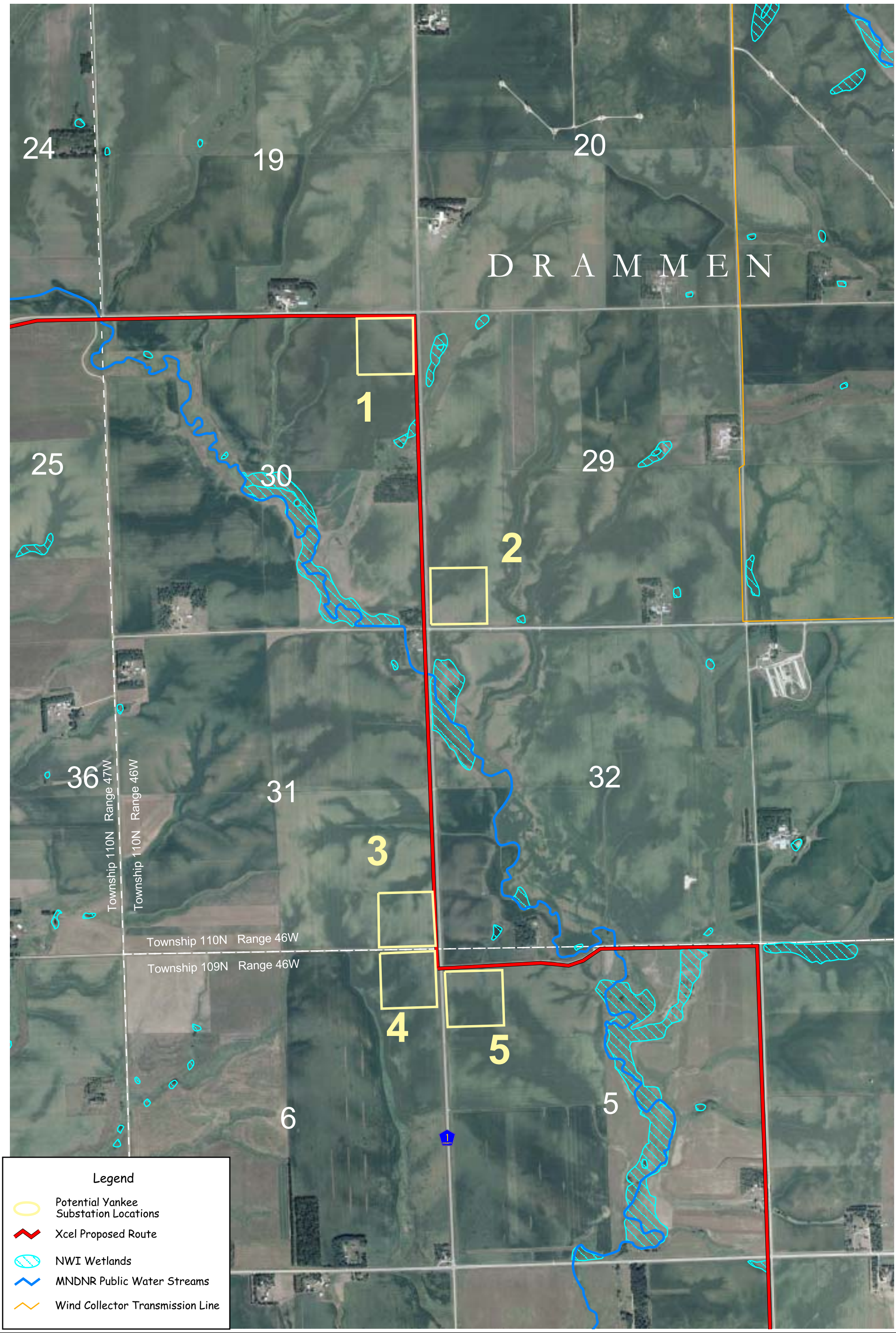

N

0 750 1500 2250 Feet

1" = 1500 feet

Buffalo Ridge to White
115 kV Transmission Line
Xcel Energy
Windfarm Transmission Improvement Projects

APPENDIX E.1
SUBSTATION
LOCATION MAP

Xcel Energy
NORTHERN STATES POWER

July 2004

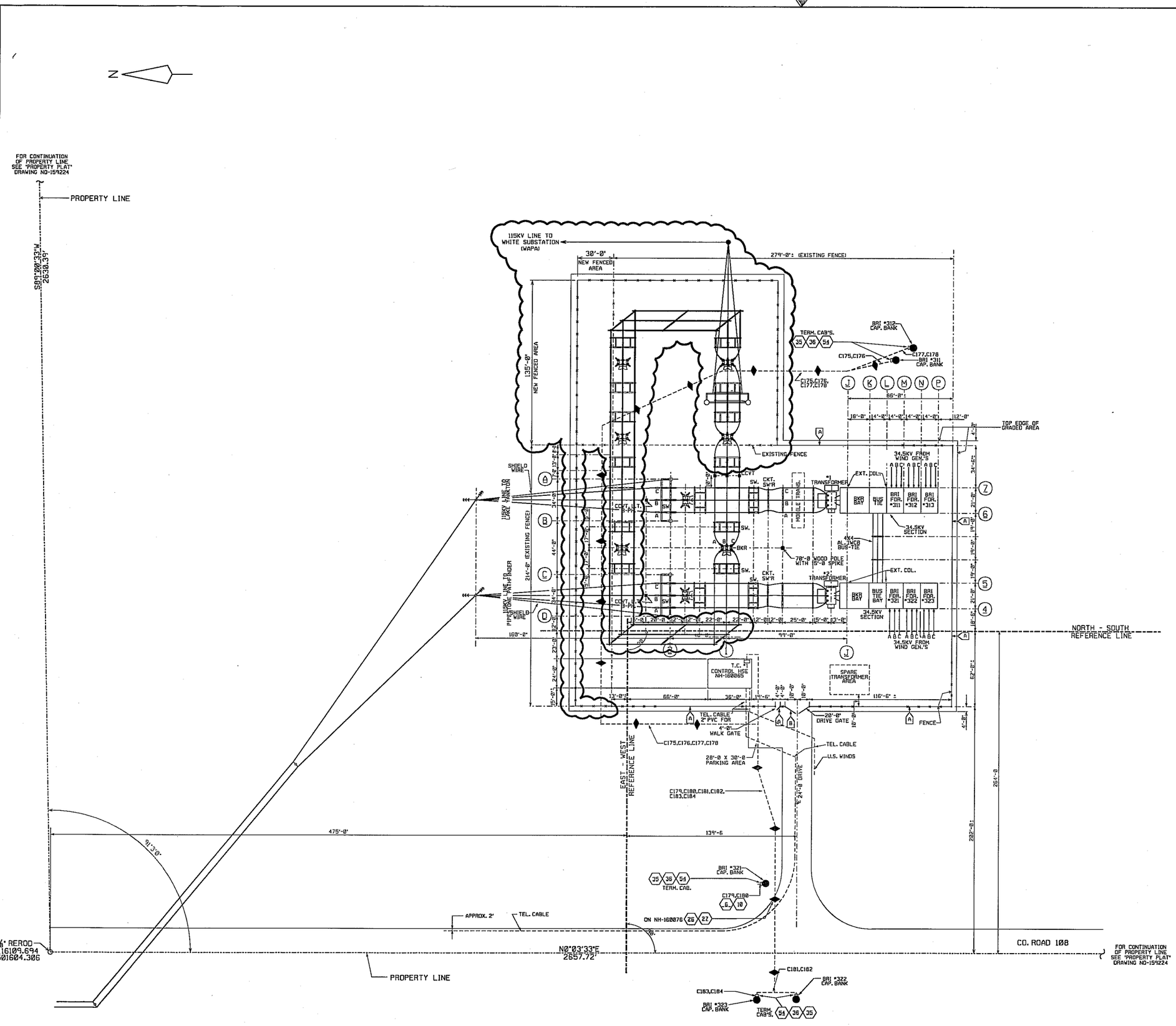

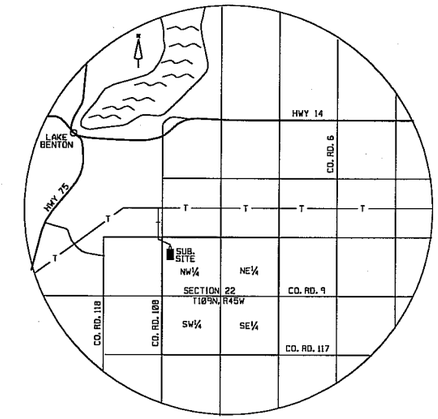

SITE PLAN

(NO SCALE)

GENERAL NOTES

1. LOCATION OF BENCH MARK FOR GRADE ELEVATION IS 12" SPIKE IN SOUTH FACE OF SECOND POWERPOLE EAST OF INTERSECTION. POLE HAS TRANSFORMER ON IT. SECTION 22 B.M. ELEVATION OF BENCH MARK IS 1992.21
2. SUBSTATION ROUGH GRADE ELEVATION VARIES
3. SUBSTATION AREA ENCLOSED BY FENCE AND EXTENDING 4'-0" OUTSIDE, SURFACED WITH A MINIMUM OF 4" OF CLEAN ¾" CRUSHED ROCK.
4. FENCE 1' - 8" HIGH, VERTICAL ARM BARBED WIRE TOP AND 6' - 8" HIGH STEEL CHAIN LINK FABRIC IN ACCORDANCE WITH N.S.P. ENG. & DES. STDS. EE 1.3781.
5. SEE STRUCTURAL STEEL DRAWINGS FOR LOAD REQUIREMENTS OF EXTERNAL AND INTERNAL STRAINS.
6. U.G. POWER DUCTS PASS UNDER FENCE MIDWAY BETWEEN FENCE POSTS AND, WHERE POSSIBLE, NOT LESS THAN 2'-6" BELOW GRADE.

LEGEND

1. A → INDICATES ONE SIGN, ORDERED BY FIELD AND MOUNTED ON THE FENCE AND WALK GATE FABRIC APPROXIMATELY 5'-6" FROM GRADE TO TOP OF SIGN. NSP STOCK #16-0892 "WARNING/KEEPOUT, HAZARDOUS VOLTAGE INSIDE CAN SHOCK, BURN, OR CAUSE DEATH".
2. B → INDICATES TWO SIGNS, "CAUTION-LIMITED OVERHEAD ELECTRICAL CLEARANCES WITHIN-ENTRY BY AUTHORIZED PERSONNEL ONLY", NSP STOCK NO. 16-0094, ORDERED BY FIELD AND MOUNTED EACH SIDE OF GATE FABRIC, BACK TO BACK, APPROXIMATELY 5'-6" FROM GRADE TO TOP OF SIGN, AND LOCATED ON THE LEFT PANEL, OR DRIVER'S SIDE, OF DOUBLE GATE WHEN ENTERING SUBSTATION.
3. C → INDICATES "CAUTION-BURIED CABLE" SIGNS, NSP STOCK NO. 16-0088, ORDERED BY FIELD AND MOUNTED EACH SIDE OF FENCE FABRIC, BACK TO BACK, APPROXIMATELY 3'-6" FROM GRADE TO TOP OF SIGNS.
4. M-INDICATES CONCRETE MARKERS FOR DIRECT BURIED CABLE RUNS. E & D STD. EE 1.0501, ORDERED BY FIELD.
5. INDICATES CHANNEL POST FOR MARKING UNDERGROUND CABLE RUN EXTENDING OUTSIDE SUBSTATION FENCE. E AND D STD. ED 4.05.05

SPECIAL NOTES FOR MOBILE TRANSFORMER

1. MOBILE TRANSFORMER TO BE PARKED IN POSITION AS SHOWN.
2. HIGH VOLTAGE LEADS CONNECTED OVERHEAD WITH HOT LINE CLAMPS TO TRANSFORMER LEADS.
3. LOW VOLTAGE LEADS CONNECTED WHERE SHOWN ON ELECTRICAL LAYOUT SO THAT TRANSFORMER CURRENT TRANSFORMERS AND CIRCUIT BREAKER OR LOAD INTERRUPTER SWITCH REMAIN IN THE CIRCUIT.
4. ENTRANCE TO CONTROL HOUSE FOR MOBILE TRANSFORMER CONTROL CABLE SHOWN ON CONTROL HOUSE DRAWING NE-160065.__

DRAWING REFERENCE

PROPERTY PLAT	ND-159224___
CONTOUR AND GRADING LAYOUT	NH-160249___
115KV ELECTRICAL LAYOUT	NE-159999___
34.5KV ELECTRICAL LAYOUT	ND-159997___
CIRCUIT DIAGRAM	ND-159228___
GROUNDING LAYOUT	NE-160071__
STEEL STAND LOCATION PLAN	NE-160073___

REVISIONS

Q ADDED CABLES C175-C184 TERM. CABINETS AND CABLE MARKERS AS SHOWN.

DESIGNER: DBK_
PHONE NO. 330-6645
DATE: ___
E-96661
CHK'D BY: DBK_
PHONE NO.
APPD & CERT:
PHONE NO. ___
FILMED: ___

E REVISED PER FIELD MARKED PRINTS

DWN: MGP
DATE: 8-13-01.
CHK'D: __
APP'D:
KRIS_PHILLIPS
PH NO.: 215-835-1338
FILMED: ___

THIS MAP/DOCUMENT IS A TOOL TO ASSIST EMPLOYEES IN THE PERFORMANCE OF THEIR JOBS. YOUR PERSONAL SAFETY IS PROVIDED FOR BY USING SAFETY PRACTICES, PROCEDURES AND EQUIPMENT AS DESCRIBED IN THE SAFETY TRAINING PROGRAMS, MANUALS AND SPARS.

ENGINEERING DEPARTMENT MINNEAPOLIS, MN

BUFFALO RIDGE SUBSTATION
LOCATION PLAN

BRI

CER F	SIGNIFICANT NUMBER
1	6068
2	
3	
4	
5A	
5B	6210
6	

Xcel Energy

SCALE

NE-SK158970

REV NONE

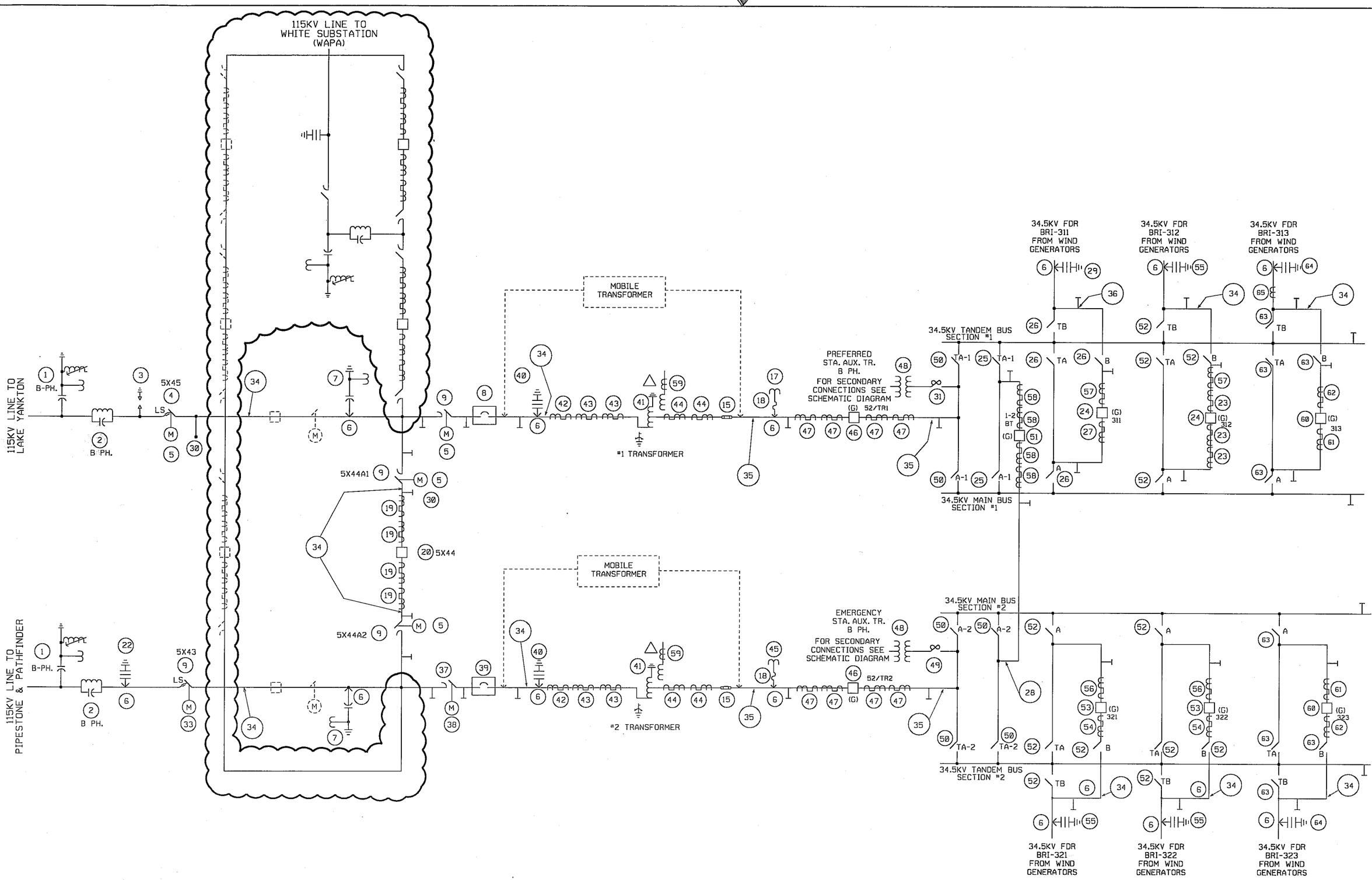

REVISIONS

A REPLACE #1 TRANS. ADD FDRS. BRI-312 FOR BUS SECT. #1, ADD #2 TRANS. FDRS. BRI-321 & 322, 115KV DISC. SW., MOT. MECH'S, AND BUS-TIE BKR., RELOCATE EXIST. #1 TRANS. BREAKER AS SHOWN. REMOVE GAP'S & EXIST. EMER. STA. AUX.
DESIGNER: DAK
PHONE NO. 330-6645
DATE: 3-24-95
E-96AB02
CHK'D BY: RLH
PHONE NO. 330-7661
APPD & CERT:
S. MCNELLY
3-24-95
PE 18545
PHONE NO. 330-6904
FILMED: 3-25-95

B ADD FDRS BRI-313 AND BRI-323 WITH ASSOC. EQUIPMENT AS OUTLINED ON SHTS 1 & 2
DESIGNER: MAM
PHONE NO. 330-6440
DATE: 2-16-98
E-96AE11
CHK'D BY: RLH
PHONE NO.
APPD & CERT:
C. BOATSWAIN
PHONE NO. 330-5880
S.J. McNELLY
2-20-98
P.E. 18545
FILMED: 3-5-98

C ADD CT'S TO BRI-313 AS OUTLINED ON SHTS 1 & 2
DESIGNER: des
PHONE NO. 330-6440
DATE:
E-96AE11
CHK'D BY: RLH
PHONE NO. 330-7661
APPD & CERT:
S. MCNELLY
PE18545
8-3-98
P.E. 18545
FILMED: 8-7-98

D FINAL FIELD REVISION.
REMOVE ITEM #16 FROM BRI-311.
DWN: MAM
DATE: 8-20-99
CHK'D: DES
PROJ: 96AE11
APP'D D. SULLIVAN 8-20-99
FILMED:

E FINAL FIELD REVISIONS
DWN: WEL 10-28-98
CHK'D:
PROJ: 96AB06,96AE11
APP'D
FILMED:

BUS CAPACITY NOTE

BUS CURRENT CARRYING CAPACITIES ARE BASED ON A TEMPERATURE RISE OF 30°C. OVER A 40°C. AMBIENT AS SHOWN IN THE ENGINEERING AND DESIGN STANDARDS EE1.0340

DRAWING REFERENCE

CIRCUIT DIAGRAM, SH. 2 - LIST OF EQUIPMENT	NH-159228-2
METERING & RELAYING DIAGRAM	NF-158904
LOCATION PLAN	NF-158970
115KV ELECTRICAL LAYOUT - SH. 1	NF-158999
34.5KV ELECTRICAL LAYOUT - SH. 1	NH-159957
SCHEMATIC DIAGRAM	NH-158959

THIS MAP/DOCUMENT IS A TOOL TO ASSIST EMPLOYEES IN THE PERFORMANCE OF THEIR JOBS. YOUR PERSONAL SAFETY IS PROVIDED FOR BY USING SAFETY PRACTICES, PROCEDURES AND EQUIPMENT AS DESCRIBED IN THE SAFETY TRAINING PROGRAMS, MANUALS AND SPARS.

ENGINEERING DEPARTMENT MINNEAPOLIS, MN

BUFFALO RIDGE SUBSTATION
CIRCUIT DIAGRAM

BRI

Xcel Energy

SCALE NONE

NH-SK159228-1

REV

GRP	SIGNIFICANT NUMBER
1	6068
2	
3	
4	
5A	
5B	2200
6	

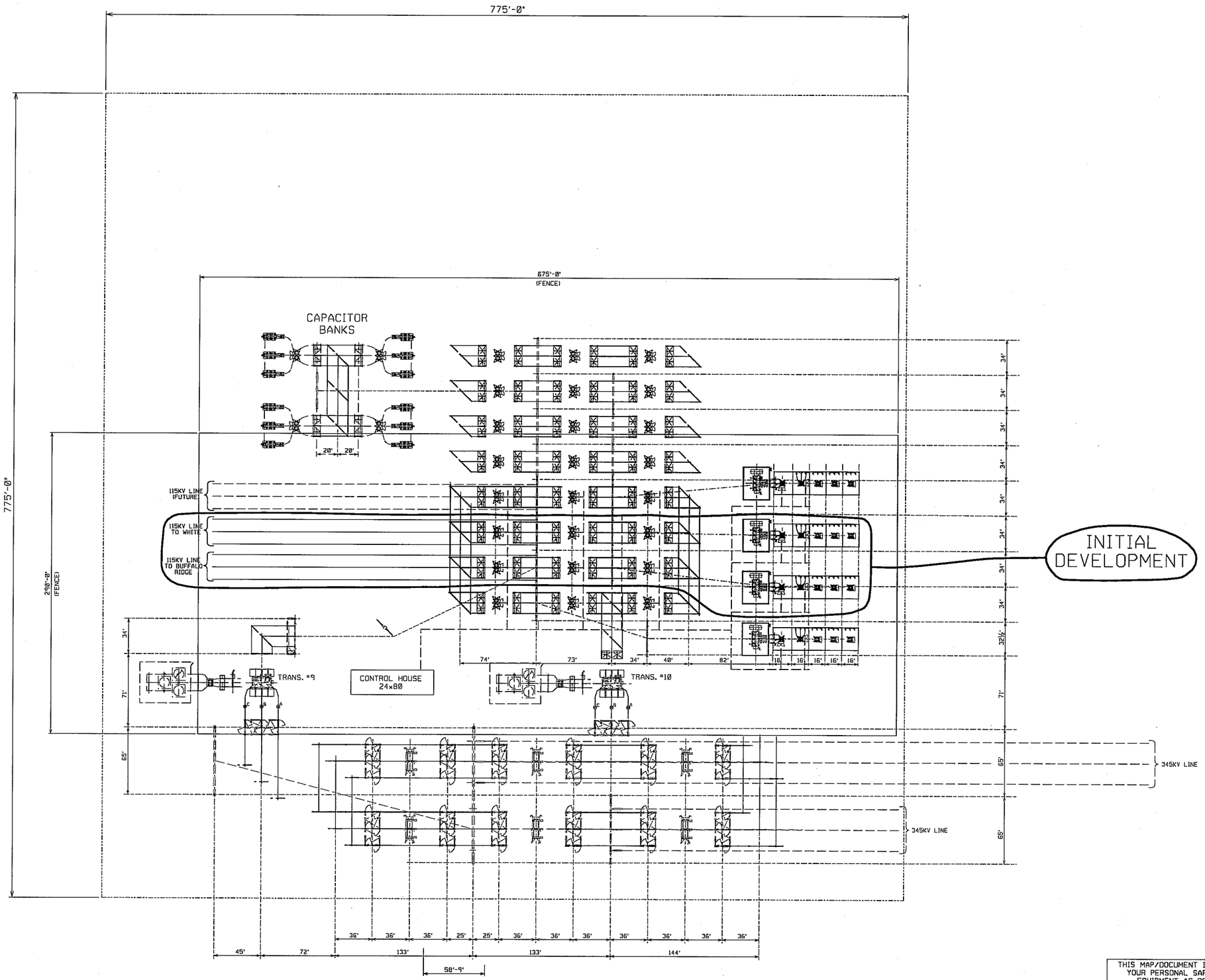

"PRELIMINARY"
"NOT FOR CONSTRUCTION"

NOTES:

APPROXIMATE LAND REQUIREMENTS:
40 ACRES FOR SITE
12 ACRES TO BE GRADED AND FENCED

THIS MAP/DOCUMENT IS A TOOL TO ASSIST EMPLOYEES IN THE PERFORMANCE OF THEIR JOBS. YOUR PERSONAL SAFETY IS PROVIDED FOR BY USING SAFETY PRACTICES, PROCEDURES AND EQUIPMENT AS DESCRIBED IN THE SAFETY TRAINING PROGRAMS, MANUALS AND SPARS.

ENGINEERING DEPARTMENT
MINNEAPOLIS, MN

YANKEE SUBSTATION
LOCATION PLAN

Xcel Energy

SCALE

NH-10319003-P2

REV

GRP	SIGNIFICANT NUMBER
1	
2	
3	
4	
5A	
5B	
6	

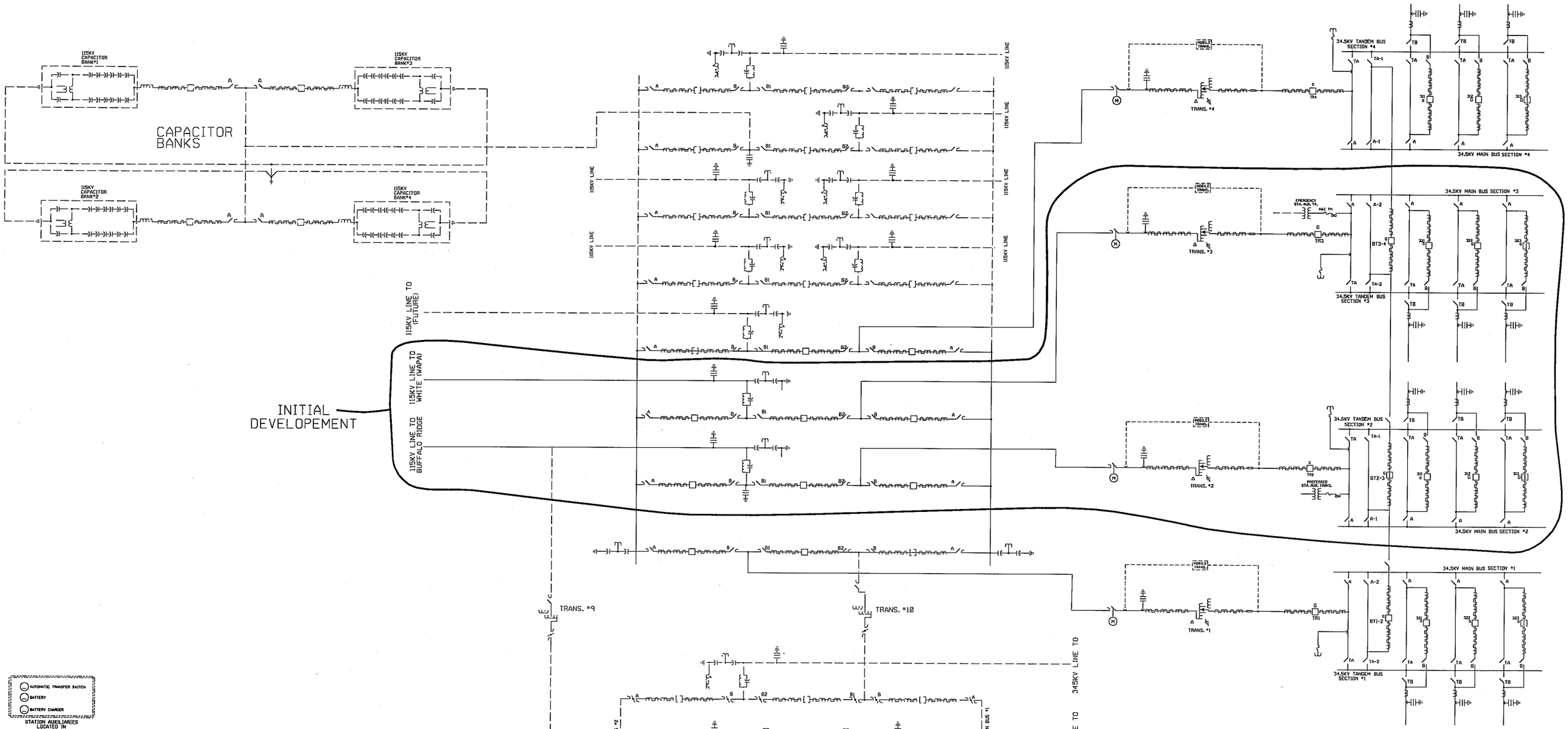

THIS MAP/DOCUMENT IS A TOOL TO ASSIST EMPLOYEES IN THE PERFORMANCE OF THEIR JOBS. YOUR PERSONAL SAFETY IS PROVIDED FOR BY USING SAFETY PRACTICES, PROCEDURES AND EQUIPMENT AS DESCRIBED IN THE SAFETY TRAINING PROGRAMS, MANUALS AND SPARS.

ENGINEERING DEPARTMENT MINNEAPOLIS, MN

YANKEE SUBSTATION
CIRCUIT DIAGRAM

Xcel Energy

SCALE

NH-10319003-P1

REV

SIGNIFICANT NUMBER