FOX LAKE 161KV

LOC #012 1229

EMERGENCY POWER-NONE

G.A. A-4582
F.P. M-1329
W.D. SEE INDEX

PROPOSED ONE LINE

- **RELAYING MODIFICATIONS NOT SHOWN**
- **OLD LAKEFIELD LINE MOVED**
- **NEW LAKEFIELD LINE TO TERMINATE AT PREVIOUS LAKEFIELD LINE TERMINATIOIN**

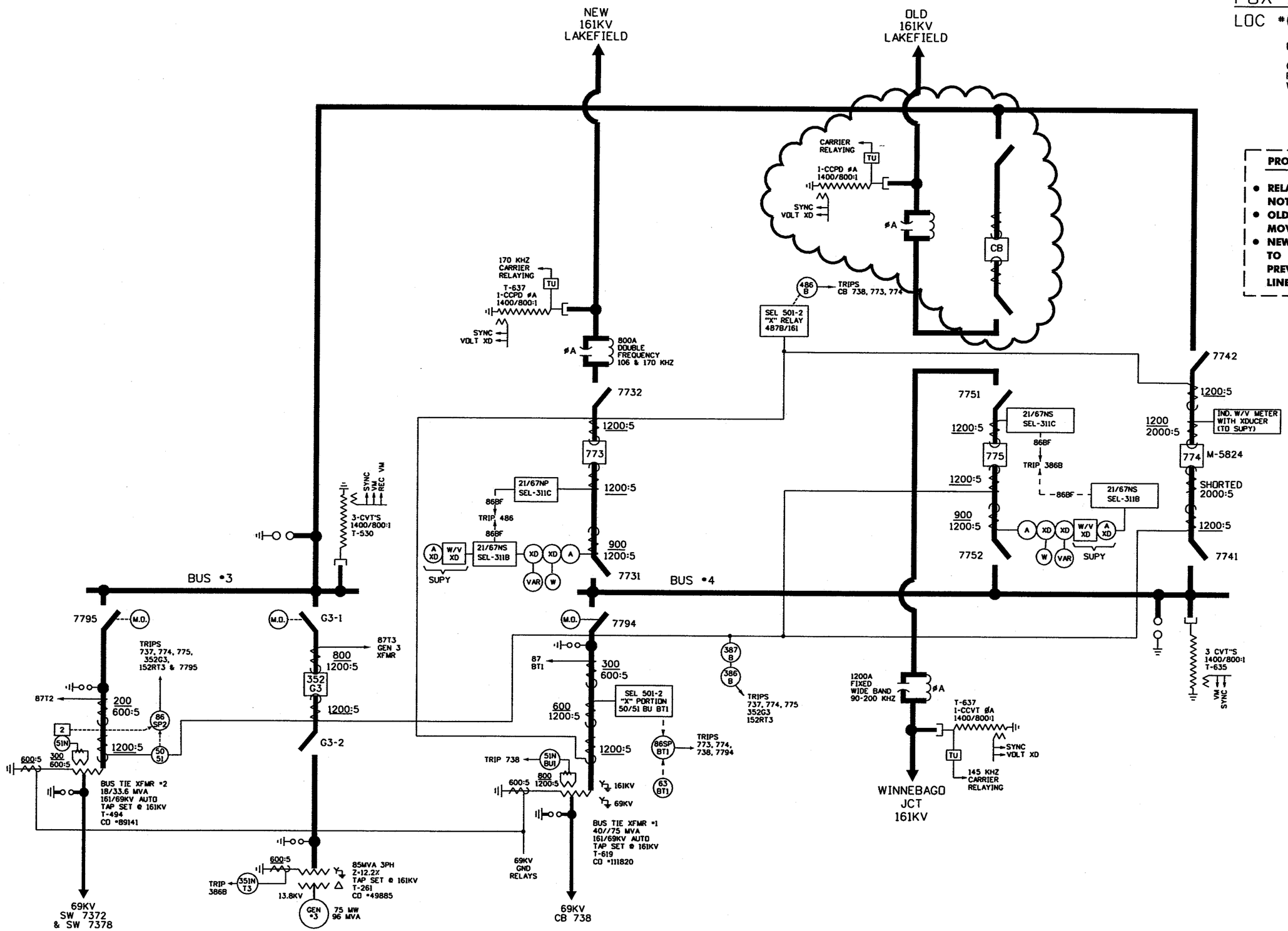

4-21-03
CAD:ILFL161