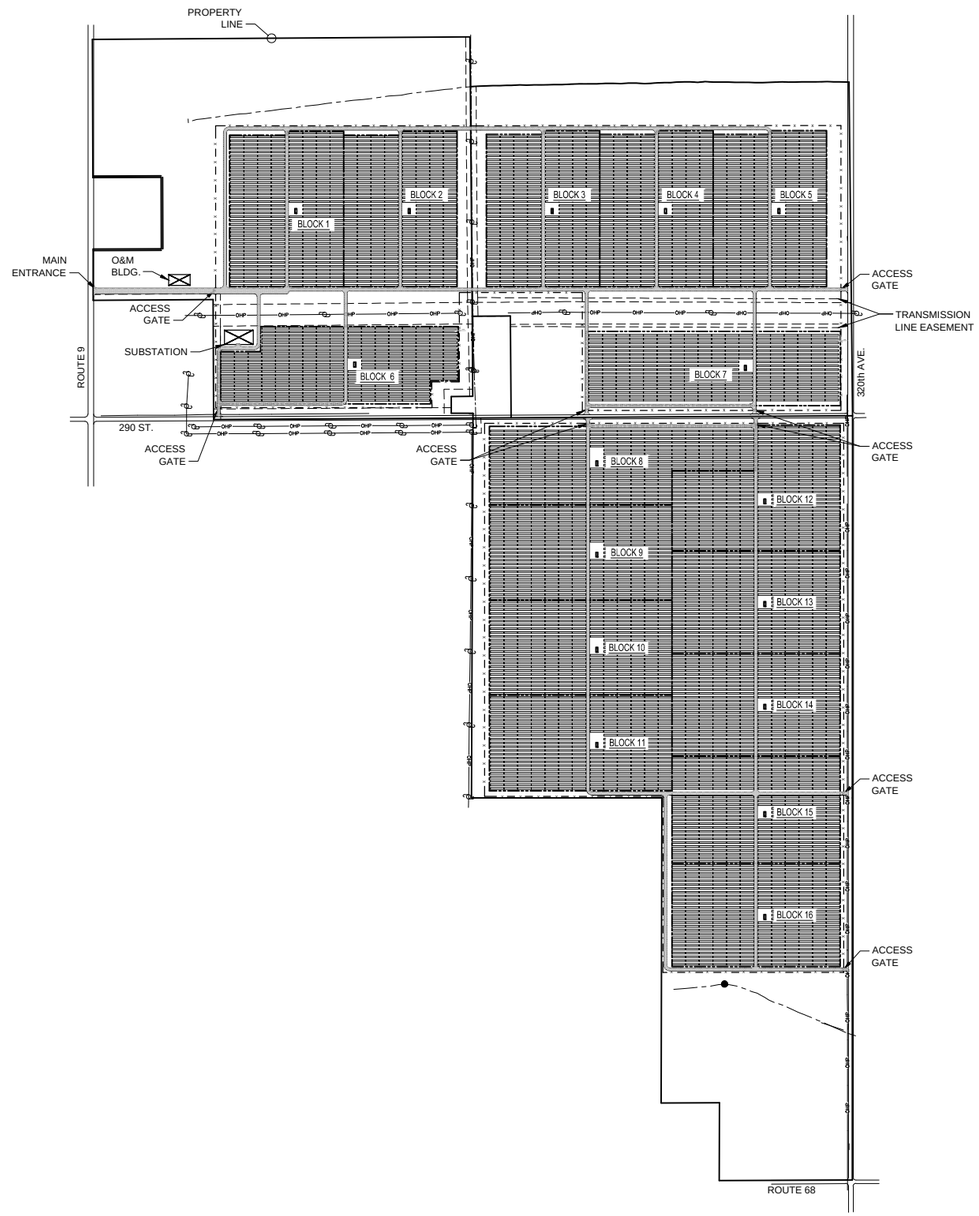

PROJECT SITE INFORMATION	
SYSTEM DESIGN VOLTAGE	1,500V
ASHRAE LOCATION	MARSHALL, MN
ASHRAE 0.2%	32°C
ASHRAE 0.4%	35°C
ASHRAE MINIMUM TEMP.	-27°C
DC OUTPUT	93.48 MW
AC OUTPUT	62.25 MW
AC INVERTER OUTPUT	64 MW
ARRAY GCR	50%
ARRAY GCR BLOCK 6 ONLY	53%
DC/AC RATIO	1.5
ACREAGE USED	311
SITE ACREAGE	500
FENCE LENGTH	~26,600 FEET
ACCESS ROAD LENGTH	~33,450 FEET
MODULES	TRINA TSM-PEG14
MODULE WATTAGE	325W
CELLS	72 MULTICRYSTALLINE
FRAME	FRAMELESS
INVERTER	GE 1500V 4MW
OVERDRIVE OPTION INCLUDED	NO
CEC EFFICIENCY	98%
INVERTER MAXIMUM VOLTAGE	1,500V
RATED MPPT RANGE	835-1275V
MAX. DC VOLTAGE	1,500V
MAX. CONT. DC CURRENT	5,000 A
MAX. CONT. DC CURRENT PER CABINET (X4)	1,250 A
MAX. POWER OUTPUT @ 50°C	4,000kVA
AC VOLTAGE	550V
NUMBER OF MPPT	1
NO. INVERTERS	16
RACKING	
CONFIGURATION	FIXED - 2 PORTRAIT
TILT	30° (NOT OPTIMIZED)
AZIMUTH	180°
PITCH	25 FEET
ARRAY SPECIFICATIONS	
PROJECT MODULE QUANTITY	287,616
ARRAY BLOCK MODULE QUANTITY	17,976
NO. OF ARRAY BLOCKS	16
STRING SIZE	28
NO. OF STRINGS IN A ARRAY BLOCK	642
TOTAL NO. OF STRINGS	10,272
ARRAY BLOCK STC DC RATING	5.8 MW
ARRAY MAXIMUM VOLTAGE	1,499 V
ARRAY RATED ISC	5,701 A
MAX. SHORT CIRCUIT CURRENT (ISC X 1.25)	7,126 A
RATED MAX. POWER POINT CURRENT	5,405 A

1	2	3	4	5	6	7	8	9	10	11	12	13	14	15	16	17	18	19	20	21	22	23	24	25	26	27	28
1	2	3	4	5	6	7	8	9	10	11	12	13	14	15	16	17	18	19	20	21	22	23	24	25	26	27	28

PORTRAIT LAYOUT - 2 ROWS OF 28 SOLAR MODULES

A SOLAR TABLE DETAIL
SCALE: N.T.S.

LEGEND

- OHP — OVER HEAD POWER LINE
- SOLAR BLOCK BOUNDARY
- FENCE
- ROAD
- INVERTER
- SOLAR TABLE (SEE DETAIL A)

NOTE

1. 16 FOOT MINIMUM DISTANCE FROM ALL RACKING TABLES TO PERIMETER FENCES.

PRELIMINARY
NOT FOR CONSTRUCTION

RRC POWER & ENERGY, LLC
87662 SW MOHAWK STREET
TUALATIN, OR 97062
PHONE: (503) 342-4064
www.RRCcompanies.com

CONFIDENTIAL
THIS DRAWING IS THE PROPERTY OF RRC POWER & ENERGY, LLC AND NO REPRODUCTION MAY BE MADE IN WHOLE OR IN PART WITHOUT WRITTEN CONSENT.

PREPARED FOR:

REV	DATE	ISSUE DESCRIPTION
E	02/04/2015	REVIEW
D	02/03/2015	REVIEW
C	01/29/2015	REVIEW
B	01/23/2015	REVIEW
A	01/16/2015	REVIEW

PROJECT MGR: S. MOSER
CHECKED BY: T. BAILEY
DESIGNED BY: J. MOFFIT
DRAWN BY: J. MOFFIT

SCALE: 1" = 500'-0"
0 — 2"
BAR MUST SCALE 2" FOR FULL SIZE OR 1" FOR HALF SIZE DRAWING

PROJECT NUMBER: M-150001

DRAWING NAME:
MARSHALL
SOLAR PROJECT
SITE PLAN

DATE ISSUED: 01/16/2014

DRAWING No.	SHEET:	REVISION
E-710-01	1 of 1	E

CADFILE: MSP-E-710-01

Z:\PROJECTS\BLATTNER - MARSHALL SOLAR\DRAWINGS\MSP-E-710-01.DWG

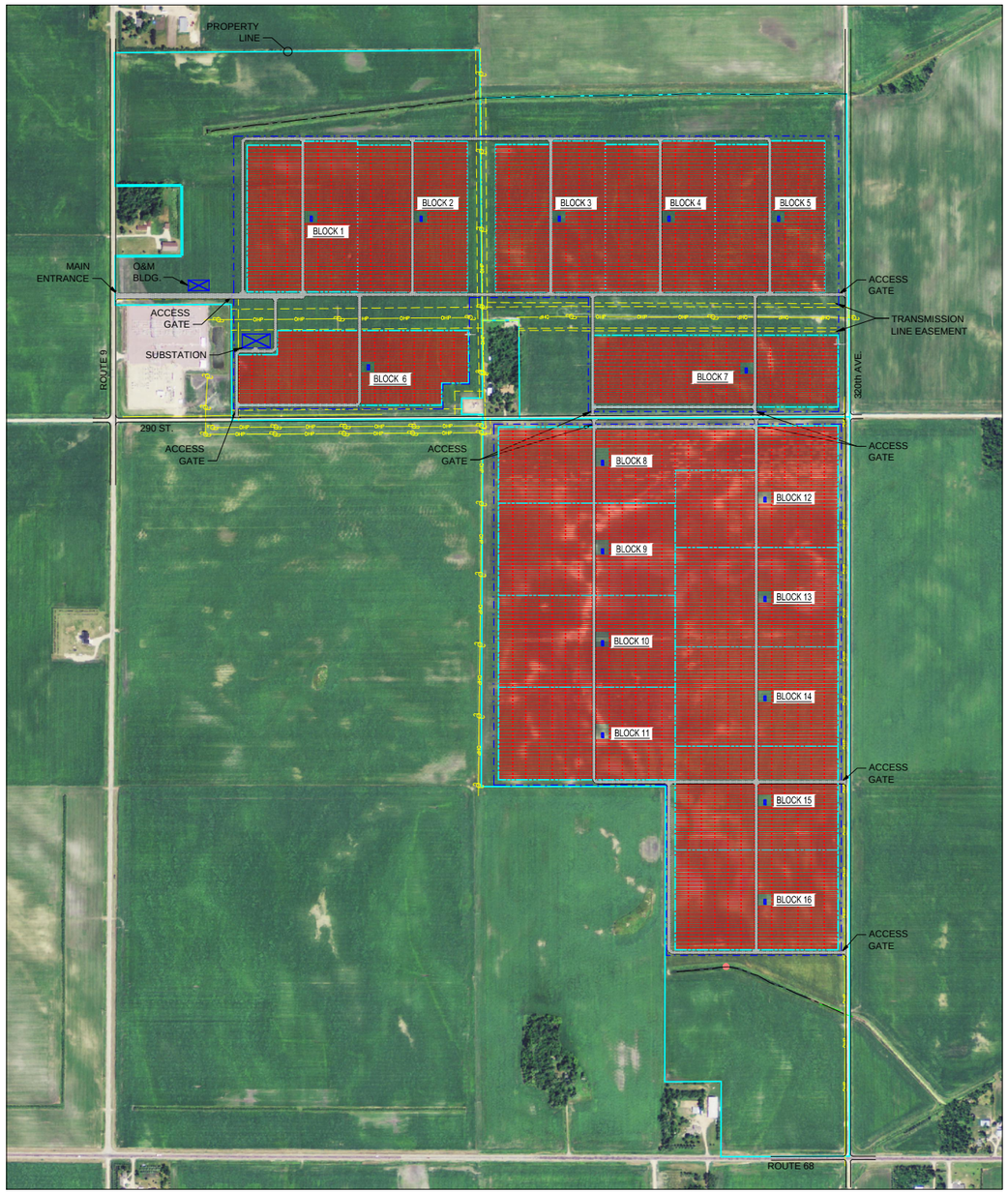

PROJECT SITE INFORMATION	
SYSTEM DESIGN VOLTAGE	1,500V
ASHRAE LOCATION	MARSHALL, MN
ASHRAE 0.2%	32°C
ASHRAE 0.4%	35°C
ASHRAE MINIMUM TEMP.	-27°C
DC OUTPUT	93.48 MW
AC OUTPUT	62.25 MW
AC INVERTER OUTPUT	64 MW
ARRAY GCR	50%
ARRAY GCR BLOCK 6 ONLY	53%
DC/AC RATIO	1.5
ACREAGE USED	311
SITE ACREAGE	500
FENCE LENGTH	~26,600 FEET
ACCESS ROAD LENGTH	~33,450 FEET
MODULES	TRINA TSM-PEG14
MODULE WATTAGE	325W
CELLS	72 MULTICRYSTALLINE
FRAME	FRAMELESS
INVERTER	GE 1500V 4MW
OVERDRIVE OPTION INCLUDED	NO
CEC EFFICIENCY	98%
INVERTER MAXIMUM VOLTAGE	1,500V
RATED MPPT RANGE	835-1275V
MAX. DC VOLTAGE	1,500V
MAX. CONT. DC CURRENT	5,000 A
MAX. CONT. DC CURRENT PER CABINET (X4)	1,250 A
MAX. POWER OUTPUT @ 50°C	4,000kVA
AC VOLTAGE	550V
NUMBER OF MPPT	1
NO. INVERTERS	16
RACKING	
CONFIGURATION	FIXED - 2 PORTRAIT
TILT	30° (NOT OPTIMIZED)
AZIMUTH	180°
PITCH	25 FEET
ARRAY SPECIFICATIONS	
PROJECT MODULE QUANTITY	287,616
ARRAY BLOCK MODULE QUANTITY	17,976
NO. OF ARRAY BLOCKS	16
STRING SIZE	28
NO. OF STRINGS IN A ARRAY BLOCK	642
TOTAL NO. OF STRINGS	10,272
ARRAY BLOCK STC DC RATING	5.8 MW
ARRAY MAXIMUM VOLTAGE	1,499 V
ARRAY RATED ISC	5,701 A
MAX. SHORT CIRCUIT CURRENT (ISC X 1.25)	7,126 A
RATED MAX. POWER POINT CURRENT	5,405 A

1 2 3 4 5 6 7 8 9 10 11 12 13 14 15 16 17 18 19 20 21 22 23 24 25 26 27 28
1 2 3 4 5 6 7 8 9 10 11 12 13 14 15 16 17 18 19 20 21 22 23 24 25 26 27 28

PORTRAIT LAYOUT - 2 ROWS OF 28 SOLAR MODULES

A SOLAR TABLE DETAIL
SCALE: N.T.S.

LEGEND

- OHP — OVER HEAD POWER LINE
- SOLAR BLOCK BOUNDARY
- FENCE
- ROAD
- INVERTER
- SOLAR TABLE (SEE DETAIL A)

NOTE

1. 16 FOOT MINIMUM DISTANCE FROM ALL RACKING TABLES TO PERIMETER FENCES.

PRELIMINARY
NOT FOR CONSTRUCTION

RRC POWER & ENERGY, LLC
87662 SW MOHAWK STREET
TUALATIN, OR 97062
PHONE: (503) 342-4064
www.RRCcompanies.com

CONFIDENTIAL
THIS DRAWING IS THE PROPERTY OF RRC POWER & ENERGY, LLC AND NO REPRODUCTION MAY BE MADE IN WHOLE OR IN PART WITHOUT WRITTEN CONSENT.

PREPARED FOR:

REV	DATE	ISSUE DESCRIPTION
E	02/04/2015	REVIEW
D	02/03/2015	REVIEW
C	01/29/2015	REVIEW
B	01/23/2015	REVIEW
A	01/16/2015	REVIEW

PROJECT MGR: S. MOSER
CHECKED BY: T. BAILEY
DESIGNED BY: J. MOFFIT
DRAWN BY: J. MOFFIT

SCALE: 1" = 500'-0"
0 — 2"
BAR MUST SCALE 2" FOR FULL SIZE OR 1" FOR HALF SIZE DRAWING

PROJECT NUMBER: M-150001

DRAWING NAME:
MARSHALL SOLAR PROJECT SITE PLAN

DATE ISSUED: 01/16/2014

DRAWING No. E-710-01 | SHEET: 1 of 1 | REVISION E

CADFILE: MSP-E-710-01

Z:\PROJECTS\BLATTNER - MARSHALL SOLAR\DRAWINGS\MSP-E-710-01.DWG

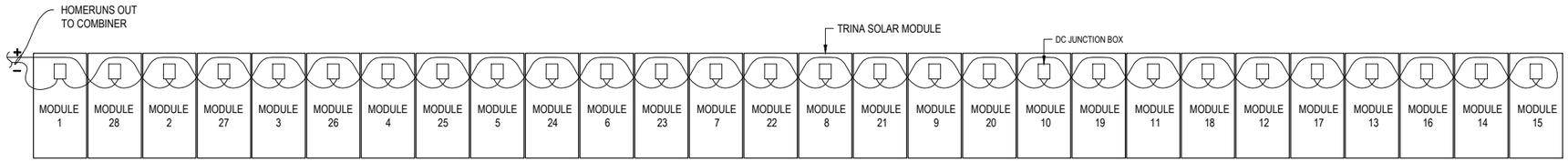

A SOLAR LEAP FROG WIRING
SCALE: N.T.S.

ALL SIZES AND LENGTHS TO BE DETERMINED

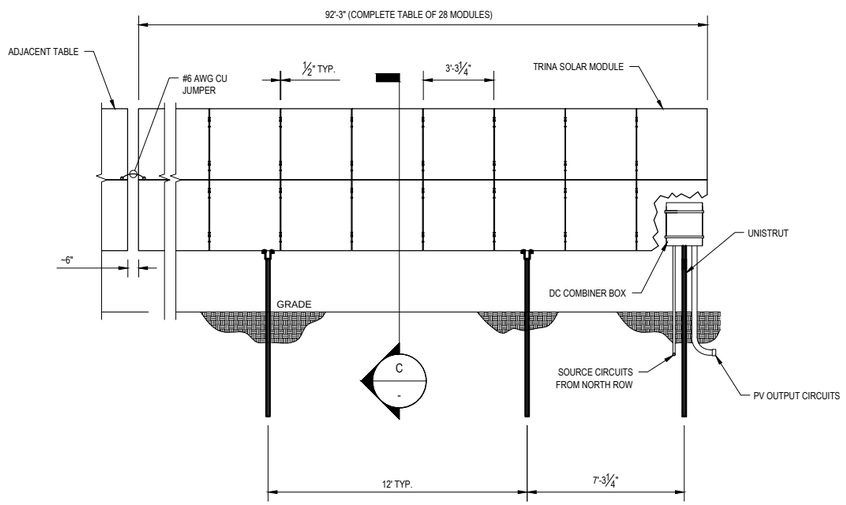

B SOLAR SOUTH ELEVATION VIEW
SCALE: N.T.S.

ALL SIZES AND LENGTHS TO BE DETERMINED

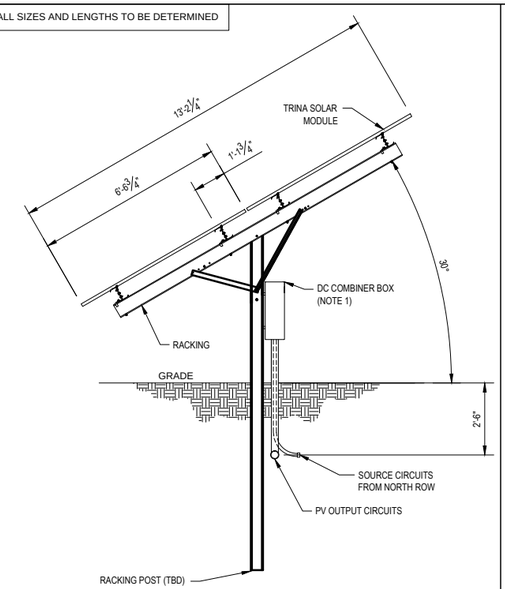

NOTE
1. RRC ASSUMES THAT THE COMBINER BOXES ARE MOUNTED TO THE SUPPORT TABLE PILES.

C SOLAR RACKING/MODULE EAST SECTION VIEW
SCALE: N.T.S.

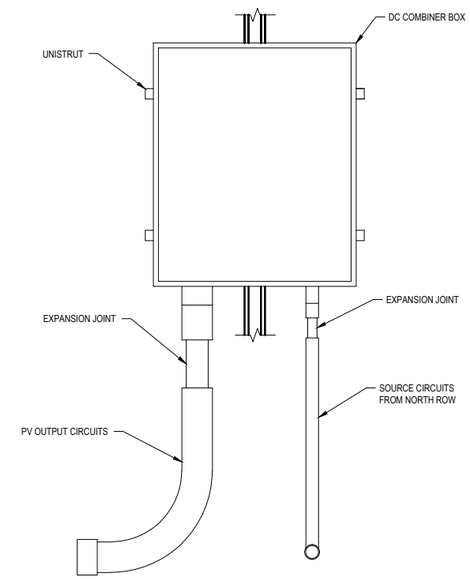

D COMBINER BOX DETAIL
SCALE: N.T.S.

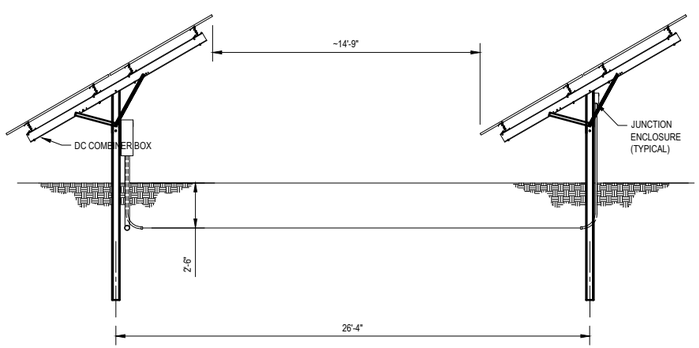

E SOLAR TABLE SPACING
SCALE: N.T.S.

PRELIMINARY
NOT FOR CONSTRUCTION

RRC POWER & ENERGY, LLC
87662 SW MOHAWK STREET
TUALATIN, OR 97062
PHONE: (503) 342-4064
www.RRCcompanies.com

CONFIDENTIAL
THIS DRAWING IS THE PROPERTY OF RRC POWER & ENERGY, LLC AND NO REPRODUCTION MAY BE MADE IN WHOLE OR IN PART WITHOUT WRITTEN CONSENT.

PREPARED FOR:

REV	DATE	ISSUE DESCRIPTION
C	02/23/2015	REVIEW
B	02/10/2015	REVIEW
A	01/16/2015	REVIEW

PROJECT MGR: S. MOSER
CHECKED BY: T. BAILEY
DESIGNED BY: J. MOFFIT
DRAWN BY: J. MOFFIT

SCALE: N.T.S.
0 2"
BAR MUST SCALE 2" FOR FULL SIZE OR 1" FOR HALF SIZE DRAWING

PROJECT NUMBER: M-150001

DRAWING NAME:
MARSHALL
SOLAR PROJECT
PV TABLE
MOUNTING OPTIONS

DATE ISSUED: 01/16/2014

DRAWING No.	SHEET:	REVISION
E-711-01	1 of 1	C

CADFILE: MSP-E-711-01

Z:\PROJECTS\BLATTNER - MARSHALL SOLAR\DRAWINGS\MSP-E-711-01.DWG