TB.V8.01.01

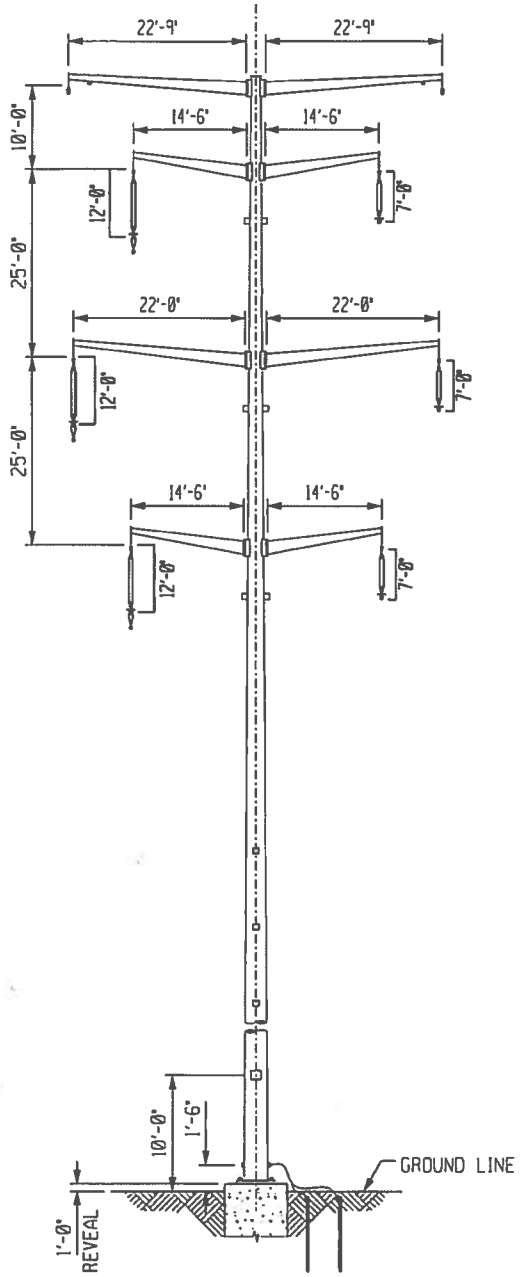

CONFIDENTIAL

These documents are for the use of ITC Holdings Corp. ITC Holdings Corp. disclaims all warranties, both expressed and implied. Use by anyone other than ITC Holdings Corp. is at their own risk.

ITC Midwest

NO.	DATE	REVISION	BY	CHK'D	APV'D
0					

MN-IA 345KV TRANSMISSION PROJECT

Typical 345kV-161kV Vertical Tangent

Structure Drawing

345kV-69kV CIRCUITS

Scale:

DWG. NO.

Plotted: $DATE$
File: $FILE$

TB.V8.01.01

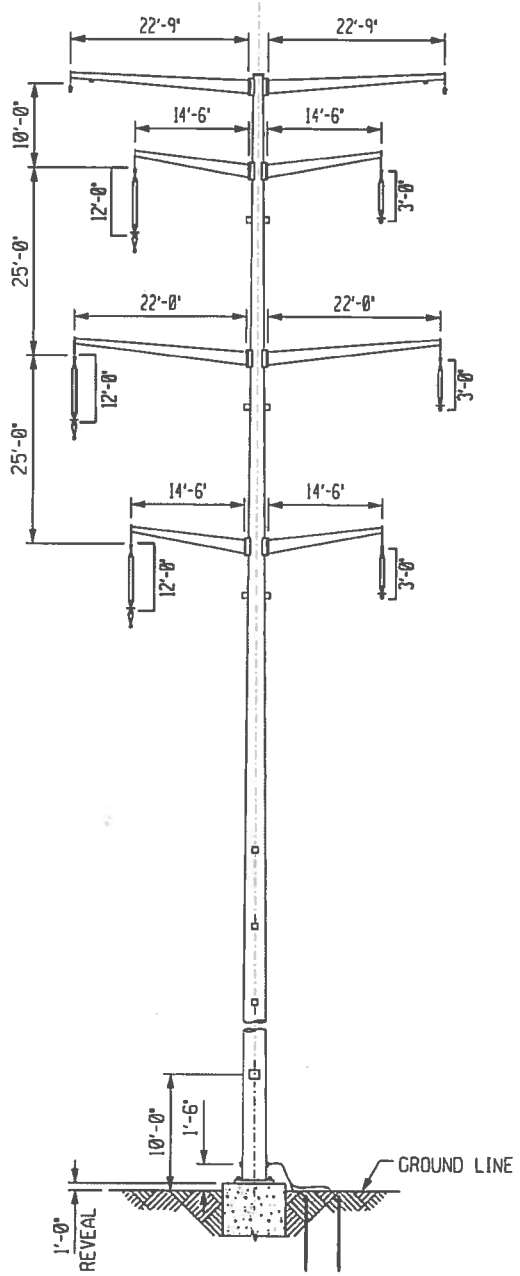

CONFIDENTIAL
These documents are for the use of ITC Holdings Corp. ITC Holdings Corp. disclaims all warranties, both expressed and implied. Use by anyone other than ITC Holdings Corp. is at their own risk.

ITC Midwest

NO.	DATE	REVISION	BY	CHK'D	APV'D
0					

MN-IA 345KV TRANSMISSION PROJECT

Typical 345kV-161kV Vertical Tangent

Structure Drawing

Scale:

DWG. NO.

Plotted: $DATE$
File: $FILE$

TB.V8.01.01

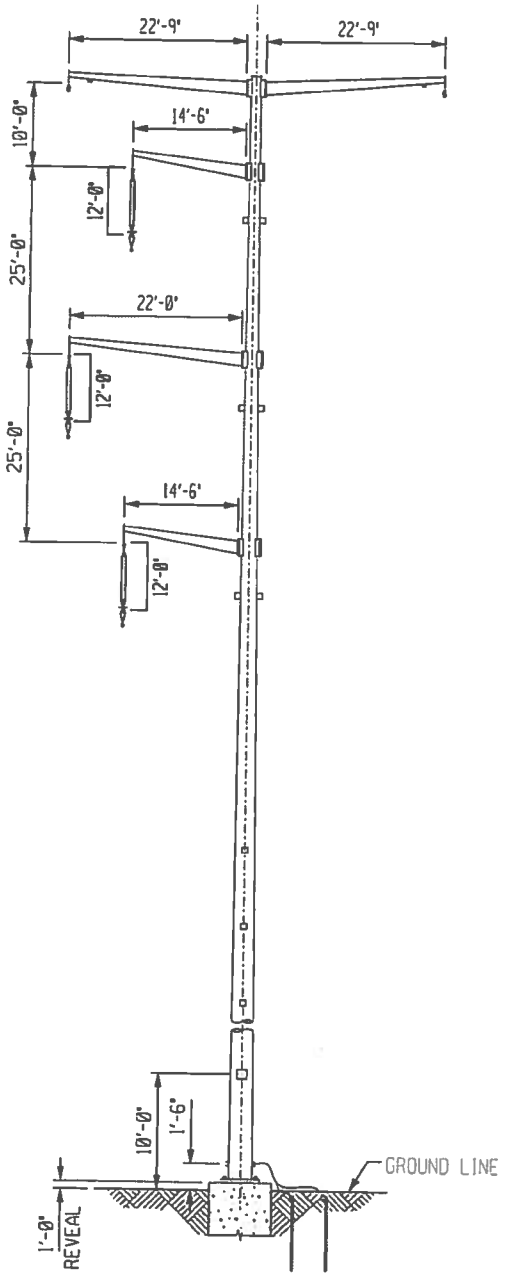

CONFIDENTIAL

These documents are for the use of ITC Holdings Corp. ITC Holdings Corp. disclaims all warranties both expressed and implied. Use by anyone other than ITC Holdings Corp. is at their own risk.

ITC Midwest

NO.	DATE	REVISION	BY	CHK'D	APV'D
0					

MN-IA 345KV TRANSMISSION PROJECT

Typical 345kV-161kV Vertical Tangent

Structure Drawing

345KV ONLY

Scale:

DWG. NO.

Plotted: $DATE$
File: $FILE$

TB.V8.01.01

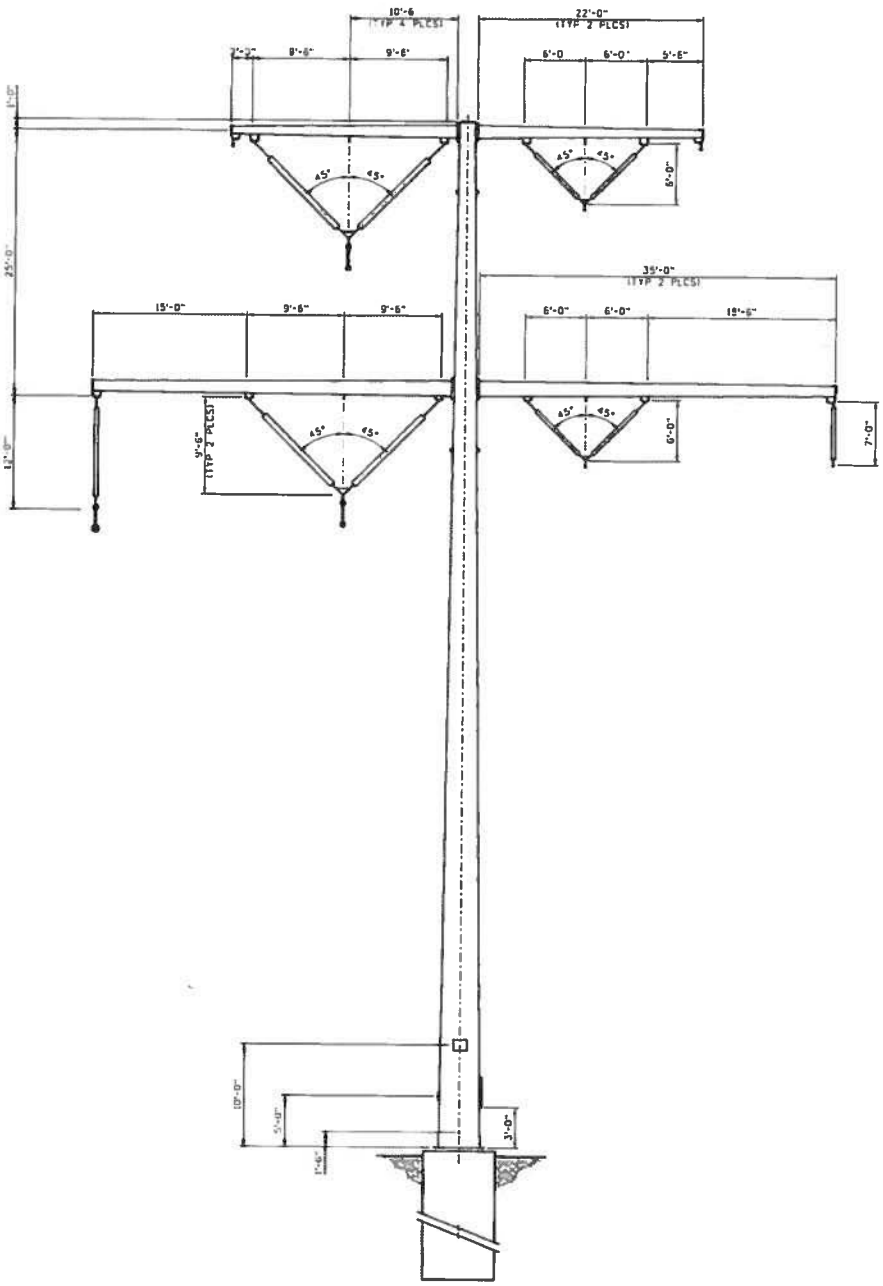

ELEVATION VIEW

CONFIDENTIAL
These documents are for the use of ITC Holdings Corp. ITC Holdings Corp. disclaims all warranties, both expressed and implied. Use by anyone other than ITC Holdings Corp. is at their own risk.

ITC Midwest

NO.	DATE	REVISION	BY	CHK'D	APV'D
0		ORIGINAL ISSUE ( )			

ITC

Typical 345kV/161kV Tangent
Structure Drawing
Low Profile

Scale:

DWG. NO.

Plotted: $DATE$
File: $FILE$

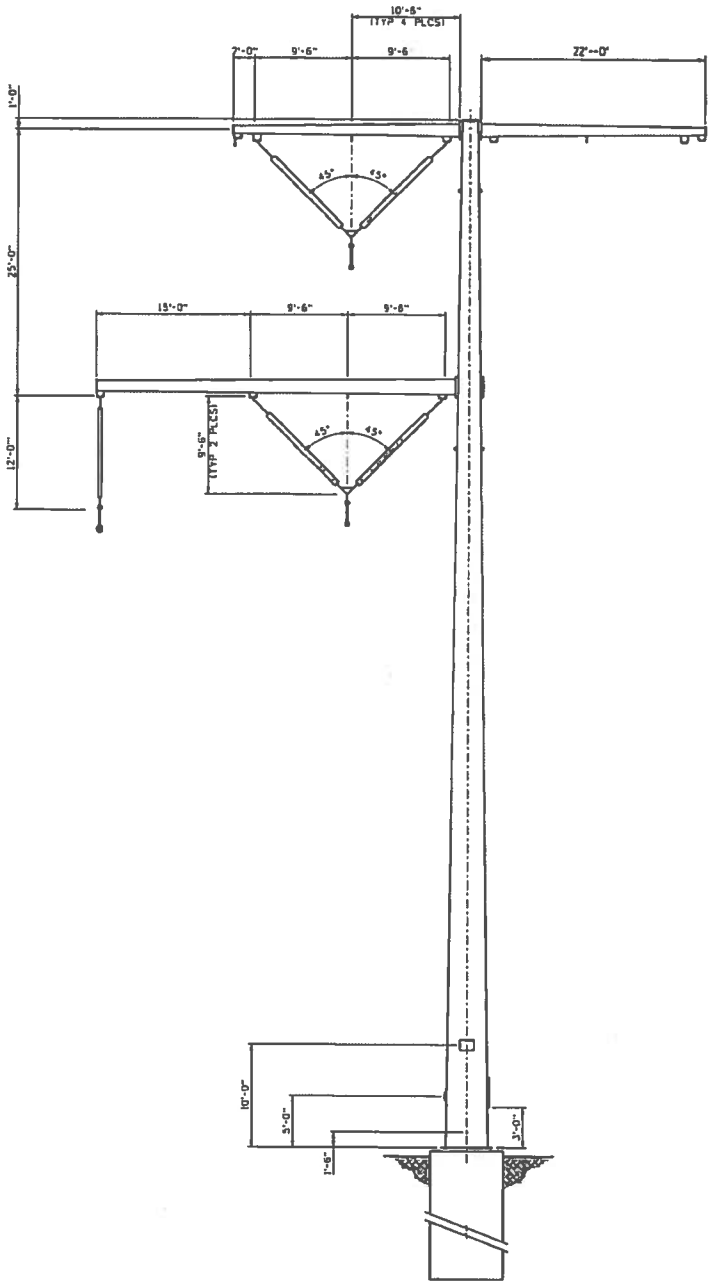

ELEVATION VIEW

CONFIDENTIAL
These documents are for the use of ITC Holdings Corp. ITC Holdings Corp. disclaims all warranties, both expressed and implied. Use by anyone other than ITC Holdings Corp. is at their own risk.

ITC Midwest

NO.	DATE	REVISION	BY	CHK'D	APV'D
0		ORIGINAL ISSUE ( )			

ITC

Typical 345kV/161kV Tangent
Structure Drawing
Low Profile 345kV ONLY

Scale:

DWG. NO.

Plotted: $DATE$
File: $FILE$

TB.V8.01.01

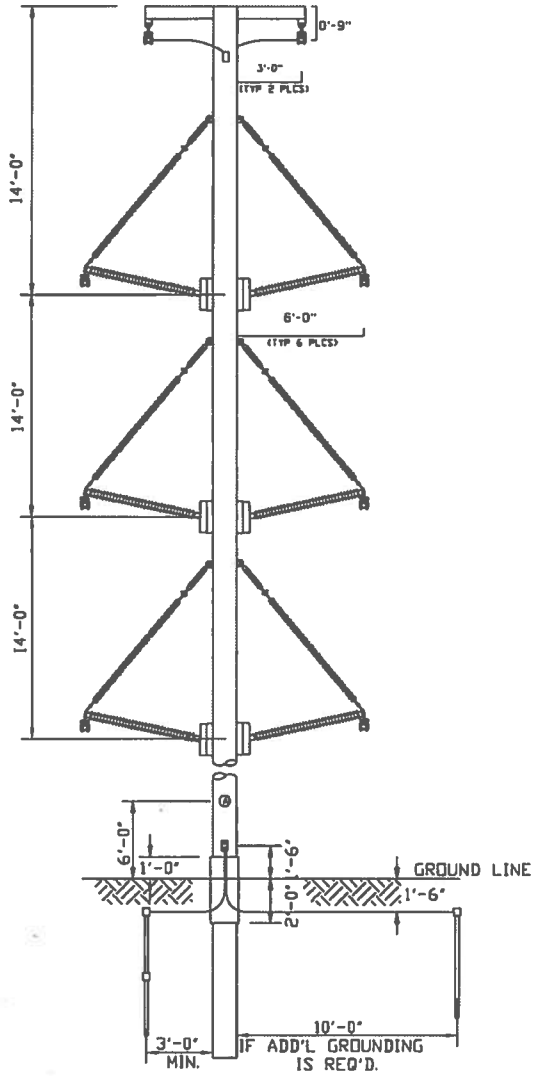

CONFIDENTIAL
These documents are for the use of ITC Holdings Corp. ITC Holdings Corp. disclaims all warranties, both expressed and implied. Use by anyone other than ITC Holdings Corp. is at their own risk.

ITC Midwest

NO.	DATE	REVISION	BY	CHK'D	APV'D

MN-IA 345KV TRANSMISSION PROJECT

TYPICAL 161KV/161KV TANGENT
STRUCTURE DRAWING

Scale: NONE

DWG. NO.

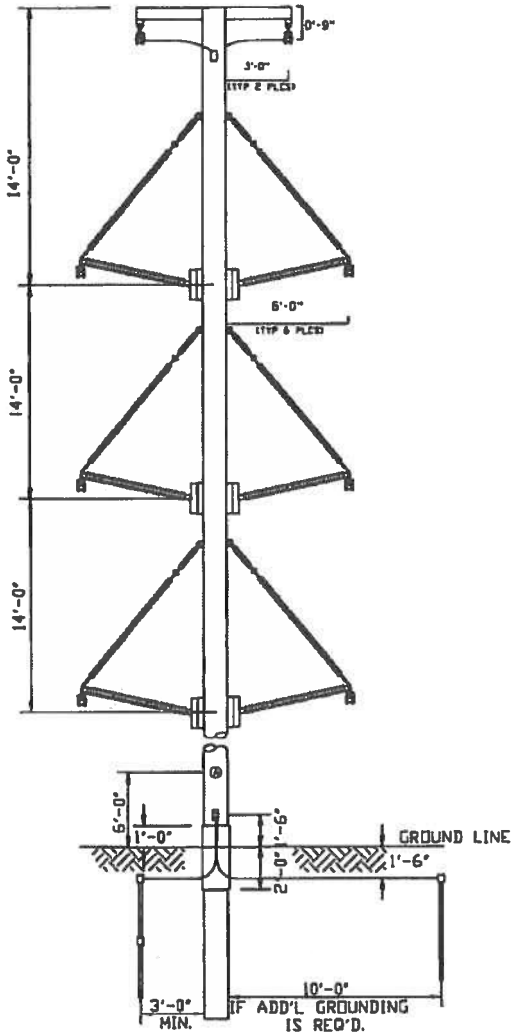

CONFIDENTIAL
These documents are for the use of ITC Holdings Corp. ITC Holdings Corp. disclaims all warranties, both expressed and implied. Use by anyone other than ITC Holdings Corp. is at their own risk.

ITC Midwest

NO.	DATE	REVISION	BY	CHK'D	APV'D
0					

MN-IA 345KV TRANSMISSION PROJECT

Typical 161kV-161kV Vertical Tangent

Structure Drawing
161kV - 69kV Circuits

Scale:

DWG. NO.

Plotted: $DATE$
File: $FILE$

TB.V8.01.01

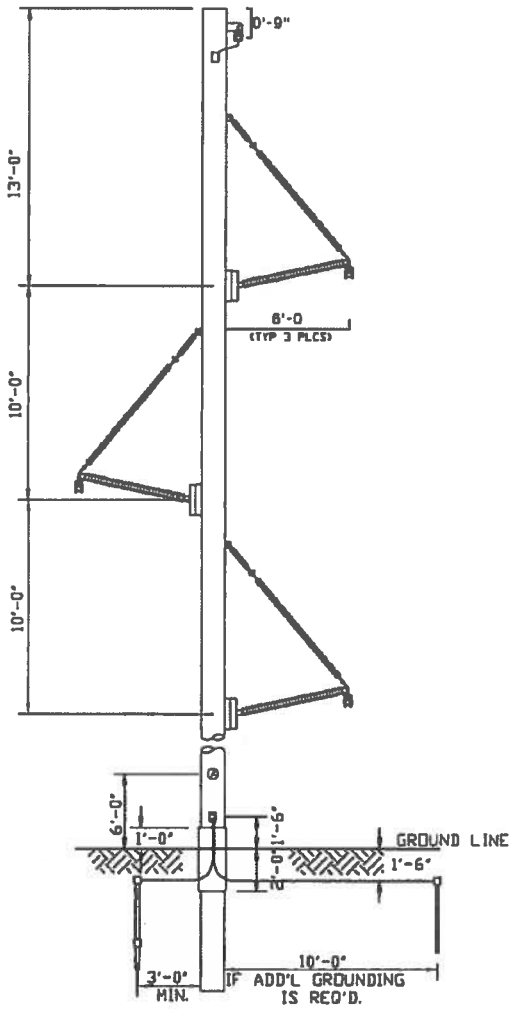

CONFIDENTIAL
These documents are for the use of ITC Holdings Corp. ITC Holdings Corp. disclaims all warranties, both expressed and implied. Use by anyone other than ITC Holdings Corp. is at their own risk.

ITC Midwest

NO.	DATE	REVISION	BY	CHK'D	KTC APV'D

MN-IA 345KV TRANSMISSION PROJECT

TYPICAL 161KV TANGENT
STRUCTURE DRAWING

Scale: NONE

DWG. NO.