STATE OF MINNESOTA
OFFICE OF ADMINISTRATIVE HEARINGS
FOR THE PUBLIC UTILITIES COMMISSION

In the Matter of the Northern States Power Company Certificate of Need Application for Two 115kV High Voltage Transmission Lines known as the Hiawatha Project	OAH DOCKET NO. _____ PUC DOCKET NO. E002/CN-10-694

AFFIDAVIT OF BRUCE McKAY, P.E.

Bruce McKay, P.E., after affirming or being duly sworn on oath, states and deposes as follows:

1. My name is Bruce McKay. I am an electrical engineer, and licensed Professional Engineer, in the state of Minnesota.

2. My experience is primarily in the areas of industrial power distribution and industrial automation and control. I have 16 years experience in these areas as a licensed Master Electrician, followed by 14 years as a licensed Professional Engineer to date.

3. I am a landowner near Henderson, MN, and therefore am not directly affected by the proposed Hiawatha Project transmission line.

4. I am filing this scoping comment for the Hiawatha Project Transmission Line to request that the Environmental Report address the full range of potential magnetic fields.

5. Attached as Exhibit A is a true and correct copy of the line configurations and specifications found on p. 15-27 of the Certificate of Need Application for the Hiawatha Project.

6. Attached as Exhibit B is a true and correct copy of Direct Testimony of Larry L. Schedin, Attachment J, showing the Summer Thermal Ampacity Rating and Summer Thermal MVA Rating for various conductor specifications, including, at the top of the chart on p. 3, Single 795 kcm 26/7 ACSR, 115 KV (963 amps and 192 MVA) and on pages 4-5, Winter Ratings (1286 amps and 256 VMA). For the purposes of this Affidavit, I am using the lower summer ratings, but it should be noted that winter ratings are approximately an additional 30%, and the magnetic field levels presented are not the higher potential winter levels.

7. The first purpose of this statement is to point out the fact that the Hiawatha Project Magnetic Field tables and charts that I've seen in Hiawatha Project documents all fail to address the <u>full potential Magnetic Field</u> along the transmission lines. Each table and chart that I've seen displays Magnetic Field data calculated from <u>estimated</u> Peak and <u>estimated</u> Average System Conditions (Current (Amps)) rather than from transmission line <u>design capacities</u>. An example of such a table is presented in the attached Exhibit C, a true and correct copy of Hiawatha Project Figure 41- Calculated Magnetic Flux Density Chart, which is from the Hiawatha Project Certificate of Need Application, page 102.

8. The second purpose of this statement is to point out the fact that a table such as this underestimates the Magnetic Field that would be created if the transmission line was utilized

to its full potential capacity, or 75% of its full potential capacity. The attached Exhibit D is a true and correct copy of "McKay Magnetic Field Calculations" which presents an example of Magnetic Field calculations for the A, B and C Route options based on estimated transmission line currents as compared to Magnetic Field calculations based on future potential (design) transmission line currents. By following through STEPS 1, 2, 3, and 4 in Exhibit D, you can see that for Route A, Double-Circuited, the Calculated PEAK MAGNETIC FIELDS increase by 839% and the Calculated AVERAGE MAGNETIC FIELDS increase by 1049%. For Routes B and C, both single circuit, the Calculated PEAK MAGNETIC FIELDS increase by 419% and the Calculated AVERAGE MAGNETIC FIELDS increase by 524% when design capacities are used for the calculations rather than using estimated load currents. (Please Note: Exhibit D is presented as a conceptual example. Actual design capacities and associated Magnetic Field calculations would need to be and should be provided by the Applicants.)

9. The third purpose of this statement is to point out the fact that no calculations were presented for modeled magnetic field levels at the same distances from centerline but higher off the ground to represent second or third floor locations of apartment buildings or condos that the proposed transmission lines would be passing near.

10. The fourth purpose of this statement is to stress that right-of-way widths to protect the health and safety of those along the proposed transmission line need to be based on Calculated Magnetic Field's derived from design capacities, NOT on Calculated Magnetic Field's derived from estimated transmission line currents. A right-of-way based on the Applicant's low transmission line current estimates does not sufficiently protect people near the transmission lines.

11. Please feel free to contact me with any comments or questions you have.

Further your affiant sayeth naught.

Dated: April 6, 2011

Bruce McKay, PE
e-mail: bmckay.aces@gmail.com
cell: 612-386-5983

Signed and sworn to before me this
6 day of April, 2011.

Notary Public

WERNER H. GIESEN
Notary Public
State of Minnesota
My Commission Expires
January 31, 2015

EXHIBIT A

Line Configurations and Specifications

Certificate of Need Application
Section 2.0 Project Description
p. 15-27

2.0 PROJECT DESCRIPTION

The Project includes two new substations, a Midtown Substation and a Hiawatha Substation, and two 115 kV transmission line connections between the two substations. Xcel Energy's proposal is to construct the transmission lines along Route A, build the Midtown Substation at the Midtown North site and the Hiawatha Substation at the Hiawatha West location. This double circuit design maximizes efficiencies and reduces overall right-of-way requirements. Detailed descriptions of the Project components and transmission line characteristics are provided in this chapter. This chapter also includes information regarding schedule, costs and rate impact.

2.1 FACILITIES TO BE CONSTRUCTED

2.1.1 SUBSTATIONS

The Company identified a need for additional sources in the Project Area, specifically in the areas of high load concentrations along Hiawatha Avenue, Lake Street and along Chicago Avenue and Park Avenue corridors. To address this need the two new substations are proposed to be located in the concentrated load areas, as shown in Figure 4.

Figure 4: Substation Locations Within Concentrated Load Areas

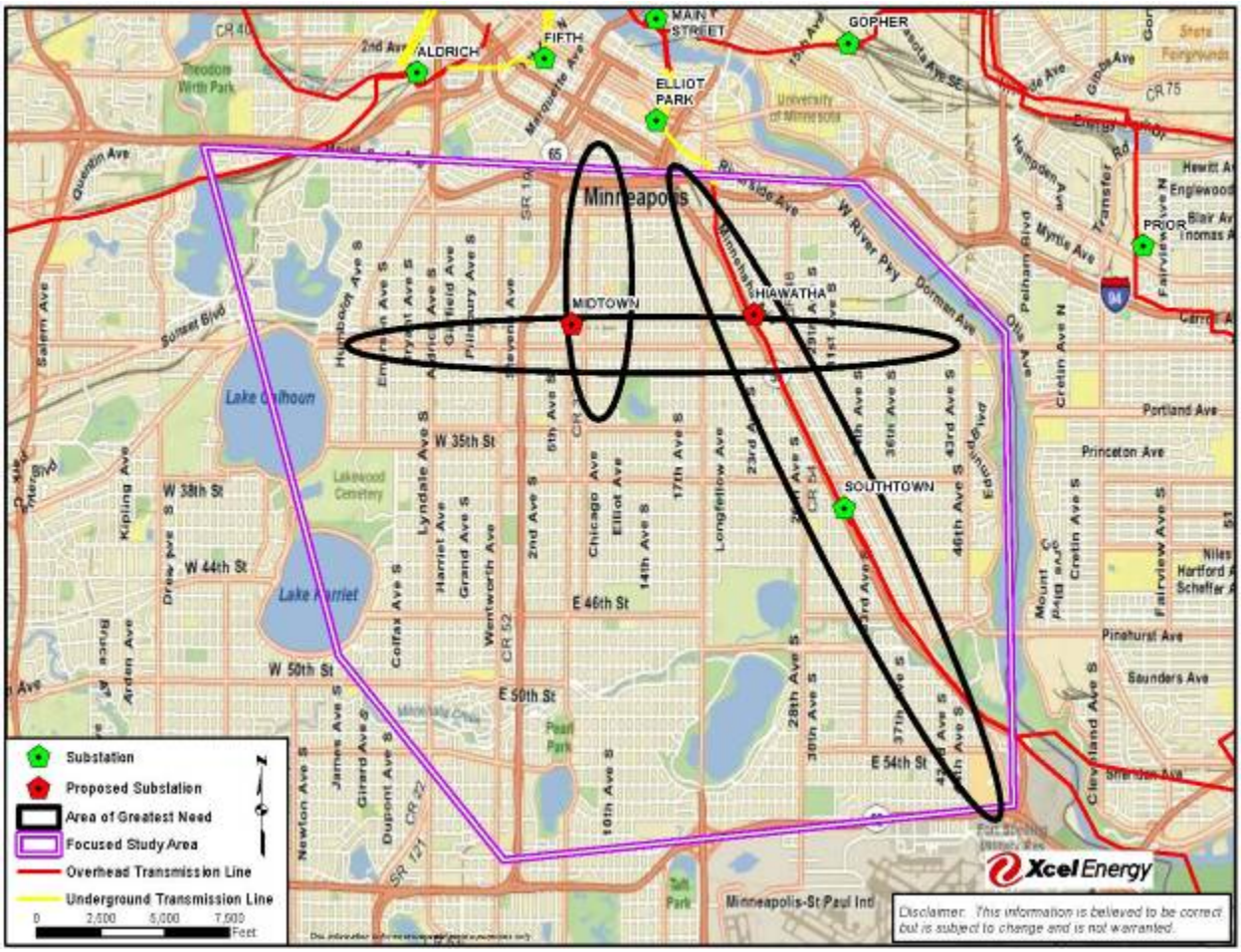

On the west end, the Midtown Substation is proposed to be located on the northwest corner of the intersection of Oakland Avenue and the Midtown Greenway. It is proposed to be a high profile design of approximately three quarters of an acre. Equipment at the substation would include:

> Two 115 kV transmission line steel box structures and related substation equipment and structures;
>
> One 70 MVA, 118-14.4 kV, LTC distribution transformer; and
>
> One electrical equipment enclosure containing 13.8 kV distribution feeder equipment, electrical controls, protective relaying, and auxiliary equipment for the operation of the substation.

The Midtown Substation alternatives will be surrounded by an architecturally-designed, decorative wall which will aid in mitigating noise generated by the operation of the substation. In addition, the Company plans to install lower noise transformers, sound absorbing materials for the transformer fire walls and rubber matting under the substation transformers.

A new Hiawatha Substation is proposed on the east end of the Project. The Hiawatha Substation is proposed as a low profile design, approximately two (2) acres in size. The Hiawatha Substation would initially consist of the following equipment:

> 115 kV transmission line dead-end structures and related substation equipment and structures.
>
> One 13.8 kV transformer termination structure;
>
> One 50 MVA, 118-14.4 kV, Load Tap Changer ("LTC") distribution transformer;
>
> One switchgear enclosure containing 13.8 kV distribution equipment; and
>
> One electrical equipment enclosure containing electrical controls, protective relaying, and auxiliary equipment for the operation of the substation.

Conceptual layouts for the Midtown Substation and the Hiawatha Substation are provided in Appendix D.

2.1.2 TRANSMISSION LINES

2.1.2.1 ROUTE A

Xcel Energy proposes to construct two 115 kV transmission lines along Route A. There are three potential alignments along Route A. Alignment A1 follows 29th Street and consists of two overhead 115 kV transmission lines on double circuit structures. Alignment A2 is an underground design along 29th Street, parallel to the Midtown Greenway. Alignment A3 is an underground design on an alignment under the bike/walking path along the north edge of the Midtown Greenway.

For Route A—Alignment A1, Xcel Energy proposes to use galvanized, self-weathering/rust-colored steel double circuit structures with davit arms. For areas where the Project will cross existing and future light rail, auto, and pedestrian paths, custom designed structures will be used.

The right-of-way required would be 50 feet, 25 feet on each side of the pole, and located in public streets and the Midtown Greenway. Average spans between structures will be approximately 500 feet. However, span lengths may vary between structures from as short as 300 feet to as long as 1,000 feet to accommodate future plans for the area, such as future transit within the Midtown Greenway. The proposed conductor is 795 kcmil Aluminum Conductor Steel Reinforced ("ACSR") 26/7 or conductor of comparable capacity per phase ("kcmil" is a unit of measure representing "thousand circular mils").

The poles would be approximately 75-feet tall. Depictions of typical tangent and dead-end double circuit structures are shown in Figure 5 and Figure 6. At several locations the lines would cross existing and future light rail, auto and pedestrian paths. There will be custom designed structures for the current and future light rail corridors based on the field requirements at each location. These custom structures would be similar to the dead end structures depicted below with an additional arm to support crossings eliminating the need for an additional structure. These structures have not been designed at the time of filing, but will be designed once Commission approvals are obtained.

Figure 5: Double Circuit Tangent Structure

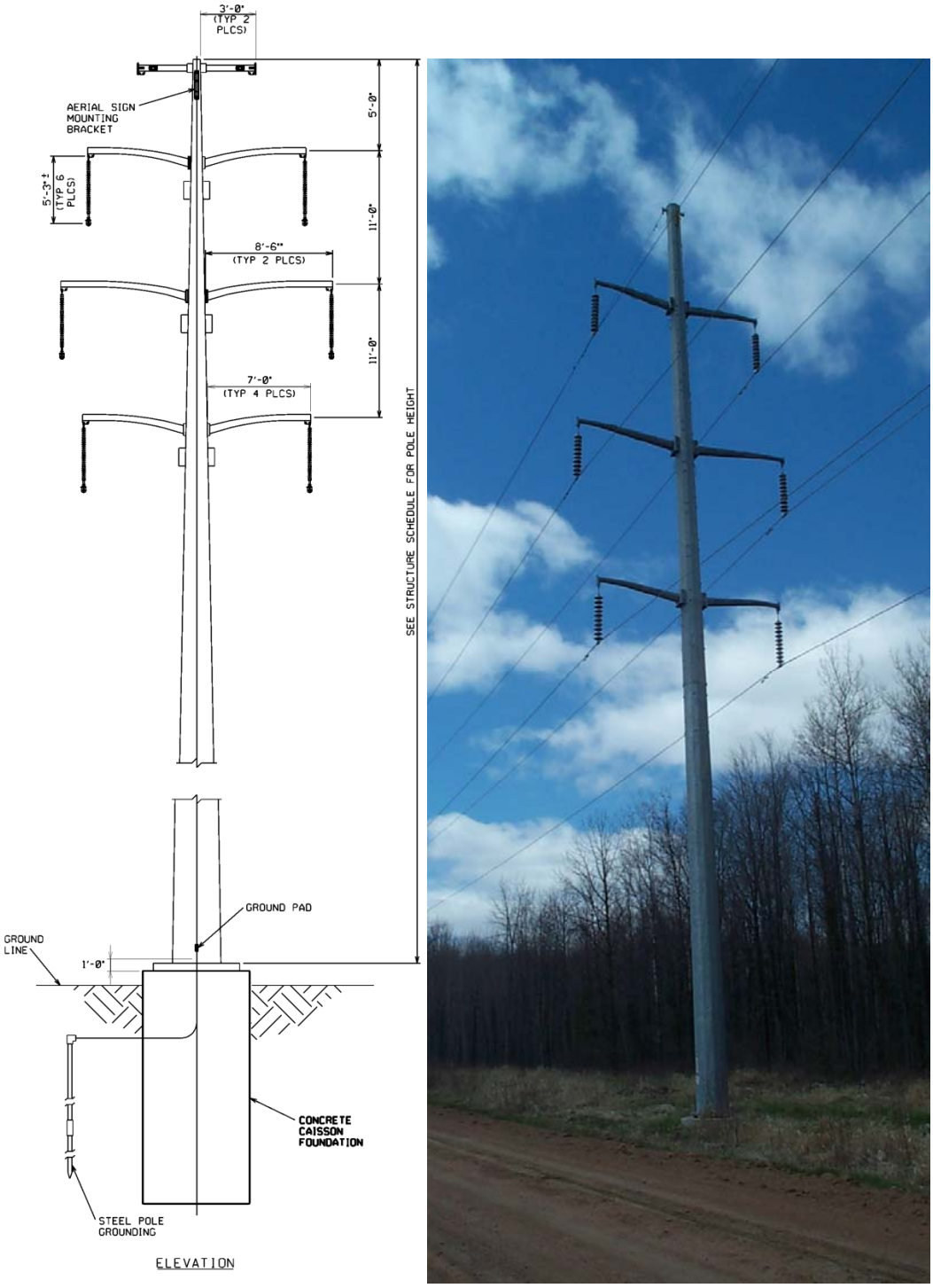

Figure 6: Double Circuit Dead-End Structure

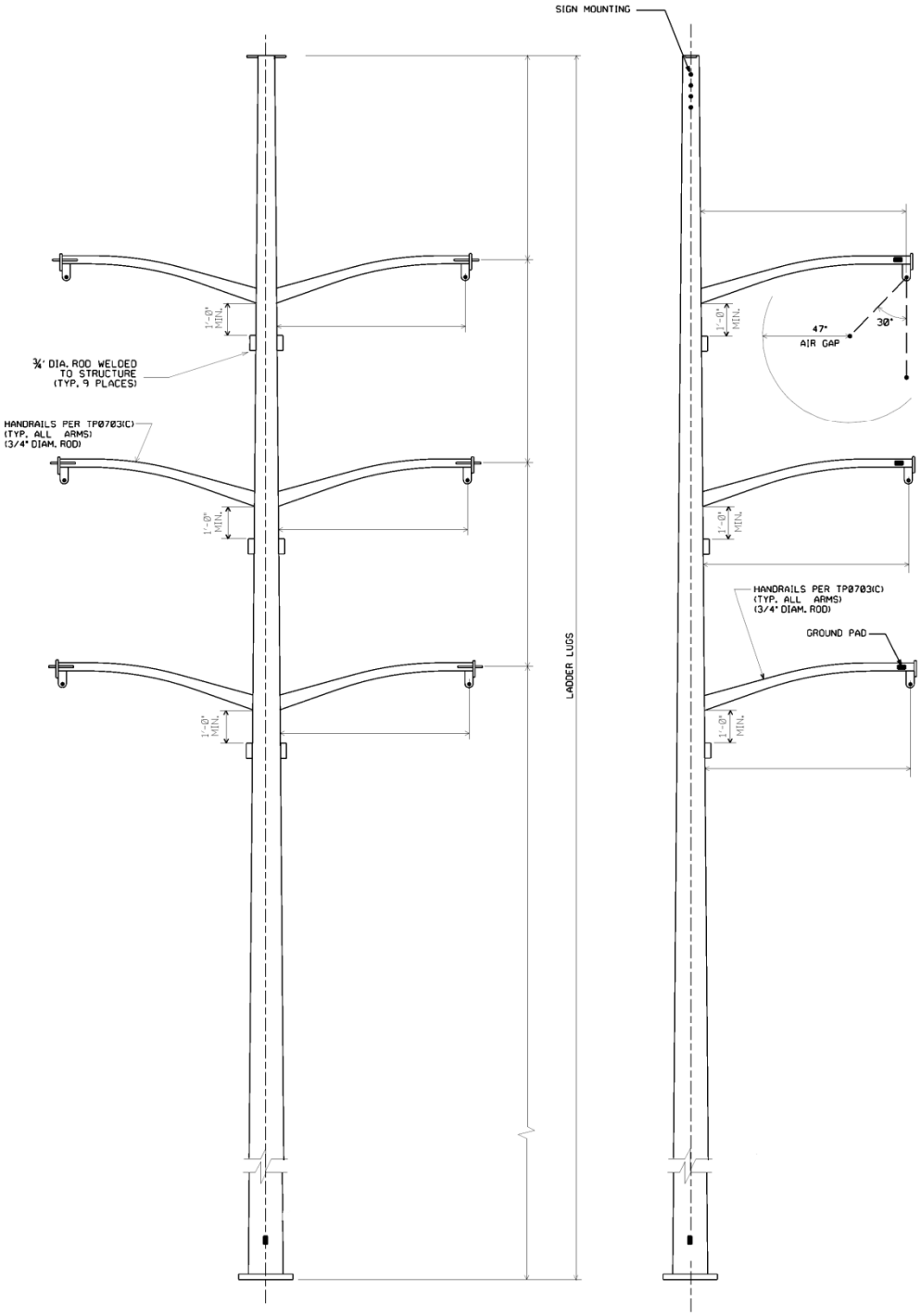

Figure 7 summarizes the structure designs and foundation for Route A.

Figure 7: Route A—Alignment 1 Double Circuit Structure Design Summary

Project Component	Line Voltage	Structure Type	Pole Type	Conductor	Foundation	Average Span Length	Average Height	Maximum Height
Tangent	115 kV	Typical	Steel	795 kcmil 26/7 ACSR	Drilled Pier	500 feet	75 feet	110 feet
Dead-End	115 kV	Crossing	Steel	795 kcmil 26/7 ACSR	Drilled Pier and/or Driven Pile	500 feet	80 feet	115 feet

For the underground alignments on Route A—Alignment A2 and Alignment A3, Xcel Energy proposes to install two identical concrete duct banks containing four 6-inch polyvinyl chloride ("PVC") conduits for the transmission circuits, and two 2-inch PVC conduits for ground continuity and communication needs. The duct banks are anticipated to be installed adjacent to each other in the same trench unless a different design is dictated by the physical limitations of the route. Cable vaults with manhole access will be required approximately every 1,500 feet and at major changes in direction in the route to facilitate the installation of the cable as well as for future inspection and repairs. The amount of right-of-way required for the underground design for Route A—Alignment A2 and Alignment A3 is 30 feet, or 15 feet on each side of the transmission line centerline.

The proposed cable is a high voltage extruded dielectric ("HVED") cable, 3000 kcmil. HVED cable consists of stranded copper conductor surrounded by a solid electrostatic conductor shield and insulation. The outermost layers consist of an insulation shield and moisture block and cable shield covered by a layer of polyethylene protective jacket.

Figure 8 and Figure 9 illustrate underground ducts and vaults.

Figure 8: Underground Duct Section

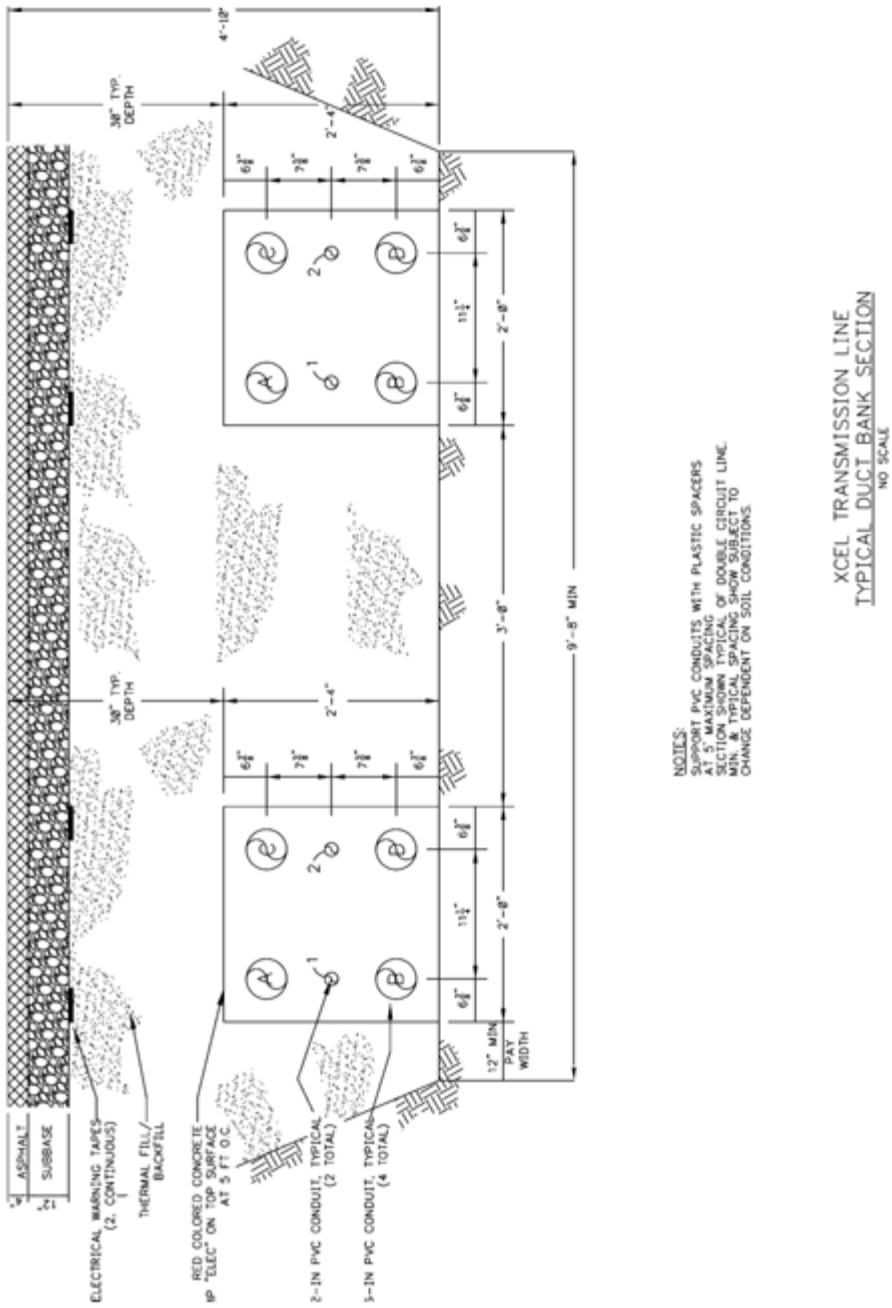

Figure 9: Underground Cable Vault

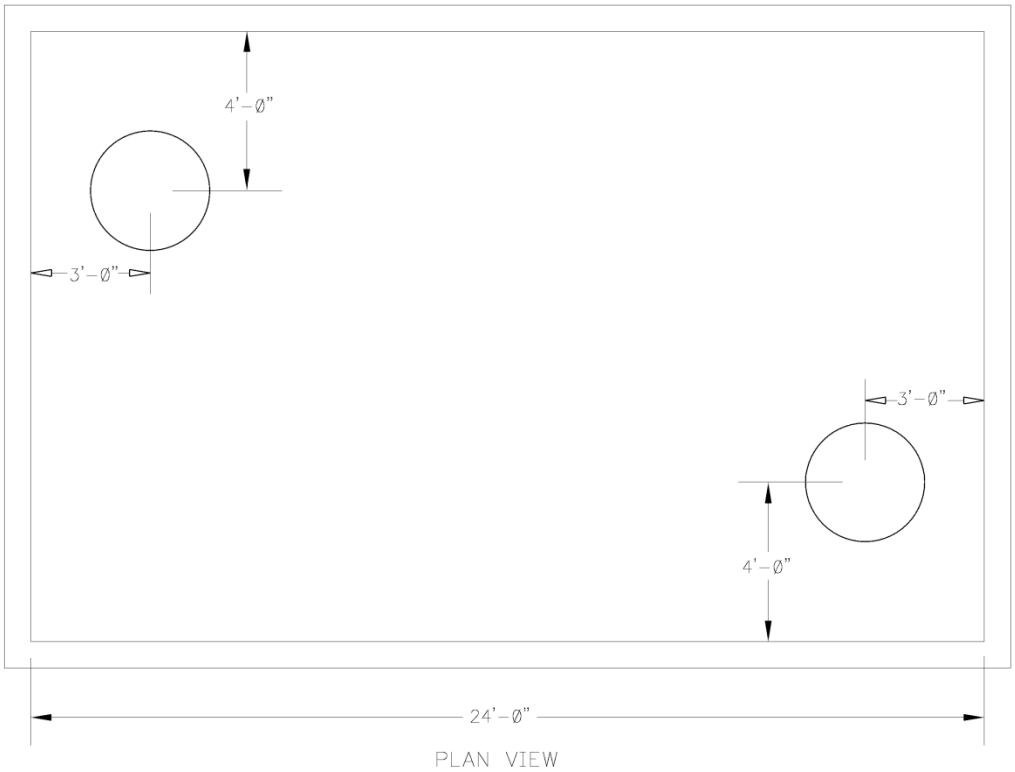

STREET MANHOLE
(14' WIDE X 24' LONG X 7'-6" HIGH)
NO SCALE

Details regarding construction techniques for underground transmission facilities are provided in Chapter 6.

2.1.2.2 OTHER ROUTES EVALUATED IN ROUTE PERMIT PROCEEDING

Overhead Design Single Circuit Route B and Route C

Routes B and C are street routes for two single circuit overhead 115 kV transmission lines. Route B follows 26th Street (1.8 miles) and 28th Street (1.5 miles). Route C follows 28th Street (1.5 miles) and 31st Street (2.3 miles). The same transmission line design for the facilities is proposed along both routes.

For Route B or Route C, a cantilever design is proposed. This design would require the installation of a single pole transmission structure with all davit arms and conductors installed on the side of the pole overhanging the public road or public

right-of-way. The National Electric Safety Code ("NESC") clearance requirements dictate a 25-foot right-of-way clearance on the side of the pole with the installed davit arms. There is no NESC safety clearance minimum required for the side of the pole without the cantilevered arms and conductors. Xcel Energy will seek 25-feet of right-of-way on the street side and may seek to acquire a right-of-way on the non-arm side of the poles for access and maintenance of the structures up to 25 feet where feasible. Xcel Energy will work to minimize the right-of-way needed from private landowners to the extent possible.

The poles would be approximately 75-feet tall and typical spans will be 500 feet. The proposed conductor is 795 kcmil, 26/7 ACSR, or conductor of similar capacity.

Figure 10: Single Circuit Tangent Structure

(Also depicts direct embedded steel pole installation)

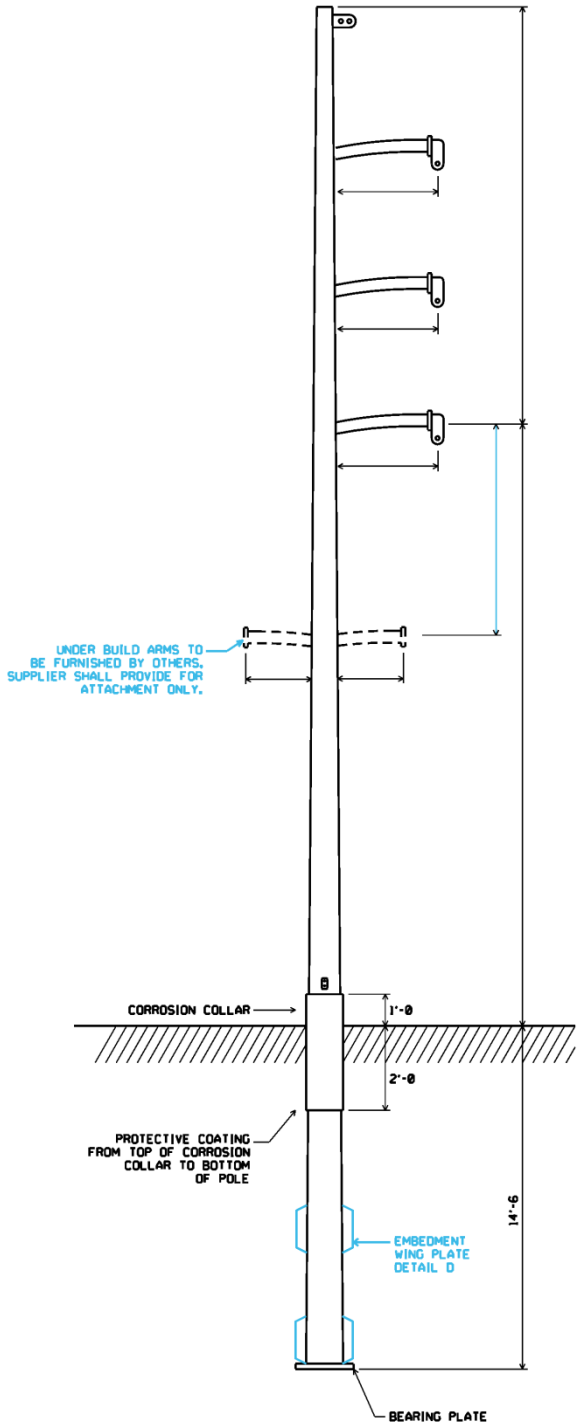

Figure 11: Single Circuit Dead-End 90 Degree Corner Structure

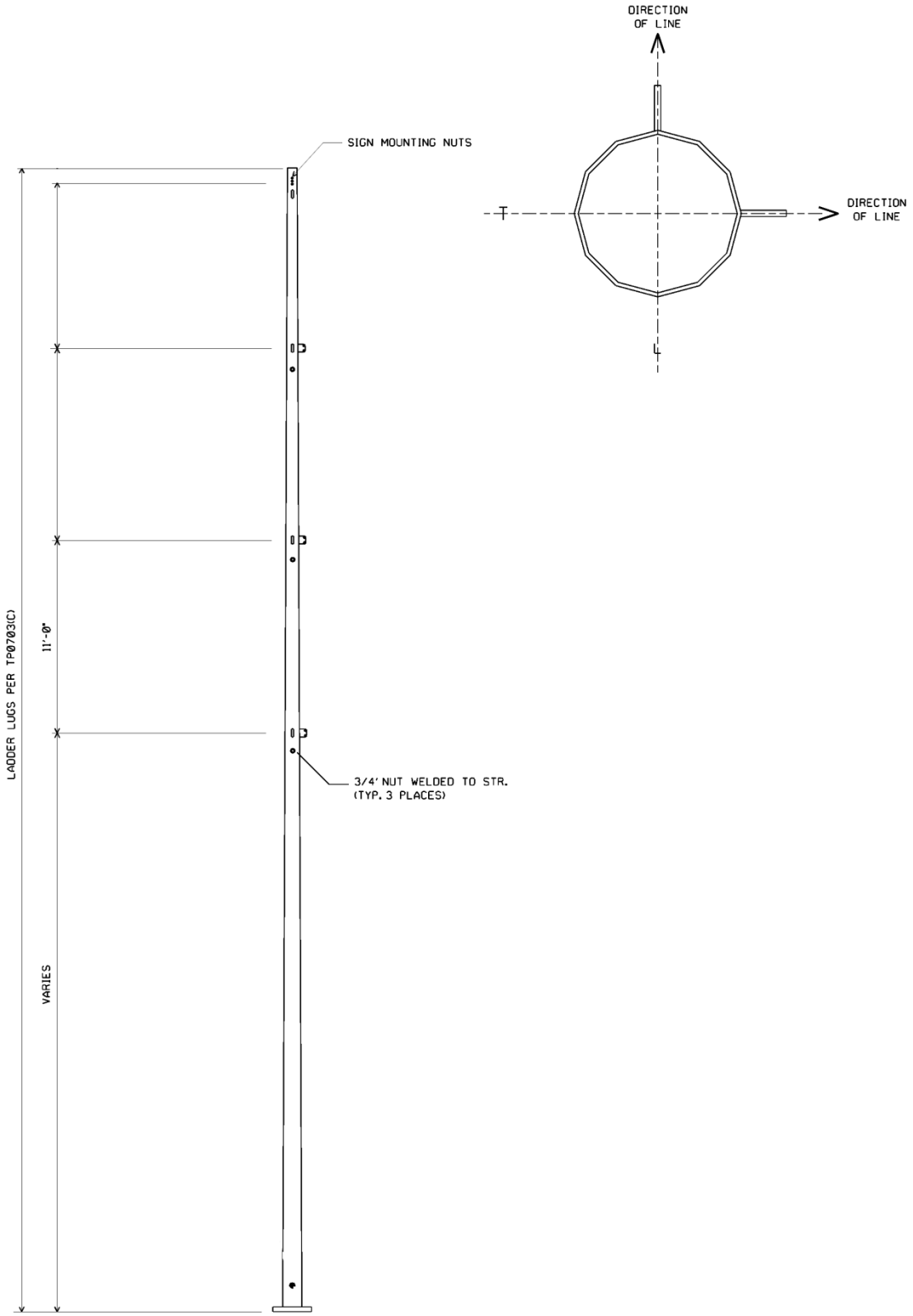

Figure 12: Subgrade Foundation

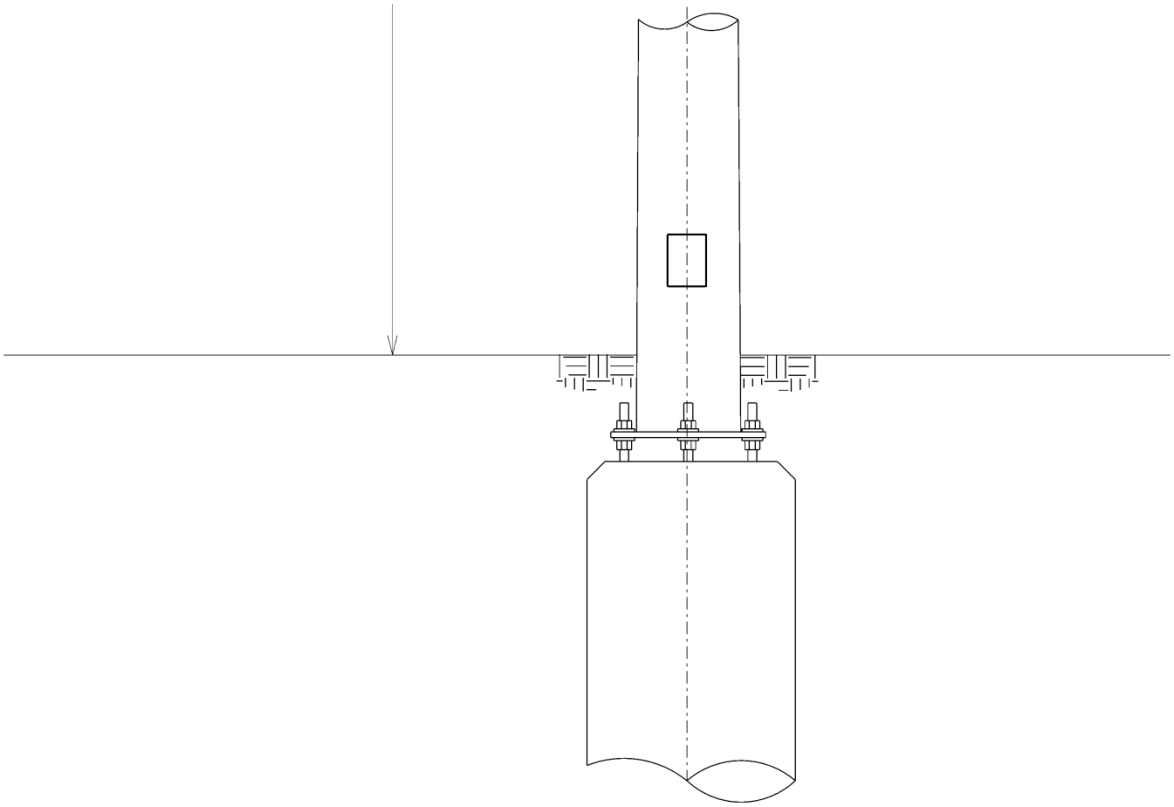

Figure 13 summarizes the structure and foundation designs for the line if constructed along Route B or Route C:

Figure 13: Route B and Route C, Single Circuit Structure Design Summary

Project Component	Line Voltage	Structure Type	Pole Type	Conductor	Foundation	Average Span Length	Average Height
Tangent	115 kV	Typical	Steel	795 kcmil 26/7 ACSR	Drilled Pier or Direct Imbed	500 feet	75 feet
Dead-End	115 kV	Crossing	Steel	795 kcmil 26/7 ACSR	Drilled Pier	500 feet	100 – 110 feet

EXHIBIT B

Amps and MVA for Line Configurations and Specifications

Direct Testimony of Larry L. Schedin, Attachment J
CapX 2020 Certificate of Need
PUC Docket E002, ET2/CN-06-1115

☐ **Non Public Document – Contains Trade Secret Data**
☐ **Public Document – Trade Secret Data Excised**
☒ **Public Document**

Xcel Energy
Docket No.: E002, ET2/CN-06-1115
Response To: Elizabeth Goodpaster and Mary Marrow MCEA/Wind on the Wires — Information Request No. 3
Date Received: March 27, 2008

Question:

With reference to the Application Volume I, Sec. 2.4 (pages 2.9) entitled "Transmission Line Characteristics" and Applicants' response to DOC/OES Information Rquest No. 2, please provide thermal MVA ratings, surge impedance loadings (SIL), MVA and thermal ampere capacity ratings (amplacities) under summer normal, summer emergency, winter normal and winter emergency conditions for the following conductors and voltages:

(a) Single 795ACSR, 115 KV
(b) Single 795 ACSS, 115 KV
(c) Twin bundled 795 ACSR, 115 KV
(d) Twin bundled 795 ACSS, 115 KV
(e) Single 954 ACSS, 115 KV
(f) Single 795 ACSS, 161 KV
(g) Single 954 ACSS, 161 KV
(h) Single 795 ACSR, 230 KV
(i) Single 795 ACSS, 230 KV
(j) Single 954 ACSS, 230 KV
(k) Twin bundled 795 ACSR, 345 KV
(l) Twin bundled 954 ACSS, 345 KV
(m) Triple bundled 954 ACSS, 500 KV
(n) Triple bundled conductor as used on the Forbes – Chisago 500 KV line

In your response, please define the conditions for summer normal, summer emergency, winter normal and winter emergency conditions (ambient temp, wind speed, degree rise, allowable sag. etc.), and specify the regulatory authority setting the foregoing standards and the reference to applicable rules.

Response:

The thermal ratings of the requested conductors and voltages are noted in the table below. Conductor ratings are based on the "IEEE Standard for calculation of Bare Overhead Conductor Temperature and Ampacity Under Steady-State Conditions," ANSI/IEEE Standard 738. Alcoa SAG10 Ratekit was used to calculate conductor ratings.

A regulatory authority does not set the conductor steady state thermal rating variables. The CapX2020 Member Utilities Transmission Line Standards Committee ("Committee") developed the conductor steady state thermal rating variables for summer ratings based upon member utilities' standard of practice..

The summer steady state thermal rating variables are as follows:

- Conductor orientation relative to north: 90 degrees
- Atmosphere: Clear
- Air Temperature: 40 degrees C for Summer
- Wind Speed: 2 ft/sec
- Wind angle relative to conductor: 90 degrees
- Elevation above sea level: 1000 ft
- Latitude: 45 degrees N
- Date: July 8
- Solar time: 12 hours
- Coefficient of emissivity: 0.7
- Coefficient of absorption: 0.9
- 200 degrees C maximum operating temperature for ACSS
- 100 degrees C maximum operating temperature for ACSR

The Committee defined the Emergency Line Rating as equal to the steady state thermal rating.

The Committee specified that conductors meet minimum clearances to ground based upon voltage and nature of surface under the conductor (*i.e.*, roads, interstate highway, railroads, etc.). The minimum specified clearances were chosen to assure that the final constructed lines meet or exceed the National Electrical Safety Code ("NESC") minimum clearances. Conductor sags are to be calculated based upon conductor size, conductor temperature, span length, design tension, structure heights and loading conditions. Vertical clearances shall be applied to the greatest sag resulting from either the maximum operating temperature of 200°C (for the ACSS

conductor) and 100°C (for the ACSR conductor) or the maximum loaded condition (ice plus wind).

Conductor	**Summer Thermal Ampacity Rating**	**Summer Thermal MVA Rating**
Single 795 kcm 26/7 ACSR, 115 KV	965 amps	192 MVA
Single 795 kcm 26/7 ACSS, 115 KV	1655 amps	330 MVA
Twin bundled 795 kcm 26/7 ACSR, 115 KV	1930 amps	384 MVA
Twin bundled 795 kcm 26/7 ACSS, 115 KV	3310 amps	659 MVA
Single 954 kcm 54/19 ACSS, 115 KV	1850 amps	368 MVA
Single 795 kcm 26/7 ACSS, 161 KV	1655 amps	462 MVA
Single 954 kcm 54/19 ACSS, 161 KV	1850 amps	516 MVA
Single 795 kcm 26/7 ACSR, 230 KV	965 amps	384 MVA
Single 795 kcm 26/7 ACSS, 230 KV	1655 amps	659 MVA
Single 954 kcm 54/19 ACSS, 230 KV	1850 amps	737 MVA
Twin bundled 795 kcm 26/7 ACSR, 345 KV	1930 amps	1153 MVA
Twin bundled 954 kcm 54/19 ACSS, 345 KV	3700 amps	2211 MVA
Triple bundled 954 kcm 54/19 ACSS, 500 KV	5550 amps	4806 MVA
Triple bundled conductor as used on the Forbes – Chisago 500 KV line (Triple bundled 1192.5 kcm 45/7 ACSR)	3648 amps	3159 MVA

The Committee did not develop steady state thermal rating variables for winter ratings. Xcel Energy – NSP Operating Territory uses 0°C for the winter rating air temperature for calculating the rating during the winter operating season of November 1 to April 30. The April 30 date produces the lowest allowable line rating of the winter rating period, so it is used in the following table. The April 30 date and 0°C air temperature were used in conjunction with the other steady state thermal

rating variables developed by the Committee to develop the following winter rating table.

The winter steady state thermal rating variables used for the following Xcel Energy – NSP Operating Territory/ CAPX2020 Member Utilities Transmission Line Standards Committee rating table are as follows:

- Conductor orientation relative to north: 90 degrees
- Atmosphere: Clear
- Air Temperature: 0 degrees C for Winter
- Wind Speed: 2 ft/sec
- Wind angle relative to conductor: 90 degrees
- Elevation above sea level: 1000 ft
- Latitude: 45 degrees N
- Date: April 30
- Solar time: 12 hours
- Coefficient of emissivity: 0.7
- Coefficient of absorption: 0.9
- 200 degrees C maximum operating temperature for ACSS
- 100 degrees C maximum operating temperature for ACSR

Conductor	**Winter (April 30) Thermal Ampacity Rating**	**Winter (April 30) Thermal MVA Rating**
Single 795 kcm 26/7 ACSR, 115 KV	1286 amps	256 MVA
Single 795 kcm 26/7 ACSS, 115 KV	1819 amps	362 MVA
Twin bundled 795 kcm 26/7 ACSR, 115 KV	2572 amps	512 MVA
Twin bundled 795 kcm 26/7 ACSS, 115 KV	3638 amps	725 MVA
Single 954 kcm 54/7 ACSS, 115 KV	2032 amps	405 MVA
Single 795 kcm 26/7 ACSS, 161 KV	1819 amps	507 MVA
Single 954 kcm 54/7 ACSS, 161 KV	2032 amps	567 MVA
Single 795 kcm 26/7 ACSR, 230 KV	1286 amps	512 MVA

Conductor	**Winter (April 30) Thermal Ampacity Rating**	**Winter (April 30) Thermal MVA Rating**
Single 795 kcm 26/7 ACSS, 230 KV	1819 amps	725 MVA
Single 954 kcm 54/7 ACSS, 230 KV	2032 amps	809 MVA
Twin bundled 795 kcm 26/7 ACSR, 345 KV	2572 amps	1537 MVA
Twin bundled 954 kcm 54/7 ACSS, 345 KV	4064 amps	2428 MVA
Triple bundled 954 kcm 54/7 ACSS, 500 KV	6096 amps	5279 MVA
Triple bundled conductor as used on the Forbes – Chisago 500 KV line (Triple bundled 1192.5 kcm 45/7 ACSR)	4875 amps	4222 MVA

Surge Impedance

The following table shows typical ranges of surge impedances found on the CapX2020 member systems. Designs for the proposed CapX2020 transmission lines are not far enough along to provide more accurate surge impedances for these lines.

Conductor Configuration	**Surge Impedance**
Single Bundled Conductor – 115, 161 & 230 KV Configurations a, b, f & h	350 – 375 Ohms
Twin bundled Conductor - 115 KV Configurations c & d	250 - 300 Ohms
Twin bundled Conductor - 345 KV Configurations k & l	270 –285 Ohms
Triple bundled Conductor - 500 kV Configuration n	250 – 300 Ohms
Configurations e, g, i, j and m	Not Used

Response By:	Brad Hill/David K. Olson
Title:	Principal Specialty Engineer
Department:	Transmission Engineering/Substation Engineering
Company:	Xcel Energy
Telephone:	612-330-6826/612-330-5909
Date:	April 21, 2008

2157846v1

EXHIBIT C

Applicant Magnetic Field Calculations

Figure 41: Calculated Magnetic Flux Density for Proposed 115 kV Transmission Line Designs
Hiawatha Project Certificate of Need Application

Figure 41: Calculated Magnetic Flux Density (milligauss) for Proposed 115 kV Transmission Line Designs (1 meter or 3.28 feet above ground)

Route	Structure Type	System Condition	Current (Amps)	Distance to Proposed Centerline										
				-200'	-100'	-75'	-50'	-25'	0'	25'	50'	75'	100'	200'
B & C	Horizontal Post 115kV Single Circuit	Peak	230	0.67	2.24	3.50	6.07	12.11	26.16	26.25	12.18	6.10	3.51	0.86
		Average	138	0.42	1.41	2.20	3.82	7.63	16.49	16.54	7.68	3.84	2.21	0.54
A	Davit Arm 115kV/115kV Steel Pole Double Circuit	Peak	230	0.22	1.49	3.13	7.88	23.03	38.44	22.77	7.73	3.05	1.44	0.21
		Average	138	0.13	0.90	1.79	4.73	13.82	23.06	13.66	4.64	1.72	0.87	0.13
A & D (3000 kcmil)	Transmission Duct Bank 115kV/115kV Under ground Double Circuit	Peak	230	0.00	0.01	0.03	0.11	0.84	13.08	0.85	0.11	0.03	0.01	0.00
		Average	138	0.00	0.01	0.02	0.07	0.51	7.85	0.51	0.07	0.02	0.01	0.00
A & D (1250 kcmil)	Transmission Duct Bank 115kV/115kV Under ground Double Circuit	Peak	230	0.00	0.01	0.02	0.05	0.37	19.67	0.37	0.05	0.01	0.01	0.00
		Average	138	0.00	0.00	0.01	0.03	0.22	11.80	0.22	0.03	0.01	0.00	0.00

EXHIBIT D

McKay Magnetic Field Calculations

\Calculated Magnetic Field Tables for Proposed 115 kV Transmission Line Designs

STEP 1

THIS TABLE CONTAINS THE COLUMN HEADINGS AND DATA FROM THE TOP ENTRIES IN THE TABLE FROM EXHIBIT C

Figure 41:
CALCULATED MAGNETIC FLUX DESNITY (MILLIGAUSSS) FOR PROPOSED 115KV TRANSMISSION LINE
DESIGNS (1 METER OR 3.28 FEET ABOVE GROUND)

Route	Structure Type	System Condition	Current (Amps)	Distance to Proposed Centerline -200'	-100'	-75'	-50'	-25'	0'	25'	50'	75'	100'	200'
B & C	Horizontal Post 115kV Single Circuit	Peak	230.00	0.67	2.24	3.50	6.07	12.11	26.16	26.25	12.18	6.10	3.51	0.86
		Average	138.00	0.42	1.41	2.20	3.82	7.63	16.49	16.54	7.68	3.84	2.21	0.54
A	Davit Arm 115kV/115kV Steel Pole Double Circuit	Peak	230.00	0.22	1.49	3.13	7.88	23.03	38.44	22.77	7.73	3.05	1.44	0.21
		Average	138.00	0.13	0.90	1.79	4.73	13.82	23.06	13.66	4.64	1.72	0.87	0.13

STEP 2- Routes B & C	
MVA CALCULATED FROM THE CURRENTS IN TABLE Figure 41:	
115.00	kV
230.00	Amps PEAK ESTIMATED
1.73	3 Phase
45.76	MVA PEAK CALCULATED
115.00	kV
138.00	Amps AVERAGE ESTIMATED
1.73	3 Phase
27.46	MVA AVERAGE CALCULATED

STEP 2- Route A	
MVA CALCULATED FROM THE CURRENTS IN TABLE Figure 41:	
115.00	kV
230.00	Amps PEAK ESTIMATED
1.73	3 Phase
45.76	MVA PEAK CALCULATED
115.00	kV
138.00	Amps AVERAGE ESTIMATED
1.73	3 Phase
27.46	MVA AVERAGE CALCULATED

STEP 4

THIS TABLE CONTAINS DATA SCALED FROM THE TABLE ABOVE USING CURRENTS CALCULATED IN STEP 3

Figure 41:
CALCULATED MAGNETIC FLUX DESNITY (MILLIGAUSSS) FOR PROPOSED 115KV TRANSMISSION LINE
DESIGNS (1 METER OR 3.28 FEET ABOVE GROUND)

Route	Structure Type	System Condition	Current (Amps)	Distance to Proposed Centerline -200'	-100'	-75'	-50'	-25'	0'	25'	50'	75'	100'	200'
B & C	Horizontal Post 115kV Single Circuit	Peak	965.07	2.81	9.40	14.69	25.47	50.81	109.77	110.14	51.11	25.60	14.73	3.61
		Average	723.80	2.20	7.40	11.54	20.04	40.02	86.49	86.75	40.28	20.14	11.59	2.83
A	Davit Arm 115kV/115kV Steel Pole Double Circuit	Peak	1930.13	1.85	12.50	26.27	66.13	193.27	322.58	191.08	64.87	25.60	12.08	1.76
		Average	1447.60	1.36	9.44	18.78	49.62	144.97	241.90	143.29	48.67	18.04	9.13	1.36

STEP 3- Routes B & C	
CURRENT CALCULATED FROM MVA DESIGN CAPACITY:	
192.00	*MVA PEAK DESIGN
115.00	kV
1.73	3 Phase
965.07	Amps PEAK CALCULATED
144.00	**MVA AVERAGE DESIGN
115.00	kV
1.73	3 Phase
723.80	Amps AVERAGE CALCULATED

STEP 3- Route A	
CURRENT CALCULATED FROM MVA DESIGN CAPACITY:	
384.00	*MVA PEAK DESIGN
115.00	kV
1.73	3 Phase
1930.13	Amps PEAK CALCULATED
288.00	**MVA AVERAGE DESIGN
115.00	kV
1.73	3 Phase
1447.60	Amps AVERAGE CALCULATED

NOTES:
1. MVA = (kV * Amps * 1.73) /1000
2. Amps = (MVA * 1000) / (kV * 1.73)
3. For a given physical and electrical configuration, milligauss at one location is proportional to current (Amps) (for example, double the current and the milligauss level also doubles).
4. For a given physical and electrical configuration and constant current, the milligauss level changes as the inverse square of the distance from away from the source (for example, move 2 times as far away and the milligauss level decreases to 1/4 of what it was).

*. MVA PEAK DESIGN CAPACITY IS FROM A COMBINATION OF THE DATA PRESENTED IN EXHIBITS A, B, AND C.

**. MVA AVERAGE DESIGN CAPACITY WAS CHOSEN TO BE ABOUT 75% OF PEAK DESIGN CAPACITY