MALCOLM PIRNIE

Preliminary Foundation Design

E

APPENDIX

E

APPENDIX

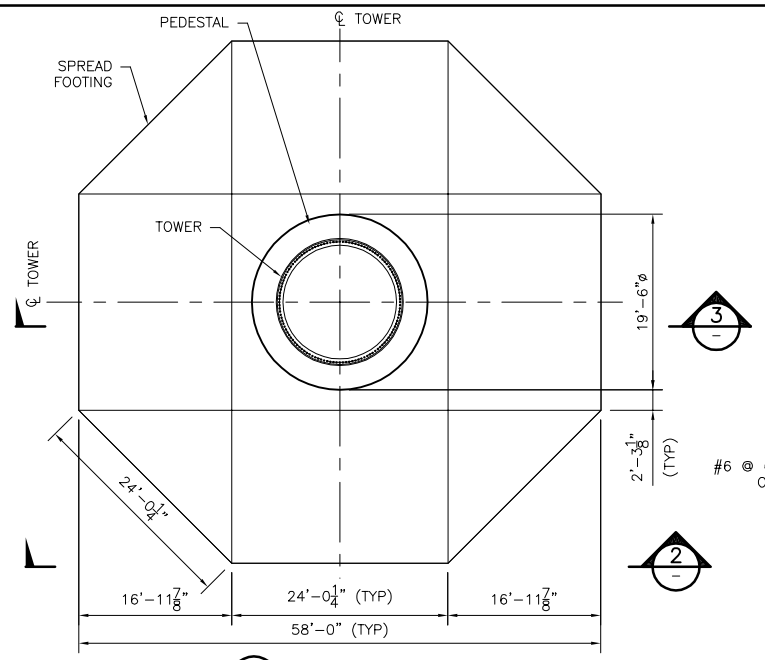

1 PLAN: TOWER FOUNDATION
3/32"=1'-0"
0' 5' 10' 20' 30'
SCALE

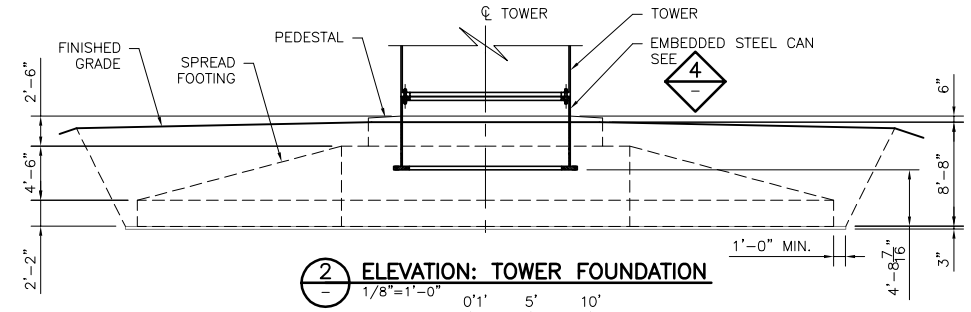

2 ELEVATION: TOWER FOUNDATION
1/8"=1'-0"
0'1' 5' 10'
SCALE

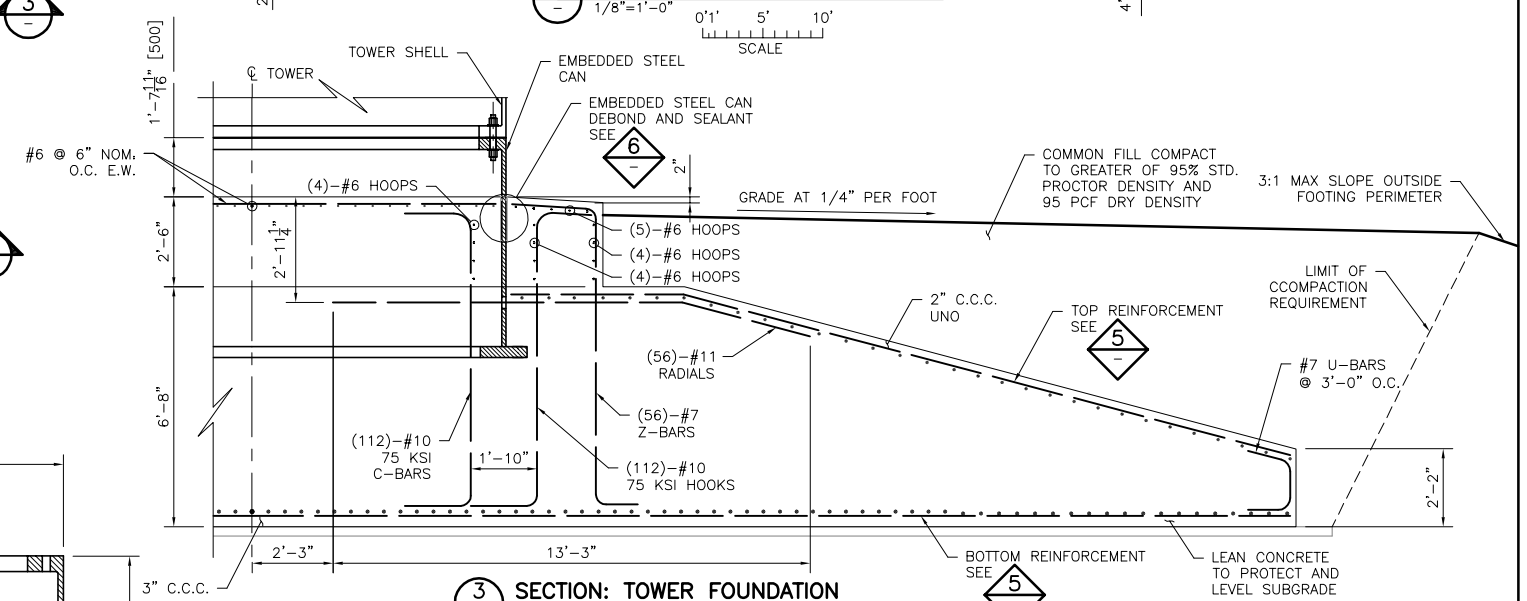

3 SECTION: TOWER FOUNDATION
3/8"=1'-0"
0' 2' 4' 6'
SCALE IN FEET

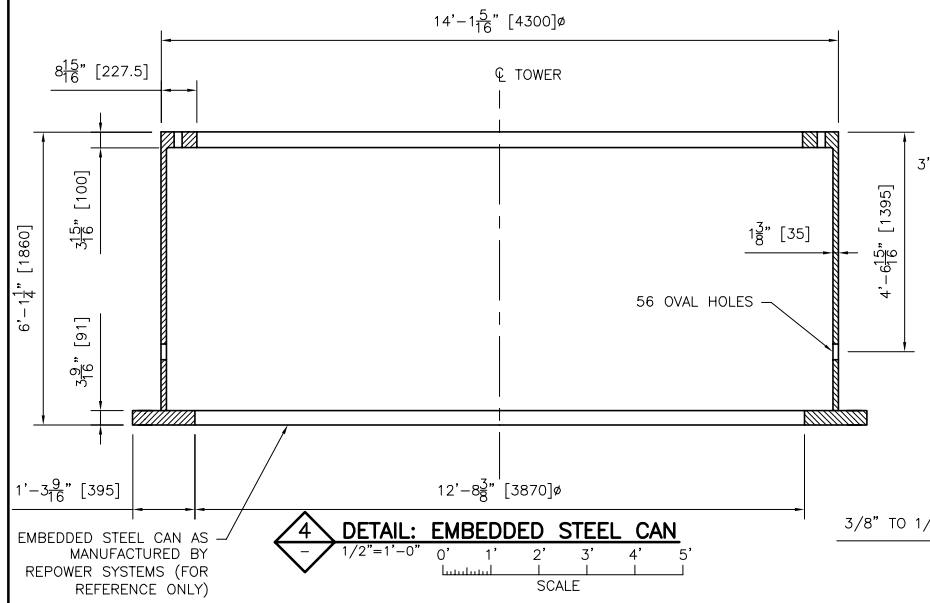

4 DETAIL: EMBEDDED STEEL CAN
1/2"=1'-0"
0' 1' 2' 3' 4' 5'
SCALE

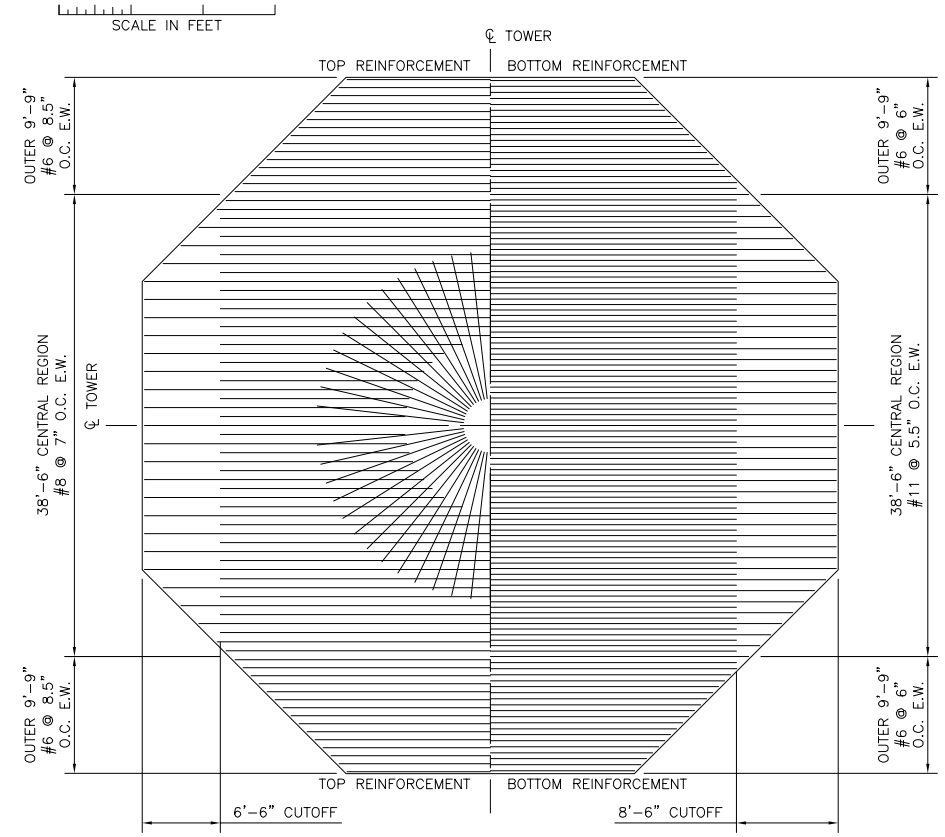

5 DETAIL: TOP & BOTTOM REINFORCEMENT
1/8"=1'-0"
0'1' 5' 10'
SCALE

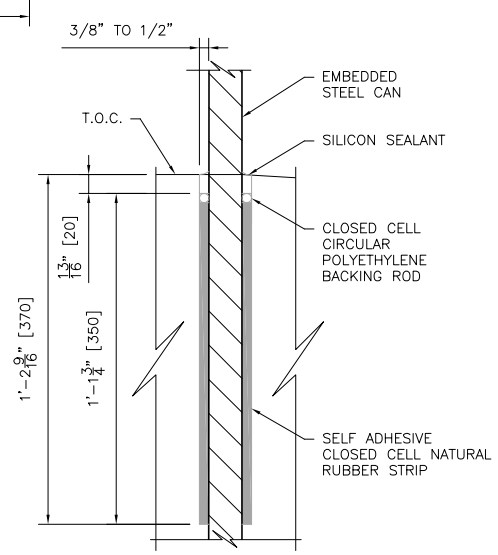

6 DETAIL: EMBEDDED STEEL CAL DEBOND AND SEALANT
3"=1'-0"
0" 3" 6" 9" 1'
SCALE

NOT FOR CONSTRUCTION

BUILDING AND DESIGN CODES:

INTERNATIONAL BUILDING CODE 2006, INTERNATIONAL CONFERENCE OF BUILDING OFFICIALS.

BUILDING CODE REQUIREMENTS FOR STRUCTURAL CONCRETE, ACI 318, 2008, AMERICAN CONCRETE INSTITUTE.

WIND TURBINE AND TOWER:

MANUFACTURER: REPOWER
MODEL: MM92
POWER OUTPUT: 2.05 MW
ROTOR DIAMETER: 92m
TURBINE HUB HEIGHT: 100m

DESIGN SERVICE LOADS:

UNFACTORED SERVICE LOADS DUE TO EXTREME WIND CONDITION CLASS IEC–IIA:

OVERTURNING MOMENT, Mxy = 75,607 kN–m = 55,765 ft–kips
HORIZONTAL BASE SHEAR, Hxy = 908 kN = 204 kips
VERTICAL TOWER LOAD, Wz = 2984 kN = 671 kips

FOUNDATION DESIGN DATA:

MIN. FACTOR OF SAFETY AGAINST OVERTURNING: >1.5
MIN. FACTOR OF SAFETY AGAINST SLIDING: >1.5
MIN. FACTOR OF SAFETY AGAINST BEARING CAPACITY FAILURE: >2.26 ON EXTREME

REFERENCE DOCUMENTS:

1. REPOWER SYSTEMS AG, "WIND TURBINE REPOWER MM92 DIBt(2004) WZ II IEC 3a SPECIFICATION FOR FOUNDATION DESIGN", DOCUMENT NO. T–2.9–RT.00.03–A, VERSION D, DATED 2008–02–28.

MIN. 28–DAY COMPRESSIVE STRENGTH OF CONCRETE:
5000 PSI

MIN. YIELD POINT STRENGTH OF REINFORCING BAR:
60 KSI U.N.O.

VOLUME OF FOUNDATION AS DIMENSIONED:
513 CUBIC YARDS

ESTIMATED STEEL WEIGHT OF REINFORCING:
43 TONS

MAX. AGGREGATE SIZE:
1.5 INCHES W/ 85%–95% PASSING THE 1" SIEVE

MIN. REQUIRED BEARING CAPACITY:
4000 PSF

ABBREVIATIONS:

B.O.	BOTTOM OF	O.C.	ON CENTER
C.C.C.	CLEAR CONCRETE COVER	O.D.	OUTSIDE DIAMETER
℄	CENTER LINE	R	RADIUS
EL.	ELEVATION	T&B	TOP AND BOTTOM
E.W.	EACH WAY	T.O.C.	TOP OF CONCRETE
EX.	EXISTING	TYP	TYPICAL
I.D.	INSIDE DIAMETER	UNO	UNLESS NOTED OTHERWISE
MIN.	MINIMUM	W/	WITH
NOM.	NOMINAL	ø	DIAMETER

CONFIDENTIAL

THIS DRAWING IS THE PROPERTY OF BARR ENGINEERING COMPANY (BARR) LAKE COUNTRY WIND ENERGY, LLC (LAKE COUNTRY). NO OTHER USE IS PERMITTED WITHOUT THE WRITTEN PERMISSION OF BARR AND LAKE COUNTRY. ALL RIGHTS OF DESIGN OR INVENTION ARE RESERVED.

NO.	BY	CHK.	APP.	DATE	REVISION DESCRIPTION
A	CMM3	MBJ	JXB	03/19/10	PRELIMINARY DESIGN

I HEREBY CERTIFY THAT THIS ENGINEERING DOCUMENT WAS PREPARED BY ME OR UNDER MY DIRECT PERSONAL SUPERVISION AND THAT I AM A DULY REGISTERED PROFESSIONAL ENGINEER UNDER THE LAWS OF THE STATE OF MINNESOTA.

SIGNATURE _____
PRINTED NAME _____
DATE _____ REG. NO. _____

RELEASED TO/FOR	A	0	1	2	3	4	5
CLIENT	03/19						
BID							
CONSTRUCTION							
DATE RELEASED							

BARR
Corporate Headquarters: Minneapolis, Minnesota Ph: 1–800–632–2277

Project Office:
BARR ENGINEERING CO.
4700 WEST 77TH STREET
MINNEAPOLIS, MN.
55435–4803
Ph: 1–800–632–2277
Fax: (952) 832–2601
www.barr.com

Scale	AS SHOWN
Date	03/16/2010
Drawn	CMM3
Checked	MBJ
Designed	CMM3
Approved	JXB

LAKE COUNTRY WIND ENERGY, LLC
MINNEAPOLIS, MINNESOTA

LAKE COUNTRY WIND PROJECT
MEEKER & KANDIYOHI COUNTIES, MINNESOTA

SPREAD FOOTING FOUNDATION
PLAN, ELEVATION, SECTION & DETAILS

BARR PROJECT No. 23/47–1004
CLIENT PROJECT No. –
DWG. No. S–01
REV. No. A

cmm3 M:\cad\23471004\Lake Country S-01 Rev A.dwg Plot at 1 03/19/2010 16:50:07