Buffalo Ridge Power Partners, LLC

Application for Site Permit
138 MW Bitter Root Wind Farm Project

Yellow Medicine and Lincoln Counties, Minnesota

Minnesota Public Utilities Commission
DOCKET NO. IP6684/WS-08-1448

In Partnership With Global Winds Harvest

Submitted: October 13, 2009

SUBMITTED BY

Peter K. Kennon
Project Developer
ACCIONA Energy North America
333 West Wacker Drive, Suite 1500
Chicago, IL 60606
Direct: (312)-673-3020
Email: pkennon@acciona-na.com

Joseph G. Sedarski
Westwood Professional Services, Inc.
7699 Anagram Drive
Eden Prairie, MN 55344
Direct: (952) 906-7405
Email: joe.sedarski@westwoodps.com

TABLE OF CONTENTS

1.0 INTRODUCTION 1
2.0 Applicant Information 2
2.1 The Applicant and Its Role in the Project 2
2.1.1 Buffalo Ridge Power Partners, LLC 2
2.1.2 ACCIONA Wind Energy USA LLC 2
2.1.3 ACCIONA 3
2.1.4 Global Winds Harvest 4
2.2 Interests in Other LWECS 4
3.0 Certificate of Need 4
4.0 State Policy 4
5.0 Proposed Site And Wind Characteristics 5
5.1 Site Boundary 5
5.2 Avoidance/Exclusion Areas 5
5.3 General Wind Characteristics 7
5.4 Specific Wind Characteristics in Project Area 7
5.4.1 Interannual Variation 8
5.4.2 Seasonal Variation 8
5.4.3 Diurnal Conditions 8
5.4.4 Atmospheric Stability 9
5.4.5 Hub Height Turbulence 9
5.4.6 Extreme Wind Conditions 9
5.4.7 Wind Speed Frequency Distribution 10
5.4.8 Wind Variation with Height 10
5.4.9 Spatial Wind Variation 10
5.4.10 Wind Rose 10
5.5 Other Meteorological Conditions 10
5.6 Other Wind Turbines in the Area 12
6.0 Wind Rights 12
7.0 Project Design 13
7.1 Project Layout 13
7.2 Turbine Description 13
7.2.1 Turbine Model 13
7.2.2 Turbine Spacing 15
7.2.3 Towers 17
7.2.4 Foundations 17
7.3 LWECS Electrical System 17
7.3.1 MISO Coordination 18
7.4 Associated Facilities 18
7.4.1 Substation 18
7.4.2 Access Road System 19
7.4.3 Operation and Maintenance Building 19
7.4.4 Permanent Meteorological Station 20
8.0 Environmental Analysis 20
8.1 Demographics 20
8.1.1 Description of Resources 20

8.1.2 Impacts ... 21
8.1.3 Mitigation ... 22
8.2 Noise ... 23
8.2.1 Description of Resources ... 23
8.2.2 Impacts ... 24
8.2.3 Mitigation ... 27
8.3 Visual Impacts ... 27
8.3.1 Description of Resources ... 27
8.3.2 Impacts ... 28
8.3.3 Mitigation ... 29
8.4 Public Services and Infrastructure ... 29
8.4.1 Description of Resources ... 29
8.4.2 Impacts ... 31
8.4.3 Mitigation ... 34
8.5 Cultural and Archaeological Resources ... 35
8.5.1 Description of Resources ... 35
8.5.2 Impacts ... 36
8.5.3 Mitigation ... 36
8.6 Recreational Resources ... 36
8.6.1 Description of Resources ... 36
8.6.2 Impacts ... 37
8.6.3 Mitigation ... 38
8.7 Public Health and Safety ... 38
8.7.1 Description of Resources ... 38
8.7.2 Impacts ... 39
8.7.3 Mitigation ... 40
8.8 Hazardous Materials ... 41
8.8.1 Description of Resources ... 41
8.8.2 Impacts ... 41
8.8.3 Mitigation ... 42
8.9 Effects on Land-Based Economics ... 42
8.9.1 Description of Resources ... 42
8.9.2 Impacts ... 43
8.9.3 Mitigation ... 44
8.10 Tourism and Community Benefits ... 46
8.10.1 Description of Resources ... 46
8.10.2 Impacts ... 46
8.10.3 Mitigation ... 46
8.11 Topography ... 46
8.11.1 Description of Resources ... 46
8.11.2 Impacts ... 47
8.11.3 Mitigation ... 47
8.12 Soils ... 47
8.12.1 Description of Resources ... 47
8.12.2 Impacts ... 47
8.12.3 Mitigation ... 48

8.13 Geologic and Groundwater Resources 48
8.13.1 Description of Resources 48
8.13.2 Impacts 49
8.13.3 Mitigative Measures 49
8.14 Surface Water and Floodplain Resources 50
8.14.1 Description of Resources 50
8.14.2 Impacts 50
8.14.3 Mitigation 50
8.15 Wetlands 52
8.15.1 Description of Resources 52
8.15.2 Impacts 53
8.15.3 Mitigation 53
8.16 Vegetation 54
8.16.1 Description of Resources 54
8.16.2 Impacts 56
8.16.3 Mitigation 56
8.17 Wildlife 57
8.17.1 Description of Resources 57
8.17.2 Impacts 59
8.17.3 Mitigative Measures 62
8.18 Rare and Unique Natural Resources 63
8.18.1 Description of Resources 63
8.18.2 Impacts 66
8.18.3 Mitigation 66
8.19 Summary of Preconstruction Inventories 67
9.0 Construction of the Project 67
9.1 Construction 67
10.0 Operation of the Project 70
11.0 Costs 73
12.0 Schedule 73
13.0 Energy Projections 74
14.0 Decommissioning and Restoration 74
15.0 Identification of Potential Permits/Approvals 75
16.0 References 78
17.0 Definitions and Acronyms 84

TABLES

Table 1-1: Project Location 1
Table 5-1: Avoidance/Exclusion Areas in Project Area 6
Table 5-2: Wind Climate Meteorological Stations 7
Table 5-3: Frequency of Stability Class 9
Table 5-4: Temperature and Precipitation 11
Table 7-1: Wind Turbine Characteristics 14
Table 8-1: Population and Economic Characteristics 21
Table 8-2: Noise Standards by Noise Area Classification 23
Table 8-3: Common Noise Sources and Levels 24
Table 8-4: Existing Daily Traffic Levels 30
Table 8-5: NWI Wetland Type and Acreage 52
Table 8-6: Land Use and Relative Abundance in Project Area 54
Table 10-1: Operations and Maintenance Plan 70
Table 15-1: Potential Permits and Approvals Required for Construction and Operation of the Proposed Facility 75

FIGURES

Figure 7-1: Schematic of ACCIONA Windpower 1.5 MW Turbine 16

EXHIBITS

Exhibit 1: Project Vicinity Map
Exhibit 2: Project Location Map
Exhibit 3: Preliminary Site Layout
Exhibit 4: Area Wind Speed Frequency
Exhibit 5: Area Wind Energy Rose
Exhibit 6: Existing Wind Turbine Locations
Exhibit 7: Typical Landscape within Project Area
Exhibit 8: Recreation, Wildlife and USFWS Areas Map
Exhibit 9: Annual Average Daily Traffic (AADT) Map
Exhibit 10: Land Cover Map
Exhibit 11: Farmland Map
Exhibit 12: Soils, Conservation Reserve Program Lands, and FEMA Floodplain Map
Exhibit 13: Digital Elevation Map
Exhibit 14: Surface Water Map
Exhibit 15a: National Wetland Inventory Map –Northern Portion of Project Area
Exhibit 15b: National Wetland Inventory Map – Southern Portion of Project Area
Exhibit 16: Rare Natural Features Map

APPENDICES

Appendix A: Summary of Long Term Variability of Wind Speed
Appendix B: Summary of Diurnal Variations of Wind Speed
Appendix C: Turbine Information

Appendix D: Agencies Contacted Regarding Project
Appendix E: Agency Correspondence and Responses
Appendix F: Wildlife Studies for the Bitter Root Wind Resource Area Yellow Medicine and Lincoln Counties, Minnesota

Project Name:	Bitter Root Project	
Project Location:	Lincoln County:	T113N, R46W, Sections 2,3,4 (Hansonville Township)
	Yellow Medicine County:	T114N, R46W, Sections 4-10, 15-17, 19-30, 32-36 (Fortier Township)
		T115N, R46W, Sections 31,32 (Florida Township)

Applicant: Buffalo Ridge Power Partners, LLC

Authorized Representative: Mr. Pete Duprey

Signature:

Contact: Mr. Peter K. Kennon

Address: 333 W. Wacker Drive, Suite 1500, Chicago, IL 60606

Phone: (312) 673-3020

Email: pkennon@acciona-na.com

Preparer of Application: Mr. Joseph G. Sedarski

Signature:

Company: Westwood Professional Services, Inc.

Address: 7699 Anagram Drive, Eden Prairie, MN 55344

Phone: (952) 937-5150

Fax: (952) 937-5822

Email: joe.sedarski@westwoodps.com

1.0 INTRODUCTION

Buffalo Ridge Power Partners, LLC (the "Applicant"), is a Delaware limited liability company formed for the purpose of developing a 138 megawatt (MW) wind project in Yellow Medicine and Lincoln Counties, Minnesota, called the Bitter Root Wind Farm Project ("Bitter Root Project", or, "Project").[1] Buffalo Ridge Power Partners is a joint venture of ACCIONA Wind Energy USA, LLC ("ACCIONA Wind Energy"), and Global Winds Harvest, LLC ("Global Winds"). Once constructed and commercially operable, however, the Applicant expects that the Project will be owned and operated exclusively by ACCIONA Wind Energy.

Buffalo Ridge Power Partners, LLC is an independent power producer that proposes to construct the Project to develop environmentally responsible power generation in the United States. The Project is intended to provide electricity that Minnesota and regional utilities will need to meet their forecasted energy needs, including Minnesota's Renewable Energy Standard milestones, but also other states' renewable energy objectives.

The Applicant intends to begin construction of the Project in 2011, with commercial operation expected within eighteen months after construction commences.

The Bitter Root Project will consist of either ninety-two individual wind turbines that are each capable of generating 1.5 MW of electricity or a smaller number of larger turbines, up to 3.0 MW in size, to reach a nameplate capacity of approximately 138 MW. A final decision on turbine model will be made prior to commencement of construction. Depending on the net capacity factor of the Bitter Root Project, expected to be between 35 and 40 percent, the Bitter Root Project will generate between 423,108 and 483,552 megawatt-hours annually.

The Applicant proposes to construct the Project on approximately 35 square miles located primarily in Yellow Medicine County, with a small portion in adjacent Lincoln County (the "Project Area"), in southwestern Minnesota near the City of Canby and near the South Dakota/Minnesota border (**Exhibit 1**). Project location is shown in **Exhibit 2**. **Table 1.1** lists the Township, Range, and Sections included with the Project Area.

Table 1-1: Project Location

County	Township Name	Township	Range	Section
Lincoln	Hansonville	113	46	2, 3, 4

[1] "Yellow Medicine" is an alternate Native American name for the "bitter root" of the Yellow Parilla (or Moonseed) plant, which is native to the region. Source: http://yellowmedicine.govoffice.com/

Table 1-1: Project Location				
County	**Township Name**	**Township**	**Range**	**Section**
Yellow Medicine	Fortier	114	46	3-10, 13-17, 19-30, 32-36
	Florida	115	46	29-32

The Project Area encompasses approximately 35 square miles (22,434 acres). The Applicant has site control on approximately 12,600 acres of land within the Project Area, which is more than sufficient to support the Project.

In addition to the turbines, associated facilities will include gravel access roads, an operation and maintenance (O&M) building, one or more permanent meteorological towers, an electrical collection system, and a substation with an adjacent interconnection switchyard.

Consistent with the Minnesota Public Utilities Commission (MPUC) objectives, the Applicant is committed to optimizing the wind resource for the Bitter Root Project. All decisions with respect to equipment selection, site layout, and spacing are designed to make the most efficient use of land and wind resources. The Applicant will evaluate the site to optimize wind resources, transmission interconnection opportunities, and economic factors, while avoiding and minimizing impacts to environmental resources. The turbine selected for the Bitter Root Project will be dependent on the most appropriate technology available at the time of ordering equipment prior to construction.

2.0 APPLICANT INFORMATION

2.1 The Applicant and Its Role in the Project

2.1.1 Buffalo Ridge Power Partners, LLC

The Applicant, Buffalo Ridge Power Partners, LLC, is a Delaware limited liability company formed for the purpose of developing the Bitter Root Wind Farm Project ("Bitter Root Project"). Buffalo Ridge Power Partners is a joint venture of ACCIONA Wind Energy USA, LLC ("ACCIONA Wind Energy"), and Global Winds Harvest, LLC ("Global Winds"). Once constructed and commercially operable, however, the Applicant expects that the Project will be owned and operated exclusively by ACCIONA Wind Energy.

2.1.2 ACCIONA Wind Energy USA LLC

ACCIONA Wind Energy USA LLC ("ACCIONA Wind Energy") is a wholly-owned affiliate of ACCIONA Energy North America Corporation ("ACCIONA North America"), a wholly-owned subsidiary of ACCIONA S.A. ("ACCIONA") an international energy company

based in Madrid, Spain. ACCIONA North America is responsible for ACCIONA's operations in the United States and Canada, with approximately 150 employees located primarily in Chicago, Illinois, and with regional offices in Troy, New York, Solana Beach, California, and Toronto (Ontario), Canada.

ACCIONA Wind Energy has a strong existing presence in North America. ACCIONA Wind Energy owns and operates the 180 MW (120 turbine) Tatanka Wind Farm, a $381 million wind farm located on the border of central North Dakota and South Dakota. The Tatanka Wind Farm became operational on July 24, 2008. ACCIONA Wind Energy also owns the 11.88 MW Velva Wind Farm, located in North Dakota. ACCIONA Wind Energy owns and operates the 123 MW Red Hills Wind Farm located in Roger Mills and Custer counties, Oklahoma that became operational in March, 2009, and has a 25% interest in the 74 MW Blue Canyon Wind Farm, also located in Oklahoma. Its 100.5 MW EcoGrove Wind Farm, in Stephenson County, Illinois became operational in July of 2009. In Canada, ACCIONA Energy North America owns interests in approximately 130 MW of currently operating wind projects. ACCIONA is committed to growing other wind energy assets throughout North America.[2]

2.1.3 ACCIONA

Now operating for more than 100 years, ACCIONA is a diversified, global energy and infrastructure leader operating on five continents, 31 countries, with more than 35,000 employees. With 6,037 MW of installed wind energy, it is the world's second largest owner of wind assets and one of the world's leading wind developers. ACCIONA is a vertically integrated wind business, from the design and manufacture of wind turbines to the development, construction, and operation of wind farms.

In 2009, ACCIONA North America is working to complete construction on 220 MW of wind energy in the United States and has several thousand additional MW of renewable energy under development in North America. ACCIONA North America is also a leading wind turbine manufacturer. In 2007, ACCIONA Windpower North America, LLC ("ACCIONA Windpower") opened a wind turbine manufacturing plant near Iowa City, Iowa, which has an annual output capacity of 450 wind turbine generators and employs approximately 123 people when running at peak capacity. In addition to wind, ACCIONA has a significant presence in other renewable energy technologies. The company has installed a 65 MW concentrated solar power plant in southern Nevada, 115 MW of solar photovoltaic power, and 15 MW of geothermal power. ACCIONA owns and operates several biomass plants, 19 small hydropower stations, and several biofuel production facilities that produce biodiesel from vegetable oils and bioethanol from wine-surplus alcohol. ACCIONA also has expertise in other major infrastructure development, including desalination technology and water treatment services.

ACCIONA has received a number of recent honors, including "Gold Class Sector Leader" in the Dow Jones Sustainability World Index and Dow Jones STOXX Sustainability Index (a list of the 100 most sustainable corporations in the world), Best

[2] http://www.acciona-na.com/About-Us/Our-Projects.aspx

Global Renewable Developer (Ernst & Young 2007), and Cleantech Corporation of the Year (Cleantech Venture Network 2007).

2.1.4 Global Winds Harvest

Global Winds Harvest, LLC ("Global Winds"), is a private wind energy development company that is a wholly owned subsidiary of Global Winds Harvest, Inc, with principal offices in Schenectady, New York. Global Winds was formed in 1999 by engineers and principals of Nordex, one of the world's leading wind turbine manufacturers, and the company is currently developing a pipeline of over 1000 MW across the United States. In 2007, Global Winds partnered with ACCIONA Wind Energy to develop the 180 MW Tatanka Wind Farm.

2.2 Interests in Other LWECS

Neither the Applicant nor any of the other related entities has an interest in any other wind projects in Minnesota.

3.0 CERTIFICATE OF NEED

Under Minnesota Statutes §§216B.2421 and 216B.243 and Minnesota Rules Chapter 7849, a Certificate of Need (CON) is required for the Bitter Root Project because it is larger than 50 MW. The Applicant applied for a CON for the Bitter Root Project on April 27th, 2009 (see PUC Docket No. IP-6684/CN-08-785). The Commission is currently processing the CON.

The Applicant anticipates that the Commission can make a final decision on both the CON and the Site Permit by the spring of 2010.

4.0 STATE POLICY

The Bitter Root Project is being developed in full compliance with the siting requirements of Minnesota Rules Chapter 7836 and the provisions of Minnesota Statutes §§ 216E.03, subd. 7, and 216F.02(a), which direct the Commission to site new large energy facilities in accordance with state goals to conserve resources, minimize environmental impacts, minimize human settlement conflicts and land use conflicts, and ensure an efficient, cost-effective energy supply. All decisions with respect to equipment selection, site layout, and spacing are designed to make the most efficient use of land and wind resources. The Applicant has and will continue to evaluate the site to optimize wind resources, transmission interconnection opportunities, and economic factors, while avoiding and minimizing impacts to environmental resources.

Further, the Bitter Root Project will be constructed and operated in a manner that is consistent with state policy expressed in Minnesota Statutes § 216F.03 that Large Wind Energy Conversion Systems (LWECS) be sited in an orderly manner compatible with environmental preservation, sustainable development, and the efficient use of resources. As more fully explained herein, the Bitter Root Project will promote all three

of these legislative goals. The Bitter Root Project is consistent with environmental protection; it will have little impact on the environment, including agricultural land in the area. It is sustainable, relying on the wind to generate electricity. Furthermore, it will be efficient, employing state-of-the-art turbines, allowing adequate spacing, and accommodating nearby wind projects and future developments.

In addition to all this, the Bitter Root Project will also promote state policies regarding promotion of renewable energy. Minnesota has established a preference for renewable energy. Minnesota Statutes §§ 216C.051, subd. 7, 216B.2422, subd. 4, and 216B.243, subd. 3. In 2007 the Minnesota Legislature passed the 2007 Renewable Energy Act (Minnesota Laws 2007, ch. 3), which establishes certain renewable energy milestones that Minnesota utilities must meet, so that by the year 2025, electric utilities serving retail customers in the state must obtain 25% of their retail electric sales from eligible renewable resources, including wind. For Minnesota's largest utility – Xcel Energy – the goal is 30% renewable resources by the year 2020. Minnesota Statutes § 216B.1691, subd. 2a.

The Bitter Root Project is intended to help utilities meet these upcoming Minnesota Renewable Standards. Upon completion, this project will provide approximately 138 megawatts of nameplate capacity renewable power generation that can contribute toward the Minnesota renewable energy commitment, on the order of 500 GWh of energy every year.

5.0 PROPOSED SITE AND WIND CHARACTERISTICS

5.1 Site Boundary

The Project Area is primarily located in southwestern Yellow Medicine County, Minnesota, and extends south into Lincoln County, Minnesota, and borders South Dakota to the west. The Project Area lies west and southwest of the City of Canby, Minnesota (**Exhibit 1)**. **Table 1.1** lists the Township, Range, and Sections included within the Project Area.

The Bitter Root Project is located in an area that is entirely rural with an agricultural-based economy. Corn and soybeans are the predominant crops cultivated in Yellow Medicine and Lincoln counties. These counties are also producers of livestock, especially hogs and pigs. The landscape in the Project Area ranges from gently undulating to steeply rolling and hilly. The proposed Project Area is approximately 22,434 acres (approximately 35 square miles), and elevations range from 408 to 531 feet above sea level (**Exhibit 2**).

5.2 Avoidance/Exclusion Areas

The Public Utilities Commission provides in its rules, Minnesota Rules part 7849.5940, that large electric generating facilities, those over 50 MW, cannot be located in certain areas, such as state parks and wildlife refuges, and other areas can only be utilized under special circumstances. The Bitter Root Project will not encroach on any of these

prohibited areas nor unduly impact other protected features, as summarized in the **Table 5.1** below.

Table 5.1 Avoidance/Exclusion Areas in Project Area	
Avoidance/Exclusion Areas	**Present in Project Area?**
National Parks	None
National Historic Sites	None
National Historic Districts	None
National Wildlife Refuges	None
National Monuments	None
National Wild, Scenic and Recreational Riverways	None
National Wilderness Areas	None
State Wild, Scenic and Recreational Rivers	None
State Parks	None
Nature Conservancy Preserves	None
State Scientific and Natural Areas	Yes (**Exhibit 8**)
State Wilderness Areas	None
Registered Historic Sites/Dist.	None
State Wildlife Mgmt. Areas	Yes (**Exhibit 8**)
County and Municipal Parks	None
State and Federal Rec. Trails	None
Designated Trout Streams	Yes (**Exhibit 14**)
DNR Canoe/Boating Routes	None
Prime Farmlands	Yes (**Exhibit 11**)
Wetlands	Present (**Exhibits 15a and 15b**)
Streams Within Site Boundaries	Present (**Exhibit 14**)
Residences	Present (**Exhibit 3**)

5.3 General Wind Characteristics

The Project Area lies within a geographic region that has historically proven viable for the deployment of wind turbine generators. The Applicant is in the process of assessing the long term wind climate of the Bitter Root Project site and simulating the performance of various commercial wind turbine generators. The Applicant analyzed multiple data sets from publicly available sources and from equipment installed within and near the Project Area by the Applicant to better understand Project Area wind characteristics.

The United States Department of Energy (DOE) and the Minnesota Department of Commerce (DOC) have conducted wind resource assessment studies in Minnesota since 1982. In October 2002, the DOC published the latest Wind Resource Analysis Program (WRAP) report of wind analysis data from monitoring stations across Minnesota. According to the WRAP data collected at the Buffalo Ridge south of the Bitter Root Project Area, the mean annual wind speed at an elevation of 50 meters (m) (164 ft) above ground level is mapped as 6.81 to 7.17 meters per second (m/s) (15.2 to 16.0 mph). At an elevation of 70 m (230 ft) above ground level, mean annual wind speed is mapped as 7.17 to 7.51 m/s (16.0 to 16.8 mph). This generally conforms to specific wind characteristics observed in the Project Area, as discussed below.

5.4 Specific Wind Characteristics in Project Area

The Applicant has collected data from three temporary meteorological monitoring stations (Gary 2, 3, and 4) within the Project Area, as shown on **Exhibit 3**[3]. The earliest data collected within the Project Area is from November 2004. To supplement and correlate the data from the Project Area, the Applicant used the Marshall National Weather Service (NWS) Automated Surface Observing System (ASOS) meteorological station, which has been collecting data since November 1972. This station is located approximately 31 miles southeast of the Project. **Table 5-2** below describes the meteorological stations.

Table 5-2: Wind Climate Meteorological Stations

Station	Location	Easting	Northing	Elevation[a]	Sensor Elevation[b]	Operation Dates
Marshal ASOS	NAD 83 UTM z14	752951	4926590	360	10	Nov. 1972/ present
Gary 2	NAD 83 UTM z14	707786	4946356	515	79, 75, 60, 40	Jan. 2008/ present

[3] Data collection at the "Gary 1" monitoring station was discontinued in May of 2006.

Table 5-2: Wind Climate Meteorological Stations						
Station	**Location**	**Easting**	**Northing**	**Elevation[a]**	**Sensor Elevation[b]**	**Operation Dates**
Gary 3	NAD 83 UTM z14	704889	4952835	497	79, 75, 60, 40	Aug. 2008/ present
Gary 4	NAD 83 UTM z14	703645	4948863	513	61, 54, 40	Aug. 2008/ present

[a] Meters above Mean Sea Level.
[b] Meters above ground surface.

WindPRO, WAsP, and proprietary software models are used to analyze the available wind data from the Project Area meteorological stations and make corrections for the site effects (topography, surface roughness, and obstacles) to produce a site-independent characterization of the local wind climate. The resulting local wind climate was applied in conjunction with the Project Area site effects to predict the spatial wind variations at the Project Area.

5.4.1 Interannual Variation

Calculated (extrapolated) long term values at the meteorological stations were 8.6 to 8.0 m/s, indicating total variability of roughly 7% to a mean of 8.4 m/s. Deviation from the long term mean is further discussed in Section 5.4.2 below.

5.4.2 Seasonal Variation

Appendix A presents a summary of long-term variability of wind speed. Based on calculated long term monthly average wind speeds at the measurement point, it is expected that the monthly wind speeds will vary between 7.2 and 9.1 m/s around the mean of 8.4 m/s in a normal year. This indicates variability of as much as 14% from the long term average for any given month. By meteorological season, average wind speeds will vary by as much as 12% from the long term average in a normal year. In general, the average wind speeds are highest during the winter and lowest during the summer; average wind speed generally increases through the fall and decreases through the spring. The strongest winds occur during the months of April, 9.0 m/s and May, 9.1 m/s. The summer months of July and August have the lowest average wind speeds of 7.4 and 7.0 m/s, respectively.

5.4.3 Diurnal Conditions

Wind speeds vary diurnally, as shown in **Appendix B**. Wind climates for this region of the continent are generally stronger during nighttime hours and early morning hour declining during midday during most seasons (and years). The highest average wind

speed is generally greatest during the afternoon and late night. The lowest wind speeds are in mid-morning and early evening.

5.4.4 Atmospheric Stability

Atmospheric stability at the 79 m elevation of the meteorological station is calculated to be 6.4 degrees for the period of record. The atmospheric stability is the lateral fluctuation of the wind, represented as Sigma Theta. Stability level is characterized by Sigma Theta 0 to 2.5 degrees as stable, 2.5 to 7 as moderately stable, 7 to 9 as neutral, 9 to 15 as moderately unstable, and greater than 15 degrees as very unstable (see *Meteorology and Atomic Energy*, Slade D.H., 1968). Using the Sigma Theta categorization, the measurement site would be defined as moderately stable. The stability level frequency is shown in **Table 5-3**.

Table 5-3: Frequency of Stability Class

Stability Level	Frequency
Stable (0-2.5 degrees)	10%
Moderately Stable (2.5-7degrees)	59%
Neutral (7-9 degrees)	16%
Moderately Unstable (9-15 degrees)	11%

5.4.5 Hub Height Turbulence

The Turbulence Intensity (TI) is defined as the measured standard deviation of wind speed over an hour, divided by the mean for the same time period. Average TI at the 79 meter elevation at the Gary 2 Station at the Project Area (for all sectors and all wind speeds) is calculated to be 9.2% for the measurement period. The TI is also calculated as 8.3% across the normal operating range for most suitable, commercial wind turbine generators (4-25 m/s).

5.4.6 Extreme Wind Conditions

While extreme wind conditions are rare in southeastern Minnesota, they are possible. The maximum recorded gust at the 79 meter elevation at the Gary 2 Station at the Project Area for the period was recorded at 45.65 m/s. Using a conservative gust factor of safety of 1.3, the maximum probable gust would still not be in excess of the design parameters of most suitable, commercial wind turbine generators. Extreme temperature range is expected to be between 28 and -20° C. Glaze icing may occur up to 2 percent of the operating hours of the year for wind turbines in this area.

5.4.7 Wind Speed Frequency Distribution

Nearly 83% of all hourly average wind speed frequencies are calculated to fall between 4-25 m/s. A histogram of the expected wind speed frequency distribution is displayed in **Exhibit 4**.

5.4.8 Wind Variation with Height

The relative change in wind speed as a function of height, or wind shear, was calculated using a power function with the relative distance from the ground. The general equation used for calculating wind shear is $S/S0 = (H/H0)^{\alpha}$, where S0 and H0 are the speed and height of the lower level and α is the power coefficient. The power coefficient can vary greatly due to the terrain roughness and atmospheric stability. The power coefficient will also change slightly with variation in height. Wind shear coefficients (alpha values) are a commonly accepted descriptor of wind variation across vertical distance in the wind energy industry. The wind shear alpha value calculated for the period of measurement at the Gary 2 Station at the Project Area between the 79 meter elevation instrument and the 40 meter elevation instrument is 0.16, which is assumed normal for the topography and land cover typical of southwestern Minnesota.

5.4.9 Spatial Wind Variation

Spatial wind variation over the Project Area will be modeled using commercially available software as well as the Applicant's internal, proprietary tools. Further, additional meteorological stations were installed within the Project Area to further validate spatial model calculations and reduce uncertainty. Preliminary calculations and modeling indicate that free stream average wind speeds will not vary significantly more than 10% across the Project Area and that the installed meteorological stations are representative of greater than 90% of the anticipated wind turbine generator locations.

5.4.10 Wind Rose

A wind rose is a graphical presentation that shows the various compass points, and specifies the frequency that the wind is observed to blow from a given compass point. Small-scale variations are expected at the proposed site depending on individual turbine height and exposure. The prevailing energy/wind direction is SSE-S, with significant wind energy from the WNW-N sectors. A wind rose for the Gary 2 Station is presented in **Exhibit 5**.

5.5 Other Meteorological Conditions

Minnesota has a continental-type climate characterized by frequent occurrences of continental polar air throughout the year, with occasional Arctic outbreaks during winter and occasional periods of prolonged heat during the summer, especially in southern Minnesota when warm air moves in from the Gulf of Mexico and southwestern United States. Pacific Ocean air masses moving across the western United States allow for mild and dry weather conditions during all seasons. While the climate within the Project

Area is fairly uniform due to relatively little topographic relief and lack of large water bodies, extreme weather events, such as tornados, high thunderstorm winds, high winds and blizzard conditions do occur and are discussed further in this section.

Specific climatological data has not been recorded at sites within the Project Area. However, data from a climate station located in Canby approximately three miles northeast of the Project Area is representative. A summary of temperature, precipitation and wind speeds from the Canby climate station is provided in **Table 5-4**.

Table 5-4: Temperature and Precipitation

Month[a]	Temperature (^oF)					Precipitation (Inches)		Ave. Wind Speed (mph) for Month
	Avg. Daily Max	Extreme Max	Avg. Daily Min	Avg. Extreme Min	Avg	Rainfall Average	Snowfall Average	
Jan	24.1	46.1	3.3	-0.3	13.7	0.88	8.5	8
Feb	30.3	33.5	10.6	-4.6	20.5	0.75	6.3	8
Mar	41.0	41.5	21.7	17.9	31.4	1.78	9.1	9
Apr	57.0	54.7	33.9	36.4	45.5	2.27	3.1	10
May	71.1	68.2	46.8	52.6	59.0	2.92	0.0	9
Jun	80.5	76.4	56.4	62.2	68.5	4.09	0.0	8
Jul	85.2	83.1	61.2	64.7	73.2	3.35	0.0	7
Aug	83.1	79.0	58.9	65.7	71.0	2.78	0.0	7
Sept	74.1	68.2	48.8	52.3	61.5	2.38	0.0	7
Oct	61.6	60.0	36.4	43.4	49.0	2.12	0.6	9
Nov	42.0	44.9	22.5	20.5	32.3	1.66	8.1	9
Dec	28.7	31.5	9.1	1.6	18.9	0.70	6.5	8
Ave	56.6	57.3	34.1	34.4	45.4	25.68	42.2	8

[a] Sources: National Climatic Data Center website, accessed September 2008, and Midwest Regional Climate Center, accessed September 2008, Historical Climate Data, and normals, means, and extremes from Canby, MN climate station No. 211263 (1971-2000), State Climatology Office.

Extreme weather events in the Project Area have been recorded by the National Climatic Data Center (NCDC) for the period of time from January 1950 through May 2008. Extreme weather events include tornadoes/funnel clouds, hail, thunderstorm wind, high wind, blizzards, extreme cold/low wind chill, glaze, heavy ice and snow, blowing snow, excessive heat, fog, floods, and flash floods.

For the City of Canby, the NCDC records indicate the occurrence of two tornadoes (1994 and 2000), six hail events (1994, twice in 1999, 2004, 2006 and 2007), and ten thunderstorm wind events (1994, 1995, 1997, twice in 1998, 1999, 2004, twice in 2005 and 2006). None of these events resulted in injuries, death or property damage. The NCDC also recorded additional thunderstorm wind, high wind, tornadoes, hail, flooding and excessive heat events in Yellow Medicine and Lincoln counties in the vicinity of the Project Area during this period. Typically, such storms are local in extent, of short duration and result in damage to relatively small geographic areas.

In 2005 the Minnesota Department of Commerce (DOC), with the assistance of WindLogics, Inc., prepared a wind resource map called the Regional Wind Analysis State Wind Speed Map for the state of Minnesota (Wind Map). Data used to develop the Wind Map was statistically adjusted to accurately represent long-term (40 year) wind speeds over Minnesota. Based on this information, wind speed across Lincoln County at 80 meters ranges from 8.1 to 8.9 m/s and at 100 meters ranges from 8.1 to 9.3 m/s. In Yellow Medicine County, wind speed at 80 meters ranges from 7.3 m/s at the northeastern corner of the county to 8.9 m/s at the southwestern corner of the county. At 100 meters, wind speed across most of Yellow Medicine County ranges from 8.1 to 8.5 m/s, with higher wind speeds at the southwestern corner of the county, ranging from 8.5 to 9.3 m/s.

5.6 Other Wind Turbines in the Area

The Buffalo Ridge area in southwestern Minnesota has some of the best winds in the country for development of wind energy, and there are over 60 wind energy projects in four southwestern Minnesota counties, with over 840 MW of nameplate capacity (**Exhibit 6**). Several of these projects are in Lincoln County, including Lake Benton I (106.5 MW), Lakota Ridge (11.25 MW), and MinnDakota (100 MW). Other projects, such as Lake Benton II (103.5 MW), are in neighboring Pipestone County, and others are in nearby Murray and Nobles counties (Fenton Wind Power Project (205.5 MW)). The American Wind Energy Association maintains a list of Minnesota wind projects on its webpage.[4]

6.0 WIND RIGHTS

The Applicant has obtained wind right options and easements that are believed to be more than sufficient to support the Project. Within the 22,434 acre (approximately 35 square miles) Project Area, the Applicant has land rights on approximately 12,600 acres as of May 2009. Land right options will encompass the proposed wind farm and all

[4] http://www.awea.org/projects/Projects.aspx?s=Minnesota

associated facilities, including but not limited to wind and buffer easements, wind turbines, access, collection system, O&M Facility, project substation and interconnection facility, and possibly land to mitigate environmental impacts incurred due to development.

The right to install wind turbines or develop lands within the overall boundary of the Bitter Root Project that are not covered by one of the lease agreements remain fully with those landowners and other lessees.

7.0 PROJECT DESIGN

7.1 Project Layout

Exhibit 2 shows the Bitter Root site permit boundary (i.e., the Project Area). The Project Area encompasses approximately 35 square miles (22,434 acres), of which approximately 12,600 acres are under site control. Having a larger Project Area than is actually required for the Project will allow some siting flexibility and provide sufficient room for buffers that may be required for avoidance of identified infrastructure and natural resources.

The Project will consist of an array of wind turbines, transformers, collection system, access roads, a permanent meteorological tower, an operations and maintenance (O&M) building, and interconnection facilities. The Applicant is proposing to use turbines ranging from 1.5 MW to 3.0 MW. If the Applicant selects the 1.5 MW turbine, up to 92 turbines would be used, while the selection of a 3.0 MW turbine would result in the use of up to 46 turbines. **Exhibit 3** presents a preliminary site layout based on 1.5 MW turbines.

The final site plan, which the Applicant will provide prior to construction, will show the actual project layout based on the final selection of turbine type and size. The final layout will optimize wind resources while minimizing the impact on land resources and potentially sensitive resources. The topography of the site and the selected turbine technology will dictate turbine spacing and layout of support facilities.

7.2 Turbine Description

7.2.1 Turbine Model

The Applicant intends to use either the ACCIONA Windpower AW-1500 1.5 MW wind turbine or the ACCIONA Windpower AW-3000 3.0 MW wind turbine[5], but is considering other turbine sizes. The Application uses the ACCIONA Windpower AW-1500 1.5 MW machine as a representative turbine for the 1.5 MW Class and the ACCIONA Windpower AW-3000 3.0 MW machine as a representative turbine for the 3.0 MW Class. Regardless of the turbine selected, the hub height will range between 80 to 120 m (about 262 to 394 ft) and the RD will range between 77 to 109 m (about 253 to 358

[5] The AW 3000 is currently under development by ACCIONA Windpower and is expected to be available in 2010.

ft). **Table 7-1** shows the characteristics for the ACCIONA 1.5 MW and 3.0 MW turbines and **Appendix C** includes additional information regarding these turbines.

The ACCIONA Windpower AW-1500 1.5 MW wind turbine has a multi-year track record with excellent availability, performance, and mechanical reliability. The components from which the 1.5 MW wind turbine is constructed are specified by ACCIONA Windpower under strict supply conditions and quality control processes. The strong vertical integration of ACCIONA and ACCIONA Windpower provides for a seamless relationship between the wind farm owner/operator and the wind turbine supplier. Access to technical support, troubleshooting, training, and supply chain (spare parts) is optimized by a contractual relationship and an alignment of the best interests of both parties.

The design of the ACCIONA Windpower 1.5 MW wind turbine generator was developed based on the experience gained by ACCIONA in the course of operating turbines manufactured by others; the lessons learned from over ten years of operations were incorporated into the ACCIONA Windpower 1.5 MW wind turbine generator design. The ACCIONA proprietary design incorporates features such as the dual-bearing main shaft, to reduce axial loads on the gearbox, internal access to the inside of the hub, and a wider nacelle enclosure to make servicing the ACCIONA Windpower 1.5 MW wind turbine generator easier and safer than servicing other manufacturers' turbines. The turbines also have noise insulation and utilize non-flammable materials.

The 3.0 MW model is under development, but ACCIONA Windpower will apply its same expertise and commitment to quality that has marked the development and performance of the 1.5 MW model in bringing the larger model to fruition.

Table 7-1 below shows the characteristics for the ACCIONA Windpower 1.5 MW and 3.0 MW turbines.

Table 7-1: Wind Turbine Characteristics

Design Feature	**1.5 MW ACCIONA Windpower Wind Turbine**	**3.0 MW ACCIONA Windpower Wind Turbine**
Nameplate Capacity	138 MW (92 units X 1.5 MW = 138 MW)	138 MW (46 units X 3.0 MW = 138 MW)
Design Life	Minimum of 20 years	Minimum of 20 years
Hub Height	80 m (262 feet)	100 - 120 m (328 - 394 feet)
Rotor Diameter	77 m (253 feet)	109 m (358 feet)
Total Height	118.5 m (389 feet)	175 m (568 feet)

Table 7-1: Wind Turbine Characteristics		
Design Feature	**1.5 MW ACCIONA Windpower Wind Turbine**	**3.0 MW ACCIONA Windpower Wind Turbine**
Distance to 50 dBA Sound Level (at 80 m hub height)	190 m (623 feet)	237 m (779 feet)
Cut-in Wind Speed	3.5 m/s (7.8 mph)	3.5 m/s (7.8 mph)
Rated Capacity Wind Speed	11.1 m/s (24.8 mph)	11.1 m/s (24.8 mph)
Cut-out Wind Speed	25 m/s (55.9 mph)	25 m/s (55.9 mph)
Rotor Speed	73.9 m/s (165.3 mph)	74.7 m/s (167.9 mph)
Revolutions per minute (RPM)	18.3	13.2
Tip Speed	73.9 m/s (165.3 mph)	74.7 m/s (167.9 mph)

The following simple schematic (**Figure 7-1**) shows the overall dimensions of the 1.5 MW turbine.

7.2.2 Turbine Spacing

Wind-powered electric generation is entirely dependent on the availability of the wind resource at a specific location. The energy available from the wind is proportional to the cube of the wind velocity. Therefore, a doubling of the wind velocity will increase the available energy by a factor of eight times. Analysis of wind direction data suggests that the optimal turbine string alignments are from west to east and from west-northwest to east-southeast. Design of the turbine array and collection system will minimize energy loss due to wind turbine wakes, turbulence, and electrical line losses.

The minimum turbine spacing internally within the Project area will range from 3 times the RD east-west spacing to 5 times the RD north-south spacing with up to 20 percent of the turbines having closer spacing (**Exhibit 3**). The setback from the site perimeter and unleased lands would be 5 times the RD on the north-south axis and 3 times the RD on the east-west axis. Bitter Root Project turbines will be set back at least 5 times the RD from existing wind turbines owned by other parties not associated with this Project. With a rotor diameter of 253 to 358 feet, depending on turbine size, the perimeter setback will vary from 759 feet at a minimum (3 times the RD for 1.5 MW model) to over 1,790 feet (5 times the RD for 3.0 MW model).

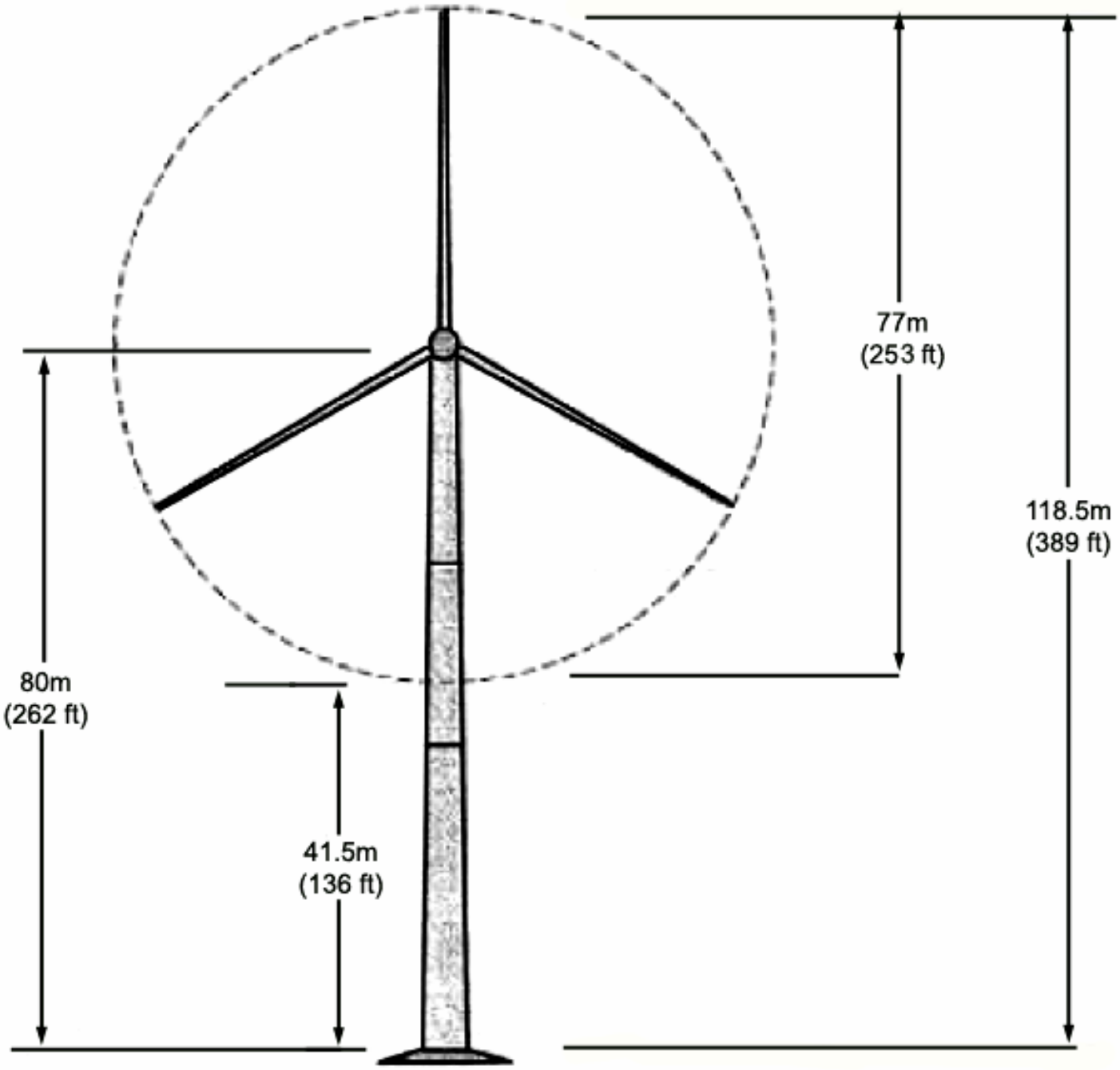

Figure 7-1: Schematic of ACCIONA Windpower 1.5 MW Turbine

Previous LWECS Site Permit requirements have established minimum setbacks from occupied residences of 500 feet and setbacks from public or developed roads of 250 feet. The Bitter Root Project will exceed by a significant margin minimum setbacks that

have been required in these other wind project permits from inhabited (not vacant or abandoned) residences and public roads (**Exhibit 3**). The Applicant will maintain an appropriate setback from inhabited residences to stay below the MPCA Nighttime Noise Limit of 50 dBA. Based on 1.5 to 3.0 MW turbines, the setback from residences is expected to exceed the 500 foot limit (see Section 8.2 for further discussion of the sound analysis).

7.2.3 Towers

The towers for the 1.5 MW turbine are expected to be tubular steel with a hub height of 80 m (263 ft), and those of the 3 MW turbine are expected to be concrete and up to 120 m (394 ft). The steel turbine towers, where the nacelle is mounted, consist of three to four sections manufactured from certified steel plates. The concrete towers consist of 5 to 6 section of 20 m (66 feet) tall precast concrete sections that are assembled on-site. Welds on the steel towers are made by automatically controlled power welding machines and are ultrasonically inspected during manufacturing per American National Standards Institute (ANSI) specifications. All surfaces are sandblasted and multi-layer coated for protection against corrosion. Access to the turbine is through a lockable steel door at the base of the tower. Platforms are connected with a ladder or lift and a fall arresting safety system for access to the nacelle.

7.2.4 Foundations

The 1.5 MW freestanding steel tubular towers will be connected by two stud races embedded in concrete. The 3.0 MW freestanding concrete tubular towers will be connected by anchor bars embedded in the foundation and high quality grout. Geotechnical surveys, turbine tower load specifications and cost considerations will dictate final design parameters of the foundations. The base portion of the foundation for a 1.5 MW turbine is generally an octagon approximately 40 to 60 feet in diameter and approximately 8 feet thick. The base portion of the foundation for a 3.0 MW turbine is generally an octagon approximately 80 feet in diameter and 25 feet thick. The pedestal of the foundation (the top portion on which the turbine tower base rests) is approximately 14 to 16 feet in diameter and 5 feet thick. Occasionally other foundation types are used based on the soil conditions found during pre-construction geotechnical investigations.

7.3 LWECS Electrical System

The turbines will each generate electricity at a voltage of 12 kV. The electricity generated by each turbine is stepped-up by a pad-mounted transformer at the base of the turbine to the collection system voltage of 34.5 kV. The electricity generated at each turbine is collected by a system of underground or overhead power collection lines within the Project Area and brought to the Project Substation.

The collection system is typically adjacent to the Project access roads, between turbine strings, and along public right-of-ways or easements. In cases where such infrastructure must be sited on property that is not governed by the existing wind

easement and land lease options, the Applicant will obtain easements from landowners for the necessary property.

The power collection lines from the turbines will be plowed or trenched underground adjacent to the access roads, or they will cut across property to another turbine string on private property or public right-of-way. At public roads at the edge of farm fields, the power collection lines will either rise from underground to overhead lines or continue as underground lines with occasional aboveground junction boxes. The collector lines will deliver 34.5 kV wind-generated energy to the Project Substation.

7.3.1 MISO Coordination

The Midwest Independent (Transmission) System Operator (the MISO) is responsible for operating much of the transmission system in this region of the country. The Applicant will follow the MISO process for interconnection, including necessary studies and agreements. The Applicant requested interconnection in April 2006 and holds Queue Number 38818-02, Project Number G618. The interconnection details will be determined as a result of studies and discussions and agreements with the MISO and the transmission owner. Prior to interconnecting the Project to the MISO's system, the Project will file a Large Generator Interconnection Agreement (LGIA) with the Federal Energy Regulatory Commission (FERC). This process is established by the MISO's Open Access Transmission Tariff (OATT) and approved by the FERC. The interconnection process for the Project has been severely hampered by issues involving network upgrades for the CAPX 2020 utilities Brookings County – Hampton 345 kV Line and MISO's cost allocation procedures. The total cost of the Brookings to Hampton Line is estimated at between $700 million and $755 million[6]. The Applicant is currently protesting the proposed cost allocation at the FERC, but there is no definite timeline for resolution of either the Brookings to Hampton Line docket (MPUC Docket No. ET2/TL 08-1474) or the MISO cost allocation docket (FERC Docket No. ER09-1431-000).

7.4 Associated Facilities

7.4.1 Substation

The Applicant will construct a Project Substation which is anticipated to be adjacent to the existing 115kV Canby to Toronto Transmission line owned by Otter Tail Power. At the Project Substation, the collected power from the Project will be transformed from 34.5 kV to 115 kV via one or more new transformers installed as part of the Project for delivery into the existing transmission system. The location of the Project Substation has not yet been determined but will likely be sited in Fortier Township in Yellow Medicine County near the center of the Project Area.

[6] See Minnesota Public Utilities Commission, Docket Nos. ET2/TL08-1474 (Route Permit Application for the Brookings County - Hampton Transmission Line Project) §2.6.1

ACCIONA Wind Energy will own and operate the Project Substation and related facilities up to the Point of Interconnection[7]. The transmission provider (Otter Tail Power for this Project) typically owns and operates the facilities after the Point of Interconnection, including any new network upgrades which may be necessary for the Project. The ownership and allocation of responsibility for costs, construction, and operations of interconnection facilities will be detailed in the LGIA.

7.4.2 Access Road System

Access roads will be built to allow vehicles to access each wind turbine. Initially, during construction access roads will be approximately 40 feet wide to allow for the large cranes need for erection to access each turbine. Following construction, the road with will be reduced to approximately 16 feet wide and will have gravel as cover to allow all weather use. Although the total length of roadway constructed for the Project will not be known until turbine locations are finalized, the Applicant anticipates approximately 20-25 miles of access roads will be constructed for the Project. In addition to the access roads, there will be a gravel work area at the base of each turbine measuring approximately 50 by 50 feet.

The access roads will be sited in consultation with local landowners and completed in a manner to allow for long-term use. They will be located to facilitate both construction (cranes) and continued operation and maintenance. Siting roads in areas with unstable soil will be avoided wherever possible. All roads will include appropriate drainage and culverts while still allowing for the crossing of farm equipment.

The roads will consist of graded dirt, overlaid with geotextile fabric (if needed) and covered with gravel. To facilitate crane movement and equipment delivery, temporary gravel roadway will be temporarily installed on either side of the permanent roadway.

In addition, during construction turbine assembly will require a gravel crane pad area extending from the access road to the turbine foundation as well as an area for component lay down and rotor assembly centered close to the turbine foundation.

7.4.3 Operation and Maintenance Building

An operations and maintenance facility will be constructed as part of this Project. The Applicant typically constructs the O&M facility adjacent to the Project Substation. Generally five acres is required for the O&M building and associated parking and storage facilities. The building itself will be large enough to house equipment to operate and maintain the wind farm as well as administrative offices, meeting space, and employee support space. The O&M facility also contains the Project Supervisory Control And Data Acquisition (SCADA) system for the Project. The SCADA system communicates with each with turbine, the electrical equipment, and the meteorological stations reporting data and allowing control both from the site as well as ACCIONA's

[7] The Point of Interconnection is the point at which energy is transferred from the Project to the transmission line and is defined in the LGIA.

System Operation Centers in Chicago and Spain. The O&M facility will also house the medium voltage switchgear which is the consolidation point for the collection system.

7.4.4 Permanent Meteorological Station

Meteorological stations record weather data necessary to determine the most efficient operational strategy for the wind turbine arrays. The data collected include wind speed and direction, temperature, humidity, barometric pressure, and rainfall. Presently there are four meteorological (met) towers installed on the Project site (see **Table 5-2**). The towers were installed in November 2004 (Gary 1 Station), January 2008 (Gary 2 Station), and two in August 2008 (Gary 3 and Gary 4 Stations). These facilities were used to collect specific site wind characteristics for design of the Project. After Project construction it is likely one or more of the existing stations will be removed and additional, permanent, stations may be added. These meteorological stations are connected to the Project's SCADA system to provide real-time data reporting. From time to time, additional met towers may be installed on site to measure power performance of the wind turbines. The permanent stations will be lighted to comply with FAA guidelines.

8.0 ENVIRONMENTAL ANALYSIS

In accordance with Minnesota Rules Chapter 7836, the Applicant provides the following discussion of the potential environmental impacts of Bitter Root Project. The Applicant is committed to a thorough review, analysis, and action plan regarding environmental impacts to assure that the concerns of stakeholders, the local community, and the State of Minnesota are adequately addressed in the development of this LWECS.

The Applicant sent letters to various regulatory and governmental authorities requesting their review of the Bitter Root Project to identify early on any potential issues of concern. A list of the agencies who received this letter is included in **Appendix D**. Responses from agencies that responded with comments regarding the proposed Bitter Root Project are discussed in the following sections. A copy of agency correspondence and responses is included in **Appendix E**.

8.1 Demographics

8.1.1 Description of Resources

The Bitter Root Project is located in a sparsely populated rural/farming area in southwestern Minnesota along the South Dakota border. With the exception of a few new farmstead homes, there is no indication of any new residential construction or development within the Project Area.

A majority of the Bitter Root Project is located in Yellow Medicine County, with a small portion extending into Lincoln County. The 2000 population of Yellow Medicine County was 11,080, and the estimated 2005 population was 10,128. The 2000 population of Lincoln County was 6,429, and the estimated 2005 population was 5,877. The Bitter

Root Project is further located in parts of Fortier and Florida Townships in Yellow Medicine County, and Hansonville Township in Lincoln County. The average household size in the year 2000 in Yellow Medicine and Lincoln counties was 2.4 people. The total number of housing units in the year 2006 was 4,970 in Yellow Medicine County, whereas Lincoln County had 3,145 housing units.

According to the 2002 U.S. Economic Census, the largest industries employing residents of Yellow Medicine County are retail trade, construction services and manufacturing. In Lincoln County the primary industries are health care and social assistance, retail trade, and construction services.

The 2004 median household income for Yellow Medicine and Lincoln Counties was $39,279 and $35,554, respectively. **Table 8-1** summarizes some of the population and economic characteristics within the Project Area. The 2000 per capita income and poverty level data are the most recent data available at the township level.

Table 8-1: Population and Economic Characteristics

Location	Population	Per Capita	Population Below Poverty Line (%)
Yellow Medicine County	**11,080**	**$17,120**	**8.1**
Fortier Township	116	$20,984	15.8
Florida Township	164	$12,349	9.6
Lincoln County	**6,429**	**$16,009**	**9.7**
Hansonville Township	122	$13,725	4.5

8.1.2 Impacts

The Bitter Root Project is anticipated to bring 200 to 250 temporary jobs, related to construction, and 15 to 20 permanent jobs to the area. The Bitter Root Project is expected to have a substantial positive economic impact on the community near the Project Area. Short-term impacts to socioeconomic resources during the construction phase would be from the wages paid to the construction workers and from the temporary land use associated with construction.

Permanent impacts to socioeconomic resources would result from the removal of agricultural land from production, from the permanent jobs required during the operations phase of the Project, and from the revenue to the County and local units of government from the Wind Energy Production Tax. Approximately 37 to 49 acres of agricultural land will be permanently removed from production. Landowners will be compensated for such loss through a lease, and the areas surrounding each turbine will

likely still be farmed. Construction is not expected to cause negative impacts to industries within the Project Area. There is no indication that any minority or low-income population is concentrated within the Project Area, or that the wind turbines will be placed in an area occupied by a minority group.

To the extent feasible, the Applicant plans to use local contractors and suppliers for portions of the construction. Wages and salaries paid to contractors and workers in Yellow Medicine and Lincoln counties will contribute to the overall personal income of the region. Additional personal income will be generated for residents in the counties and state by circulation and recirculation of dollars the Applicant pays for business expenditures and for state and local taxes. Equipment, fuel, operating supplies, and other product and service expenses will benefit businesses in the counties and the state. Landowners having a turbine or other Bitter Root Project facilities on their land will receive a royalty or lease payment annually for the life of the Bitter Root Project. Such payments should strengthen the local economy.

Construction and operation of the Bitter Root Project will provide long-term beneficial impacts to the counties' tax bases and it will contribute to improving the local economy in this part of Minnesota. As described in other nearby wind farm site permit applications, the development of wind energy in this area of Minnesota has been important in diversifying, supporting and strengthening the personal income and property tax base of southwestern Minnesota.[8]

In addition to creating jobs, adding personal income, and improving infrastructure, the Bitter Root Project will pay a Wind Energy Production Tax to the local units of government of $0.0012 per kWh of electricity produced, resulting in an annual Wind Energy Production tax ranging from approximately $503,834 to $539,375. Indirect economic benefits include creation of new jobs in manufacturing, operations and technology.

8.1.3 Mitigation

Effects to regional socioeconomics as a result of the proposed Bitter Root Project will be primarily positive due to an influx in wages and expenditures at local businesses during construction and an increase in the counties' tax bases from the construction and operation of the wind turbines and associated infrastructure. In addition, the lease payments paid to landowners will offset potential financial losses associated with removing land from agricultural production. No additional mitigative measures are proposed.

[8] See Minnesota Public Utilities Commission, Docket Nos. IP6631/WS-07-388 (Site Permit Application for a Large Wind Energy Conversion System for the Elm Creek Wind Project in Jackson and Martin Counties, Minnesota (June 15, 2007); NSP-WGR-1-95 (NSP Phase II). See also *Assessing the Economic Development Impacts of Wind Power* (2003), Northwest Economic Associates, which analyzes the NSP Phase II/Lake Benton I Wind Project in Lincoln County, MN.

8.2 Noise

8.2.1 Description of Resources

In Minnesota, statistical sound levels (L Level Descriptors) are used to evaluate sound levels and identify noise impacts. The L_5 is defined as the sound level exceeded 5% of the time, or for three minutes in an hour. The L_{50} is the sound level exceeded 50% of the time, or for 30 minutes in an hour.

Land areas, such as picnic areas, churches, or commercial spaces, are assigned to an activity category based on the type of activities or use occurring in the area. Activity categories are then categorized based on their sensitivity to traffic noise. The Noise Area Classification (NAC) is listed in the Minnesota Pollution Control Agency (MPCA) noise regulations to distinguish the categories.

Table 8-2 identifies the established daytime and nighttime noise standards by NAC. The standards are expressed as a range of permissible dBA within a one hour period; L_{50} is the dBA that may be exceeded 50 percent of the time within an hour, while L_{10} is the dBA that may be exceeded 10 percent of the time within the hour.

Table 8-2: Noise Standards by Noise Area Classification

Noise Area Classification	Daytime		Nighttime	
	L_{50}	L_{10}	L_{50}	L_{10}
1	60	65	50	55
2	65	70	65	70
3	75	80	75	80

The sounds that humans hear are actually waves of varying sound pressures, which are referred to as sound pressure levels. Sound pressure levels are measured in decibels (dB). Because human hearing is not equally sensitive to all frequencies of sound, the most noticeable frequencies of sound are given more “weight” in most measurement schemes. The A-weighted scale corresponds to the sensitivity range for human hearing. Noise levels capable of being heard by humans are measured in dBA, which is the A-weighted sound level recorded in units of decibels.

A noise level change of 3 dBA is barely perceptible to human hearing. A 5 dBA change in noise level, however, is clearly noticeable. A 10 dBA change in noise level is perceived as a doubling of noise loudness, while a 20 dBA change is considered a dramatic change in loudness. **Table 8-3** shows noise levels associated with common, everyday sources.

Table 8-3: Common Noise Sources and Levels	
Sound Pressure Level (dBA)	**Noise Source[a]**
140	Jet Engine (at 25 meters)
130	Jet Aircraft (at 100 meters)
120	Rock Concert
110	Pneumatic Chipper
100	Jackhammer (at 1 meter)
90	Chainsaw. Lawn Mower (at 1 meter)
80	Heavy Truck Traffic
70	Business Office, Vacuum Cleaner
60	Conversational Speech, Typical TV Volume
50	Library
40	Bedroom
30	Secluded Woods
20	Whisper

[a]Source: *A Guide to Noise Control in Minnesota Acoustical Properties, Measurement, Analysis and Regulation*, Minnesota Pollution Control Agency (Figure 3, 2008)

Nighttime noise levels are in the low to mid-30 dBA range in the Project Area, which is typical of a low population, rural setting.

8.2.2 Impacts

Operation and maintenance of the wind turbines and associated facilities will create increased noise levels within the Project Area. The sound level varies with the speed of the blades and the distance of the listener from the turbine. The turbine speed, in turn, depends on the weather conditions. In general, on more windy days turbines can create more sound. However, increases in noise levels within the Project Area are expected to be minimal. In addition, the noise level of the wind itself tends to mask or overcome turbine noises, especially as distance from the turbines increases.

ACCIONA Windpower, the turbine manufacturer, provided sound power levels at turbine hub height for the ACCIONA AW1500 1.5 MW turbine (i.e., 80 m/262 feet) and for the ACCIONA 3.0 MW turbine (i.e., 105 m/344 feet). For the 1.5 MW turbine, the sound power level at the hub is 104.5 dBA, and for the 3.0 MW turbine, the sound power level at the hub is 106.7 dBA. The term "sound power level" means a logarithmic measure of the sound power in comparison to a specified reference level (or the sound power level of a source is expressed in decibels (dB) and is equal to 10 times the logarithm to the base 10 of the ratio of the sound power of the source to a reference sound power. The reference sound power in air is normally taken to be 10^{-12} watt).

The Applicant used these sound power levels at the hub to model the sound pressure levels at various distances from the hub and to compare these pressure levels with Minnesota Daytime and Nighttime L10 and L50 Limits for residential receptors (NAC-1) as stated in the Minnesota Rules part 7030.0040.

The Nighttime L50 limit of 50 dBA is the most stringent limit. The turbines were modeled to determine at what distance turbine noise would not exceed the 50 dBA limit. Turbines were modeled using the following sound propagation equation for a hemispherical point source:

The Applicant compared the sound power level (Lp) of the AW1500 1.5 MW wind turbine to the Minnesota noise standards and representative noise levels to assess noise levels for the Project (see **Tables 7-1, 8-2** and **8-3**).

The wind turbines will create sources of additional noise. Since the noise levels provided by ACCIONA Windpower, the turbine manufacturer, did not include any time-weighted average sound levels, the sound power levels at the turbine hub of 104.5 dBA for the 1.5 MW turbine and 106.7 dBA for the 3.0 MW turbine were converted to sound pressure levels and compared to the (MPCA) Daytime and Nighttime L10 and L50 Limits for residential receptors (NAC-1) as stated in the Minnesota Rules 7030.0040.

The Nighttime L50 limit of 50 dBA is the most stringent limit. The turbines were modeled to determine at what distance turbine noise would not exceed the 50 dBA limit. Turbines were modeled using the following sound propagation equation for a hemispherical point source:

$$Lp = Lw - 10 \log (2\pi r^2) - Aatm$$

where:

Lp is defined as the sound pressure level at the distance of interest (r);

r is the distance from the point source to the receiver;

Lw is the sound power level provided by the turbine manufacturer; and

Aatm is defined as the attenuation due to atmospheric absorption (assumed to be 0.005 dB/m, a value commonly used for such analysis).

Sound is generated from the wind turbine at points near the hub or nacelle, 80 to 105 meters in the air, from the blade rotation, and from motors near ground level. Therefore, the noise source could be considered both spherical and hemispherical. Use of the above sound propagation equation for a hemispherical point source at 80 m is therefore conservative and predicts the maximum distance for noise exceedances.

The distances calculated where an exceedance of the 50 dBA limit would no longer occur is 190 meters (623 feet) for the 1.5 MW turbine and 237 meters (779 feet) for the 3.0 MW turbine (**Table 7-1**). The Applicant anticipates that the distance setback to avoid exceeding 50 dBA at occupied residences would range from 190 to 237 meters (623 to 779 feet).

All the rural residences/farmsteads fall within NAC 1. Based upon the Applicant's preliminary setback determinations, no rural residences/farmsteads are located within 636 meters (2,085 feet) of the proposed turbine locations (**Exhibit 3**).

Recently, local residents near proposed wind projects have begun to raise a concern about impacts from low frequency sounds and infrasound. Low frequency sounds are typically those in the range of 10 Hertz to 200 Hertz. Hertz is a measure of the frequency of sound – one hertz is one cycle per second. The human ear can detect sounds only within a certain range of frequencies, usually 20 Hz to 20,000 Hz. Very low frequencies, below 20 Hz, are called infrasound, and are generally not detectable to the human ear.

The Public Utilities Commission in March 2009 asked the Minnesota Department of Health to conduct a literature survey regarding potential impacts of low frequency sounds and infrasound from wind turbines. The Department of Health delivered its report entitled *Public Health Impacts of Wind Turbines* on May 22, 2009. On July 21, 2009, in an entirely separate docket from any pending wind project, PUC Docket No. E-999/CI-09-845, the PUC published a Notice of Comment Period soliciting comments from interested stakeholders on the White Paper and on existing setback requirements to determine if current setback requirements for large wind energy conversion systems ("LWECS") are appropriate and reasonable.

The Commission is continuing to investigate the matter of low frequency sounds and infrasound from wind turbines but the Applicant concurs with the comments of other wind developers filed in Docket No. 09-845 that compliance with state noise standards is sufficient to ensure that public health is protected from adverse impacts caused by noise.

At the Project Substation, the source for noise is primarily the transformers, which can create a humming noise. While the location of the Project Substation has not yet been determined, the Applicant will locate the Project Substation to meet required noise setbacks from residences. The noise generated from the Project Substation and transmission lines is not expected to exceed approximately 30 dB under dry conditions, which is below typical background noise levels and, therefore, would not be audible at any receptor location. Under wet conditions, the noise level may be higher than 30 dB,

but it is not expected to exceed Minnesota noise thresholds. In addition, noise levels would be well below the noise standards established for NAC 1, as shown in **Table 8-2** above.

8.2.3 Mitigation

Possible noise impacts to nearby rural residences/farmsteads and other potentially affected parties will be considered in the design, siting and construction of the Bitter Root Project. As part of determining the final arrangement of the wind turbines the Applicant will perform its own in-house noise analysis to evaluate the expected noise levels at each receptor in and near the Project.

To avoid exceeding 50 dBA at occupied residences, the turbines will be setback from residences a minimum of 190 meters (623 feet), or a minimum of 237 meters (779 feet) with the larger turbines. In fact, preliminary siting has resulted in placement of no turbines within 636 meters (2,085 feet) of the closest residence and it is expected that, when final siting is complete, no turbines will be sited closer than 1,000 feet to a residence.

The Applicant will use a 5 RD setback from the perimeter of adjoining properties along the north-south axis (downwind spacing) and a 3 RD setback from the perimeter of adjoining properties on the east-west axis (crosswind spacing). The Applicant turbines will also be setback at least 5 RD from existing wind turbines to minimize the potential for the combined noise from multiple turbines to exceed the noise standards. The Applicant will use a minimum setback of 76 meters (250 feet) from public roads. If the sound characteristics of the selected turbine are different from those discussed in the Application, the Applicant will address setbacks to ensure compliance with MPCA noise standards.

8.3 Visual Impacts

8.3.1 Description of Resources

The topography of the Project Area is relatively flat with gently rolling hills and ridges with elevations that range from 408 to 531 feet above sea level. The typical visual landscape within the Project Area consists of agricultural fields, farmsteads, active and fallow fields, trees planted as windbreaks, gently rolling topography and few swales and water bodies (see **Exhibit 7**).

With the exception of the Lincoln Pipestone Rural Water System water treatment plant, which is more industrial in appearance, the majority of landscape within the Project Area can be classified as agricultural and rural open space. Within the Project Area local vegetation is predominantly agricultural crops and pasture, including corn, soybeans, small grains, and forage crops, which visually create a low uniform cover. A mix of deciduous and coniferous trees planted for windbreaks typically surrounds farmsteads which were established to prevent wind erosion and shelter dwellings. Occasional patches of native willows, cattails, sedges, and rushes are present in swales.

The farmstead residences and farm buildings within the Project Area are focal points in the open agricultural landscape. A number of the farm structures date back to the late 19th or early 20th centuries and are representative of that era of Minnesota farm architecture. Typically, the farmsteads and residences are located at lower elevations to avoid winds common to the area.

A wind turbine already existing in the City of Canby near the Project Area has slightly altered the landscape from agricultural to wind farm/agricultural. This wind turbine is located approximately three miles northeast of the Project Area and it is operated by the City of Canby. The turbine is most visually apparent upon approaching the City of Canby from the south and west along County State Aid Highways (CSAHs) and County Roads (CRs) in the vicinity of Canby. Other wind farms within the region are located between 21 and 92 miles south of the Project Area and include Lake Benton I and II, which were developed in the late 1990's (see **Exhibit 6**). Therefore, the presence and visual effect of wind turbines and larger wind farms have existed in the vicinity of the Project Area for approximately a decade.

8.3.2 Impacts

As with most aesthetic features, the visual effect the Project will have depends largely upon the perceptions of the observers. The visual contrast added by wind farms may be perceived as a visual disruption or as points of visual interest with their own aesthetic quality and appeal. Operation of the wind farm will not generate much traffic or significantly increase day-to-day human activity in the area. The Project Area will therefore retain its rural sense and remote character. The proposed Bitter Root Project would not involve any ongoing industrial use of non-renewable resources or emissions into the environment.

Wind farms may appear industrial to some. However, the turbines function to "farm" the wind for energy. While existing wind farms are located in the region of the Project Area, because the wind farms are not located in the immediate vicinity of the Bitter Root Project, the proposed Bitter Root Project should not cumulatively contribute to the visual effect of the existing wind farms. Additionally, the location of the proposed Bitter Root Project relative to the existing wind farms will limit the extent to which the proposed Bitter Root Project is viewed as a disruption to the area's scenic integrity.

The presence of turbines within the viewshed of wildlife management areas (WMAs) or other natural areas may also affect the natural quality of those areas being used by the public (**Exhibit 8**). While to some extent seeing turbines from the WMAs may interrupt that experience, the same is true of other human habitation or activities in the Project Area, and the presence of turbines may be less intrusive than these human activities. Nonetheless, some WMA users may perceive the Bitter Root Project to have negative visual effects.

8.3.3 Mitigation

The Applicant will work to avoid or minimize, to the extent possible, visual impacts into the final design and siting of the Bitter Root Project. The Applicant will work with landowners to identify aesthetic concerns. To address visual impacts of the proposed Bitter Root Project, the Applicant proposes the following mitigative measures:

- To minimize visual complexity, tubular style towers will be used, instead of lattice frame towers, and the proposed turbines will not be used for commercial advertising;
- Turbines will be uniform in color (a non-reflective off-white or light gray);
- Turbines will not be located in biologically sensitive areas such as county parks, WMAs, SNAs, WPAs, or wetlands;
- Turbines will be lit in accordance with the minimum FAA requirements for obstruction lighting appropriate for the height of turbines employed (e.g. the total number of lights on turbines will be minimized and all lights will be synchronized);
- Collector lines will be buried to minimize aboveground structures within the turbine array;
- Existing roads will be used for construction and maintenance where possible to minimize the amount of new roads constructed;
- Access roads created for the wind farm facility will be located on gentle grades to minimize erosion, visible cuts and fills; and
- Temporarily disturbed areas will be converted back to cropland or otherwise reseeded to blend in with existing vegetation.

8.4 Public Services and Infrastructure

8.4.1 Description of Resources

Local Services The Project is located in a lightly populated, rural/farming area in southwestern Minnesota. Public services to farmsteads and rural residences within the Project Area include transportation/roadways, electric and the Lincoln Pipestone Rural Water System water treatment plant (although most farmsteads appear to have their own potable water supply and onsite domestic waste systems as discussed below). The closest city to the Project Area is the City of Canby (City) located approximately 3½ miles northeast of the Project Area. The City provides sanitary sewer, water, cable television, telephone, and library services to its residents. Additionally, the City's emergency services include a volunteer fire department, an ambulance service, and a police department. There are no active railroad lines in the Project Area.

Electrical Service There is currently one electric transmission line within the Project Area. Otter Tail Power Company (OTP) has a 115 kV transmission line running across the north portion of the Project Area.

Water Supply Townships within the Project Area have limited public infrastructure services. Homes and farmsteads typically utilize on-site water wells and septic systems for individual household and farming needs. The Lincoln-Pipestone Rural Water System operates a water treatment plant and associated water wells in the northwest corner of the Project Area. A water pipeline currently runs along the eastern edge of the Project Area, which is also operated by Lincoln-Pipestone Rural Water.

Roads Existing roadway infrastructure in and around the Project Area consists of county and township roads that generally follow section lines, in addition to private unpaved farmstead driveways and farming access roads. Various County State Aid Highways (CSAHs), State Trunk Highways (STHs), County Roads (CRs), and township roads provide access to the Project Area, which are either two-lane paved or gravel roads.

There are no U.S. Trunk Highways or federal roads within the Project Area. U.S. Trunk Highway 75 (U.S. 75) is the only federal highway near the Project Area. U.S. 75 is approximately three miles east of the eastern edge of the Project Area and runs north/south through the City.

There are a number of CSAHs within the Project Area. Two CSAHs are paved asphalt (30 and 36) and the remaining roads are dirt and gravel. In Yellow Medicine County, STH 68 runs east-west along the northern portion of the Project Area. CSAH 20 runs through the southern end of the Project Area on the county line between Yellow Medicine and Lincoln counties, which continue in Lincoln County to the southern edge of the Project Area.

Traffic The existing traffic volumes on the area's county roads and highways are documented in **Table 8-4** and **Exhibit 9**. For purposes of comparison, the functional capacity of a two-lane paved rural highway is in excess of 5,000 vehicles per day, or Annual Average Daily Traffic (AADT). The highest existing AADT in or near the Project Area is 3,200 vehicles per day along CSAH 30/210th Avenue southwest of the City. The AADT for STH 68 on the west side of the City is 2,100, which reduces to 1,200 approximately two miles west of the City. The AADT for U.S. south of the City is 1,200. Along the remaining county highways, the AADTs are at or below 700 vehicles per day. The additional traffic anticipated by the construction and operation of the Project is not expected to reach levels that would create problems for the regional roadway system.

Table 8-4: Existing Daily Traffic Levels

Roadway Segment Description		Existing Annual Average Daily Traffic (AADT)
Yellow Medicine County	From City of Canby to west on STH 68	2,100 and then 1,200
	Trips at Minnesota/South Dakota border on CSAH 20	700

Table 8-4: Existing Daily Traffic Levels		
Roadway Segment Description		**Existing Annual Average Daily Traffic (AADT)**
	U.S. south of City of Canby	1,200 and then 670
	Township Road southwest of City of Canby (190th Avenue)	670
	CSAH 30/210th Avenue southwest of City of Canby	3,200
	STH 68 in Lincoln County at border with South Dakota	700
	STH 22 in Duell County, South Dakota (extension from STH 68)	664
Lincoln County	U.S. 75 and CSAH 19 South of City of Canby	670
	CSAH 19 and 27 near Minnesota/South Dakota Border	370 and 381

[a]Sources: MnDOT 2006 Traffic Volume General Highway Map, Yellow Medicine County, MN; MnDOT 2006 Traffic Volume General Highway Map, Lincoln County, MN; South Dakota Statewide Traffic Flow Map (2007)

Telephone, Microwave, and Other Communication Reception Telephone service is provided by Qwest and other local telephone companies to farmsteads, rural residences and businesses in the area. Applicant retained Comsearch to complete a microwave search and interference study on existing non-Federal Government microwave telecom systems. Comsearch's Wind Power GeoPlanner provides a graphical representation of affected microwave paths and provides supporting technical parameters. Comsearch identified no microwave paths that intersect the Project Area. No other communication or electronic control facilities are known to exist within the Project Area.

8.4.2 Impacts

The Bitter Root Project is anticipated to have minimal effect on the existing services and infrastructure. The following is a brief description of the impacts that may occur during the construction and operation of the Bitter Root Project.

Local Services Possible impacts to the local services include coming into contact with pipelines which transport gas or other products or existing transmission lines during construction activities. In the event of an emergency, the City of Canby Police and volunteer Fire Department could respond to the site.

Electrical Service No disruption of power to residences or local businesses is anticipated to occur as a result of construction or operation of the proposed Project. The Project will require electrical service from the local provider at its temporary offices during construction and the Project may require a permanent connection from the local electric provider to provide power when the wind project is not generating electricity.

Water Supply A water supply will be necessary for the O&M facility, and a water supply well will be constructed for this purpose. Water usage during the operating period will be similar to small-business volume; less than 5 gallons-per-minute (gpm). Water use during construction may occur at a higher rate to provide dust control and water for concrete mixes and other construction purposes. Possible impacts to the Lincoln-Pipestone Rural Water System's buried water lines could occur during construction of the Project from trenching and road building activities.

Roads Equipment and materials used in construction of wind farms can be extremely heavy. Possible weight related impacts to roads include physical damage to the structure of the road itself and/or damage to culverts and bridges. On August 21, 2008, the Fortier Township in Yellow Medicine County provided comments regarding the Project (see **Appendix E**). Fortier Township indicated its support of the Project as well as its concern over Township roads, bridges, culverts, approaches and intersections. Fortier Township stated that it should not be responsible for the cost of infrastructure that strictly benefits the Project, and that should not be liable for injury or damage to Township infrastructure associated with the Project. Fortier Township indicated that the Applicant should be responsible for placing barricades or warning devices on damaged or closed roads during construction or maintenance work, and it requested that all roads, bridges, culverts, approaches and intersections be left in as good or better condition than before construction of the Bitter Root Project.

On August 13, 2008, the Minnesota Department of Transportation (MnDOT) provided comments regarding the Project (see **Appendix E**). MnDOT provided the following comments: 1) MnDOT requests that individual wind towers are to be located at a distance from the public road right of way that is greater than the overall height of the towers, including blades; and 2) MnDOT expects the Applicant to obtain, file and submit all required MnDOT permits, including permits to complete the necessary work in MnDOT's right of way, such as transportation of turbines and equipment to and from the site.

Approximately 20 to 25 miles of new gravel access roads will be constructed for the Project, depending on the size of turbine selected and final design. These access roads will also be used during operation of the Project by operation and maintenance crews for gaining access to inspect and service the wind turbines. In general, the access roads will be located between the towers. During construction, the roads will be approximately 40 feet in width to allow for cranes and equipment delivery. After construction is completed, the roads will be approximately 16 feet wide and low profile to allow cross-travel by farm equipment.

Traffic Impacts to traffic will be short-term and occur during the construction phase of the Project. Impacts will be from the transport of Project components to the Project Area and from the movements of construction workers. While the Project is located in an area of low population density, increased road traffic is expected in the short term during construction of the Project. Increased wear and tear of local roads is also expected from delivery of Project materials and equipment.

The maximum construction traffic is expected to be approximately 100 additional vehicle trips per day, with an estimated daily average of about 50 vehicles. The functional capacity of a two-lane paved rural highway is in excess of 5,000 vehicles per day. As indicated above, the heaviest traffic is on State Trunk Highway 68 along the northern edge of the Project Area at approximately 3,200 AADT. Most of the county roads and CSAH in the Project Area have AADTs at or well below 700. Since many of the area roadways have AADTs currently well below capacity, the addition of 100 vehicle trips would be perceptible, but similar to seasonal traffic increases such as observed during autumn crop harvest. Truck access to the northern portion of the Project Area is generally served by State Trunk Highway 68. Once the Project is completed, maintenance crews consisting of 3-5 full-time employees will periodically drive through the Project Area to monitor and maintain the wind turbines. Turbines and substations will occasionally require repair, which will create a temporary slight increase in area traffic.

On August 4, 2008, the Lincoln County Highway Department (LCHD) provided comments regarding the Project (see **Appendix E**). The LCHD indicated it is concerned over possible traffic impacts to CSAH 20 and other roads due to the construction process, including need for access and permitting oversized loads. The LCHD requested that it be kept advised of the proposed construction.

Construction traffic will use the existing road systems for access to the Project Area. Current traffic levels on the affected roadways in the Project Area are well below roadway capacities and construction traffic will be perceptible but similar to seasonal variations in traffic, such as autumn harvest. Therefore, construction activities are not expected to affect traffic levels. Operation and maintenance activities will also not noticeably increase traffic within the Project Area.

Telephone, Microwave, and Other Communication Reception Construction of the Project could impact existing telecommunications infrastructure during site grading, excavation and trenching activities. The Applicant conducted a microwave beam path study to determine where infrastructure may exist so it can be avoided. The results of the microwave beam path analysis determined that there are no microwave beam paths intersecting the Project Area. Construction and operation of the proposed wind farm is intended to not impact the telephone service to the Project Area. Therefore, no detrimental impacts to radio and television reception are anticipated. The Applicant will not operate the wind farm so as to cause microwave, radio, telephone, television or navigation interference contrary to FCC regulations or other law.

8.4.3 Mitigation

Construction and operation of the Project will be in accordance with all associated federal, state, and local permits and laws, as well as industry construction and operation standards. The Project is anticipated to have minor effects on the existing infrastructure during Project construction and operation. Therefore, extensive mitigation measures are not proposed.

Local Services The Applicant will register the tower locations with each county's 911 system. With the addition of substation and transmission capacity, no impact to local services is anticipated and no other mitigation is proposed.

Electrical Service The Applicant will purchase station service from a local electrical utility. MAPP will suggest appropriate configurations for the electrical system and the Applicant will abide by the recommendations to prevent impacts to the existing transmission system. The Applicant has established a setback of 400 feet from existing transmission lines (see **Table 7-2**). No additional mitigation is proposed.

Water Supply The Project will contact the Lincoln-Pipestone Rural Water System prior to construction to obtain the locations of water pipelines and wells associated with water treatment plant to avoid impacts to the system.

Roads The Applicant will work with Fortier Township and MnDOT regarding roadway concerns, right-of-way work (if any), and setbacks during construction of the project. The Applicant will also work closely with the landowners in the placement of access roads to minimize land-use disruptions during construction and operation of the Project to the extent possible.

Traffic Because of the rural location of the Project, and the relatively low volumes of traffic on adjacent roadways, significant impacts to area traffic are not anticipated. The Applicant will notify Township and County road officials of the construction schedule and the Applicant will repair road damage occurring during construction of the Project. Specific additional truck routes will be dictated by the location required for delivery. Additional operating permits will be obtained for oversized truck movements. The Applicant will work with LCHD regarding traffic, access, and permitting oversize loads during construction of the Project. No other mitigation measures are proposed.

Telephone, Microwave, and Other Communication Reception Gopher State One Call will be contacted prior to construction to locate and avoid all underground facilities. To the extent Project facilities cross or otherwise affect existing telephone lines or equipment, the Applicant will make arrangements with applicable service providers to avoid interference with such facilities. No impacts are anticipated to microwave or television and therefore no mitigative measures are proposed.

8.5 Cultural and Archaeological Resources

8.5.1 Description of Resources

The proposed Project Area is located within the Prairie Lake South Region (2S) (Anfinson 1990). The Prairie Lake South Region (2S) is located in southwestern and south-central Minnesota and includes all of Yellow Medicine and the northern part of Lincoln counties. Topography includes the swell and swale topography of a ground moraine and soils consist of medium to fine textured prairie soils. Habitation sites in this region are commonly located near wooded areas and near major lakes or river valleys. Resource procurement sites may be located in upland settings, but more commonly would be found along areas near water's edge.

In July 2008, the Applicant conducted a review of records at the Minnesota State Historic Preservation Office (SHPO) and Office of the State Archaeologist (OSA) for the Project Area and industry standard one mile buffer. The background literature search identified six historic architectural properties and eight archaeological sites located within one mile of the proposed Project Area.

Inventoried historic architectural properties include: one school (YM-FOR-003), one rock wall (YM-FOR-004), one state line marker (YM-FOR-005), one bridge (YM-FOR-006), one museum (YM-FLD-005) and one farmstead (YM-FLD-006). With the exception of the state line marker (YM-FOR-005), none of these properties has been evaluated for National Register of Historic Places (NRHP) eligibility.

Previously identified archaeological properties include: 21YM0026, 21YM0027, 21YM0030, 21YM0051 (the Lazurus Creek I Site), 21YM0052 (the Lazurus Creek II Site), 21YM0069, 21YM0070, and 21YM0071. None of these archaeological sites has been evaluated for NRHP eligibility. In general, the Project Area has been poorly surveyed for cultural resources.

On August 5, 2008, the Applicant sent the Minnesota SHPO a letter informing it of the Project. In a letter dated September 5, 2008, SHPO recommended that an archeological survey be completed for the proposed Project following appropriate standards (see **Appendix E**). SHPO indicated that if the Project Area can be documented as previously disturbed or previously surveyed, it will re-evaluate the need for a survey. SHPO also indicated that its response did not address requirements of Section 106 of the National Historic Preservation Act of 1966 and 36 CFR 800, procedures of the Advisory Council on Historic Preservation for the protection of historic properties, and that if the Project is considered for federal assistance or requires a federal license or permit, this should be submitted to SHPO with reference to the appropriate federal agency.

8.5.2 Impacts

While the Applicant will attempt to avoid archeological sites, the proposed construction activities for the Project have the potential to impact such sites or to add to the visual impacts in the region of the Project Area.

8.5.3 Mitigation

In accordance with SHPO comments, a Phase I Archaeology Survey will be conducted for all the proposed wind turbine locations, access roads prior to construction, O&M facility, Project Substation, junction boxes, and areas of construction impact for the proposed transmission line to document previously unrecorded archaeological sites within the Project Area. A Phase I Archaeology Survey consists of the following tasks: consultation, documentation, reconnaissance field survey and identification.

The Applicant will attempt to avoid impacts to identified archeological and historic resources to the greatest extent practicable. If archaeological sites are found during the Phase I survey or during construction, the integrity and significance of such sites will be addressed in terms of the site's potential eligibility to the NRHP. If such sites are found to be eligible for the NRHP, appropriate mitigative measures will be developed in consultation with Minnesota SHPO, the State Archaeologist, and consulting American Indian communities. While avoidance would be a preferred action, mitigation for Project-related impacts on NRHP-eligible archaeological and historic resources may include resource or additional documentation through data recovery.

8.6 Recreational Resources

8.6.1 Description of Resources

Information from the U.S. Fish & Wildlife Service (USFWS), Minnesota Department of Natural Resources (DNR), and Lincoln and Yellow Medicine counties was reviewed to identify recreational resources within and nearby the Project Area. Recreational resources in Yellow Medicine and Lincoln counties include hiking, biking, boating, fishing, camping, swimming, horseback riding, snowmobiling, golfing, skiing, hunting, and nature viewing. Recreation areas, DNR Wildlife Management Areas (WMAs) and Scientific and Natural Areas (SNAs), and USFWS Waterfowl Production Areas (WPAs) that are present within and near the Project Area are shown on **Exhibit 8**. No formally designated county or state recreation areas are located within the Project Area.

The DNR manages WMAs to provide wildlife habitat, improve wildlife production, and provide public hunting and trapping opportunities. As such, WMAs are closed to all-terrain vehicles and horses to avoid negative effects on wildlife habitat. Upon review of available information, the following WMAs were identified within the Project Area (see **Exhibit 8**):

- Penthole State Wildlife Management Area (approximately 31 acres);
- Sioux Nation State Wildlife Management Area (approximately 487 acres);

- Bohemian State Wildlife Management Area (approximately 665 acres); and
- Saum Memorial Wildlife Management Area (approximately 81 acres).

SNAs are managed to protect rare and endangered species habitat, unique plant communities, and significant geologic features that possess exceptional scientific or educational values. No SNAs were identified within the Project Area. The nearest SNA is the Yellow Bank Hills SNA, an example of native prairie grassland, which is located approximately 21 miles north of the Project Area in Lac Qui Parle County near Nassau, Minnesota (Twp 118N, Range 46W, Section 4).

The USFWS manages WPAs to protect breeding, forage, shelter and migratory habitat for waterfowl or wading birds, such as ducks, geese, herons and egrets. The Project Area contains private lands with federal grassland and wetland easements as well as several federally-owned WPAs (see **Exhibit 8**). On private lands subject to wetland easements, the USFWS has easement rights over only the wetlands. However, on private lands subject to grassland easements, the USFWS has easement rights over the entire parcel. Based on review of available information, the Project Area contains the following two WPAs (see **Exhibit 8**):

- Kontz Waterfowl Protection Area; and
- Dakota Waterfowl Protection Area.

There are three lakes located within, or partially within, the Project Area; two in Yellow Medicine County and one in Lincoln County. Two of these lakes are located within the Bohemian State WMA. The third lake, Culvert Lake, is located in the northwestern portion of the Project Area and straddles the Minnesota/South Dakota border. Only a small portion of this lake extends into Minnesota and the Project Area. Lakes in the vicinity of the Project are primarily used for recreational boating and fishing.

There are no county parks or state parks within or near the Project Area. In Yellow Medicine County the State Line Wayside Park is located just inside the northwestern portion of the Project Area. The park is located along the south side of State Trunk Highway 68, directly northeast of Culvert Lake.

There are no documented snowmobile trails located within the Project Area. The nearest known snowmobile trail is located southwest of the Project Area near Lake Hendricks. There are also no documented All Terrain Vehicles (ATV) trails or facilities located within the Project Area, with the nearest such facility located northeast of the Project (the Appleton Area Recreational Off Highway Vehicle (OHV) Park).

8.6.2 Impacts

The Applicant will design the Project to avoid all recreational resources. Direct impacts to WPAs and other USFWS lands are not planned or expected. However, impacts to recreational resources could be visual in nature, affecting individuals using public land near the Project Area. Section 8.3 discusses visual impacts and proposed mitigation. Visual impacts will be most evident to visitors using the WMAs, lakes, and public parks

within a five-mile radius of the Project Area. Significant impacts are not anticipated. Because of the distance to the nearest SNA, no visual impacts to SNAs are affected.

8.6.3 Mitigation

Encroachments by the Project into WMAs, SNAs, WPAs, county parks, easement wetlands and grassland easement lands are not planned or expected. If impacts to such lands are determined necessary in the final design stages of the Project, the Applicant will further coordinate with the appropriate agency, including the USFWS, the DNR, or the affected county for necessary permits and approvals prior to construction.

8.7 Public Health and Safety

8.7.1 Description of Resources

Air Traffic There are no airports located within the Project Area. The nearest airport is the Canby Municipal Airport (Canby Airport) located approximately 5.4 miles northeast of the Project boundary and one mile north of the City of Canby. The Canby Airport has one asphalt runway that is 4,648 feet in length, and sits at an elevation of 1,194 feet above mean sea level. The Canby Airport caters primarily to single engine airplanes and handles, on average, 129 flights per week. The Sioux Valley Hospital located in Canby has a heliport for transporting patients. The roughly 90 by 90 foot circular concrete pad is situated at an elevation of 1,244 feet above mean sea level.

Another privately-owned airport, Mulder Field, Inc. Airport, is located approximately 12 miles southeast of the Project Area near Ivanhoe, Minnesota. A publicly-owned airport is also located approximately 18 miles northwest of the Project Area near the City of Clear Lake, South Dakota. Air traffic may also be present within or near the Project Area for aerial application (crop dusting) of agricultural fields. Aerial application is typically done during the day by small, highly maneuverable aircraft. Local aircraft applicators may be familiar with crop dusting in areas were wind farms are constructed.

Electromagnetic Fields Electric and Magnetic Fields (EMF) are the electric and magnetic fields that are coupled together, such as in high frequency radiating fields. The term EMF refers to electric and magnetic fields that are present around electrical devices. Electric fields arise from the voltage or electrical charges and magnetic fields arise from the flow of electricity or current that travels along transmission lines, power collection (feeder) lines, substation transformers, house wiring, and electrical appliances. The intensity of the electric field is related to the voltage of the line and the intensity of the magnetic field is related to the current flow through the conductors (transmission line wire). Once energized, the proposed facility will generate electromagnetic fields.

Safety and Security The proposed wind farm site is located in an area that has a relatively low population density. Census data from the year 2000 indicates that a little more than 17,500 people reside within these two counties, which comprise roughly 1,311 square miles. That constitutes about 13 people per square mile.

8.7.2 Impacts

Air Traffic The Project is not expected to create significant impacts to air traffic in the region because there are no airports located within the Project Area and only two facilities are located within approximately five miles of the Project (Canby Airport and Sioux Valley Hospital heliport). The installation of wind turbine towers in active croplands and installation of overhead collection lines, if needed, increases a potential for collisions with crop-dusting aircraft. However, overhead collection lines are expected to be similar to existing distribution lines (located along the edges of fields and roadways) and the turbines would be visible from a distance and lighted according to FAA requirements.

The Applicant contacted the FAA on July 29, 2008 for comments on the proposed Project. On July 29, 2008, the FAA responded that the Applicant should submit application for a hazard determination by the FAA for the Project, which is located off airport property (see **Appendix E**). The Applicant will work with the FAA regarding the hazard determination and coordinate siting and lighting of the wind turbines.

Electromagnetic Fields The potential impact of electromagnetic fields (EMF) on public health has been well studied and documented. The Minnesota Department of Health has stated that "the current body of evidence is insufficient to establish a cause and effect relationship between EMF and health.[9]

Safety and Security The Project will add to the number of emergency response locations within the EM systems of both Lincoln and Yellow Medicine counties. Wind turbines constructed as part of the Project will be registered with both EM emergency response systems and the Applicant will work with the respective County EMs to develop appropriate response procedures. The Project Area is located in a lightly populated rural/farming area. Construction and operation of the Bitter Root Project is expected to have little or no impact on the security and safety of local residents.

As with any large construction project, some risk of worker or public injury exists during construction. However, the Applicant and its construction representatives and workers will prepare and implement work plans and specifications in accordance with applicable worker safety requirements during construction of the Project. Because of the remote location of the Project, there is a low potential for unauthorized access to turbines or related Project facilities. The Applicant will also control public access to the Project during construction via site control by the construction management contractor and during operation via appropriate fencing, gates, etc.

During operation of some existing wind farm projects, wind turbines have posed hazards to human safety from tower collapse and blade throw, typically as a result of seismic events. The Project Area is within a region considered to have low seismic

[9] "A White Paper on Electric and Magnetic Field (EMF) Policy and Mitigation Options," prepared by the Minnesota State Interagency Working Group on EMF Issues (page 38). Note: the Working Group consists of the Minnesota Department of Health, Minnesota Department of Commerce, Minnesota Public Utilities Commission, Minnesota Pollution Control Agency, and Minnesota Environmental Quality Board.

activity (USGS, 2002 and 2007). Although Minnesota has one of the lowest occurrence levels of earthquakes in the United States, a total of 19 small to moderate earthquakes have been documented since 1860. Existing information suggests that, although weak to moderate earthquakes do occur occasionally in Minnesota, a severe earthquake is very unlikely (V.W. Chandler, 1994). Furthermore, improvements to modern turbine technology, in addition to proactive maintenance and inspections, have reduced these risks to insignificant rates. Therefore, safety issues from seismicity and blade throw are not considered likely for the proposed Project.

8.7.3 Mitigation

Air Traffic The Applicant will work with and coordinate siting the wind turbines with the FAA. The wind turbines and meteorological towers will be equipped with lighting in compliance with FAA requirements. The Applicant will notify local airports, aerial applicators, and hospitals regarding the new towers and turbines to reduce the risk to crop dusters, emergency helicopters, and other local aircraft.

Electromagnetic Fields While there is no conclusive research evidence that EMFs pose a significant health impact from power lines and wind turbines, the new facilities will be installed no closer than 500 feet from occupied residences, where EMF will be at background levels. The rural location of this Project and the electrical lines minimizes the potential of any significant exposure to EMF in the area. Although the presence of a cable system may be perceived as a novel source of public health, in fact the collection system consists of buried electric cable (to a depth of four feet) running between the turbines (and thus is removed from common public access), or is transmitted via overhead lines in the manner of existing telephone and electrical distribution.

Safety and Security While no impact to the security of local residents is expected as a result of construction or operation of the Project, the Applicant will use the following security measures to reduce the possibility of property damage or personal injury at the Project site:

- Towers will be placed 250 feet from public roads and at least of 623 feet (1.5 MW turbines) to 788 feet (3.0 MW turbines) from occupied homesteads. These distances are consistent with prior LWECS site permits issued by the Minnesota PUC;
- Contractors will use proper construction and maintenance methods to ensure minimal impacts to workers and public health and safety;
- The Applicant and its contractors provide temporary (safety) and permanent fencing, warning signs, and locks on equipment and wind power facilities during construction and operation of the Project;
- The Applicant will conduct regular operation and maintenance and inspections during the life of the Project to address potential blade failures, minimizing the potential for blade throw. If problems are identified, the Applicant will perform immediate repairs;

- Turbines will be situated on solid steel enclosed tubular towers where electrical equipment will be located, except for the pad-mounted transformer. Access to the tower will only be allowed through a steel door that will be locked when not in use. External electrical equipment will be clearly marked with appropriate warning signs; and
- Where necessary, the Applicant will construct gates or fences around the facilities.

8.8 Hazardous Materials

8.8.1 Description of Resources

Potential hazardous materials within the Project Area will be associated with agricultural use of the land, which includes use of petroleum products (diesel fuel, gasoline, natural gas, heating oil, lubricants, and maintenance chemicals), pesticides and herbicides. Older farmsteads may also contain lead-base paint, asbestos-containing building materials (e.g. shingles and siding), and polychlorinated biphenyls (PCBs) in electrical transformers. Unmarked farmstead waste dumps, which may contain various types of wastes are also commonly found in rural/farming areas. The Applicant will conduct a Phase I Environmental Site Assessment (Phase I ESA) of the Project Area to assess the environmental condition of the Project Area, to identify recognized environmental conditions (RECs), which may include hazardous materials, and to site the wind turbines and associated Project facilities in locations that avoid such areas.

During construction, vehicles and equipment will use gasoline, diesel and other petroleum products. In operation, the Project is not expected to generate significant amounts of hazardous waste or materials. The wind turbines will use gear box oil, hydraulic fluid, and gear grease.

Diesel and gasoline may be stored at the O&M facility for use by operation and maintenance personnel. If this occurs the fuel will be stored in appropriate storage tanks.

8.8.2 Impacts

The Applicant will design and construct the Project to avoid farmsteads and other buildings by at least 500 feet, thereby avoiding potential hazardous materials and unmarked waste dumps. Therefore, impacts from hazardous materials are not anticipated.

Hydraulic oils and lubricants used within the wind turbines will be contained within the turbine nacelle. Small amounts of hydraulic oil, lube oil, grease, and cleaning solvent may be stored in the O&M facility in accordance with applicable regulation for such storage.

If diesel and gasoline fuels are stored in tanks at the O&M facility during operation of the Project, spills and leaks may be released during refilling and refueling activities.

8.8.3 Mitigation

Fuels and lubricants for vehicles and maintenance equipment will be properly stored and contained according to applicable local, state and federal regulations at the O&M facility. In the event that storage capacities for operating the Project trigger the need for registering the storage tanks with the Minnesota Pollution Control Agency (MPCA), the Applicant will prepare and submit the MPCA Aboveground Storage Tank (AST) Notification Form. Transformer oil will be contained within the electric transformers, and fluid levels will be monitored during regular maintenance at each turbine and transformer location. When fluids and lubricants are replaced, the waste products will be handled and disposed of according to local, state and federal regulations through an approved waste firm. The wind turbines have secondary containment for the fluids in the nacelle. All fluids stored on site have appropriate secondary containment provisions. Material Safety Data Sheet (MSDS) information is available to all site personnel. Response procedures and training will be in place in the event of an environmental incident.

The health and safety of the people at the site are of paramount importance to the Applicant. The Applicant's safety program is based on instilling a "culture of safety" across every activity and in every situation. Every morning, every person at the Project participates in a safety meeting. General site safety training and task specific safety training is required of all personnel. Extensive, detailed, and task specific Lock Out/Tag Out procedures have been developed and are used as required.

8.9 Effects on Land-Based Economics

8.9.1 Description of Resources

Agriculture The Project Area is mainly used for agricultural purposes as farmland and grassland, as shown in the Land Cover Map, **Exhibit 10**. Cultivated land comprises approximately 9,871 acres of the Project Area (44 percent), and grasslands comprise approximately 8,076 acres of the Project Area (36 percent). Corn and soybeans are grown throughout Yellow Medicine and Lincoln counties, and raising hogs and pigs is also a major source of income. Within the Project Area, the trend is toward fewer and larger farms, as it is within many rural Minnesota communities.

Most of the soil within the Project Area is considered prime or important farmland (**Exhibit 11**). The Yellow Medicine Comprehensive Plan indicates that 70.8 percent of the County is considered prime farmland and 19.5 percent is considered "good" or important farmland. **Exhibit 11** indicates the soils considered Prime (42.5%) and other farmland of statewide importance (19.0%) for Yellow Medicine and Lincoln counties. Both counties offer conservation programs that compensate landowners for setting aside wetlands and grasslands for conservation purposes, or employing conservation practices on their land. These programs provide another source of income for local farms and landowners. Some of these programs include the Conservation Reserve Program (CRP), Reinvest in Minnesota (RIM), Wetland Reserve Program (WRP), and the Environmental Quality Incentive Program (EQIP). These programs vary in their

requirements, payments, and the length of time for which a piece of property must be enrolled. Some of these easements are perpetual in nature. **Exhibit 12** displays CRP lands within the Project Area.

Large-scale animal production has been a growing component of the agricultural industry in recent years, and feedlots used for the confined feeding, breeding or holding of animals are a common practice for animal production. The MPCA is the state agency charged with regulating animal feedlots in Minnesota. Counties may also be delegated by the MPCA to administer the program for feedlots that are not under federal regulation. There are currently 316 registered feedlots in Yellow Medicine County and 435 registered feedlots in Lincoln County that have 50 or more (10 in shoreland districts) animal units (MPCA 2007).

Forestry There are no significant forestry resources within the Project Area. Minnesota Land Cover Classification mapping (**Exhibit 10**) indicates that only two percent of the Project Area is forested. Yellow Medicine and Lincoln counties are located within a region historically dominated by tallgrass prairies where growth of forests is generally inhibited by the low amount of precipitation and the relatively high summer temperatures that are characteristic of the prairie biome (Tester, 1993). Therefore, economically important forestry resources are not found in this region of Minnesota. Farmsteads within the Project Area typically contain forested areas in the form of woodlots and shelterbelts. Forested areas are also found near waterbodies within these counties.

Mining There are no significant mining resources within the Project Area. Mineral deposits in this portion of southwestern Minnesota consist primarily of sand and gravel from unconsolidated surficial deposits and bedrock and granite outcrops located near and within the Minnesota River Valley (Yellow Medicine County Comprehensive Plan, 2006). Sand and gravel resources occur in glacial till and outwash deposits. Many of the pits are either inactive, abandoned or their use is limited to the landowner. Based on a review of the June 2, 2003 MnDOT General Highway Map of Yellow Medicine County and the April 2, 2002 MnDOT General Highway Map of Lincoln County, two gravel pits are located within the Project Area: one is an inactive MnDOT pit (No. 87050) and the other is an active gravel pit (No. 87046). They are both located in the far northwestern corner of the Project Area on either side of State Trunk Highway 68 near Lazarus Creek. During a recent site visit to the Project, however, there was no activity observed with the active gravel pit and it is assumed to be minimally used.

8.9.2 Impacts

Agriculture During its life, the Bitter Root Project will permanently impact approximately 120 acres of cropland and rangeland for construction of structures, access roads, collection lines, and associated infrastructure. Construction activities associated with the Bitter Root Project (e.g. grading, soil compaction, access roads, turnaround areas, temporary construction staging areas, etc.) will also temporarily impact approximately 300 acres of agricultural land. The Applicant is currently in the process of determining impacts to prime farmland. Specific temporary and permanent

impacts to all agricultural lands will be determined once turbine, road, Project Substation, and O&M facility locations have been finalized. Drain tiles may be impacted by construction activities.

Overall, impacts to agriculture as a result of the Project are anticipated to be short term, minimal, and they will not significantly alter crop production. Once in operation, it may be occasionally necessary for the Applicant to complete repairs, or clear vegetation around a turbine or facility, which could result in additional temporary impacts to agricultural operations. These interruptions are anticipated to be infrequent and short term.

Some livestock operations and pasture land may be temporarily disrupted during the installation of the wind turbines and associated infrastructure. Aside from the specific areas where wind turbines, roads, and infrastructure are physically located, the remaining portions of the property will be available for grazing and use by livestock. The Project will have littleor no long-term effects on the ability of the land to be productive for raising livestock.

Forestry No impacts to forestry resources are anticipated. Forested areas near farmsteads and waterbodies will be, for the most part, avoided by the proposed Project. While significant tree removal is not anticipated, some trees and limbs may occasionally need to be removed to install access roads, or trimmed to prevent damage to electrical lines from wind and ice, and to ensure reliable operation.

Mining No impacts to mining resources or operations are anticipated.

8.9.3 Mitigation

Agriculture To the greatest extent possible, the Applicant will locate wind turbines, access roads and associated facilities to avoid or minimize temporary and permanent impacts on farmland. Only land for the turbine, access roads, and supporting infrastructure will be permanently taken out of crop production. Additional farmland may be temporarily impacted for use during construction as staging and access areas. To the extent practicable, staging areas will be placed in previously disturbed locations to minimize the impact to agricultural production. In the event that there is damage to drain tiles or other property as a result of construction activities or operation of the Project, the Applicant will work with affected property owners to repair the damaged property.

Turbine and facility siting will include discussions with property owners to identify features on their property, including drain tiles, which should be avoided during construction. Significant impacts to drain tiles and other existing facilities due to Project construction and operation are not anticipated. Only land for the turbine, access roads, and supporting infrastructure will be permanently taken out of crop production. Additional farmland may be temporarily impacted for use during construction as staging and access areas.

Soil compaction is a temporary impact. The construction equipment used in the erection of wind turbines, much like agricultural equipment, is designed with wide tires and tracks to distribute their weight over a larger area. This minimizes the degree of soil compaction resulting from construction. Once construction is complete the Applicant will assess disturbed areas and determine whether excessive soil compaction has occurred with the affected landowner(s). In those areas where excessive soil compaction has occurred due to the Project, the Applicant will work with the landowner and negotiate an appropriate corrective action (e.g. by tilling, chiseling, or other methods).

To the greatest extent practicable, staging areas will be placed in previously disturbed locations to minimize the impact to agricultural production. While significant impacts to drain tiles and other existing facilities due to Project construction and operation are not anticipated, the Applicant will develop and implement a drain tile mitigation plan. This plan will address steps that will be taken to avoid, repair or replace drain tile that may be impacted by the Project. The Applicant will design and construct access roads, buried utilities, overhead utilities and other ground disturbing activities to avoid existing drain tiles. In the event a drain tile becomes inadvertently damaged, the Applicant will implement a drain tile mitigation plan and repair or replace the impacted drain tile. Prior to beginning any site work, the Applicant will contact the landowner where the work will be conducted and review the location of the work and identify the presence of drain tiles or other drainage structures.

Impacts of the proposed Project on agricultural crops, livestock, native vegetation, and landscaped areas are anticipated to be minimal. Landowners will be reimbursed for potential damage incurred to crops, livestock, and property in a manner consistent with the terms of the easement agreement. Once the Project is completed, the Applicant will restore vegetation within disturbed areas as close as practicable to its original condition. Post-construction restoration will largely depend upon the amount of disturbance that occurs on the site and the soil types found there. The Applicant will keep landowners informed about work being completed on their property, and will direct contractors to ensure fenced pasture land remains secure. Sites used for temporary storage of material staging and access areas typically experience significant amounts of traffic, which will likely require tilling prior to seeding to loosen compacted soils.

The Applicant plans to avoid impacts to RIM land, and will minimize impacts to CRP land to the extent possible. If CRP land is impacted, the Applicant will work with the landowner and the local Farm Services Agency to remove the impacted portion of the parcel from the CRP program.

Forestry No impacts to forestry resources are anticipated and thus no mitigative measures are proposed. However, the Applicant will coordinate with affected landowners for replacement of trees lost on private property as a result of the Project.

Mining No impacts to mining resources are anticipated and thus no mitigative measures are proposed.

8.10 Tourism and Community Benefits

8.10.1 Description of Resources

Tourism in Yellow Medicine and Lincoln Counties focuses primarily on promoting the area's natural history, parks, historical sites, game and wildlife, lakes, farms, and small towns. Also publicized are cultural (museums, art, and antiques) and recreational activities (parks, hiking trails, camping, canoeing, horseback riding, fishing, wildlife refuges, snowmobiling, golf courses, swimming pools, tennis courts, and skiing). These counties also host a variety of festivities and cultural events throughout the year.

8.10.2 Impacts

No impacts to tourism and community benefits are anticipated and thus no mitigative measures are proposed. Wind farms in southwestern Minnesota are becoming an important tourism attraction and the addition of this Project to the community is expected to increase the draw of travelers to this area rather than deter visitors and tourism.

The community will benefit from the Bitter Root Project from the generation of a production tax assessed on the wind farm, which will go directly into the local government treasury and benefit the locate community (fire, police, education, etc.).

8.10.3 Mitigation

No impacts to tourism and community benefits are anticipated and thus no mitigative measures are proposed.

8.11 Topography

8.11.1 Description of Resources

In the Project Area, elevations range from 408 to 531 feet above mean sea level (AMSL). A topographic map of the Project Area is shown in **Exhibit 13**. Topography is gently rolling moraine. Steeper relief occurs in valleys along the eastern edge of the Project Area formed by Lazarus and Canby Creeks. Lazarus Creek flows east across the northern third of the Project Area, and Canby Creek flows east in the southern portion of the Project Area. At their steepest, valleys are cut into the landscape up to 60 feet.

The Project Area is located within the Coteau Moraine Subsection (251Bb), a subsection within the North Central Glaciated Plains Section (251B) of the biogeographic province known as the Prairie Parkland Province under the Ecological Classification System (ECS) developed by the MnDNR and the U.S. Forest Service. Subsection boundaries delineate a significant regional change in geology, topography, and vegetation. The Coteau Moraine Subsection consists of an area of transition from shallow deposits of windblown silt (loess) over glacial till to deeper deposits of loess.

8.11.2 Impacts

Siting and construction of the turbines, associated facilities, access roads and collection/transmission lines will require some grading. However, significant impacts to topography are not anticipated because the layout and siting will minimize cut and fill requirements by utilizing existing topographic contours as much as possible.

8.11.3 Mitigation

Because significant impacts to topography are not anticipated, no mitigative measures are proposed.

8.12 Soils

8.12.1 Description of Resources

Loamy well-drained soils with thick dark surface horizons (primarily historic prairie Mollisols - Aquolls and Udolls with some Borolls and Ustolls) are dominant within the Project Area. Cummins and Grigal (1981) map both dry prairie and moist prairie soils, with most of the dry prairie soils occurring on dissected or eroded topography. Moister prairie soils occur on rolling end moraines with variable local relief (the outer Coteau).

Soil associations for the Project Area and the surrounding area are mapped in **Exhibit 12**. A soil association has a distinctive pattern of soils, relief, and drainage. Each is a unique natural landscape consisting of one or more major soils and other minor soils. The association is named after its major soils. Two soil associations, the Flom-Barnes (~22,112 acres) and the Forman-Buse-Aastad (~322 acres), are found within the Project Area.

The Flom-Barnes is found on irregular complex slopes and smooth simple slopes of lake plains. These soils formed in loamy glacial till and are very poorly drained to moderately well drained. Depressions often are underlain by loamy sediments. Topsoil is 20 to 39 inches thick with a clay loam texture. Slopes range from 0 to 3 percent. The primary management consideration is wetness. The Forman-Buse-Aastad consists of well to moderately well drained soils on uplands and were formed in loamy glacial till. Slopes range from 0 to 40% and permeability is moderate or moderately slow. These soils are found in the highest elevations in Yellow Medicine and Lincoln counties.

8.12.2 Impacts

Construction of the wind turbines, associated facilities, access roads and collection/transmission lines will require some grading and will increase the potential for soil erosion during construction and convert prime farmland from agricultural uses to industrial uses. The amount of land that will be converted to wind turbines, transformer pads, associated facilities, access roads and collection/transmission lines will be determined once the site layout has been finalized. See Section 8.9 for a discussion of impacts to prime farmland. However, significant impacts to soil are not anticipated

because the layout and siting will minimize soil-disturbance activities by tying into existing topographic contours as much as possible.

8.12.3 Mitigation

The Applicant will obtain a construction National Pollutant Discharge Elimination System (NPDES) permit to discharge storm water from construction activities from the MPCA and prepare a Stormwater Pollution Prevention Plan (SWPPP). Best Management Practices (BMPs) will be used during construction and operation of the Project to protect topsoil and adjacent resources and to minimize soil erosion. Practices may include containing excavated material, protecting exposed soil, and stabilizing restored material. In addition, to the extent possible, the Applicant will site wind turbines and access roads to avoid or minimize conversion of prime farmland.

8.13 Geologic and Groundwater Resources

8.13.1 Description of Resources

As discussed in Section 8.11, the Project Area is located within the Coteau Moraine Subsection. The northeastern boundary of this subsection is marked by a steep escarpment which becomes less pronounced to the south. This subsection is part of a high glacial landform occupying Southwestern Minnesota, Southeastern South Dakota, and Northwestern Iowa. It is topped by Buffalo Ridge (1,995 feet AMSL) in northern Pipestone County. The high elevation is caused by thick deposits of pre-Wisconsin age glacial till (up to 800 feet thick).

There are two distinct parts to the subsection, the middle Coteau, and the outer Coteau. The Project Area is located in the outer Coteau. The outer Coteau, a series of terminal and end moraines separated by ground moraines, ranges from gently undulating to steeply rolling and hilly. A steep escarpment marks the northeast edge of the subsection. The escarpment is cut by several streams, which occupy narrow, straight ravines (Albert 1993).

Bedrock is covered by up to 600 to 800 feet of glacial till through most of the Coteau Moraine Subsection. Surficial geology of the Project Area consists of glacial sediments from both ground moraine and end moraine deposits, which are unsorted mixtures of clay, silt, sand and gravel.

Precambrian igneous and metamorphic rocks underlie the glacial deposits in the Project Area. Cretaceous sediments, consisting of interbedded shale, siltstone, and sandstone having thicknesses exceeding 600 feet (Setterholm, 1990), overlie Precambrian rocks in the Project Area southwest of the City of Canby. The bedrock elevation varies from 1,100 feet AMSL in the northeast to 900 feet AMSL in the southwest.

Geologic-related mineral resources in the Project Area include groundwater and minor sand and gravel deposits. Groundwater resources in the vicinity of the Project Area are generally derived from buried sand and gravel lenses. These sand and gravel lenses

are commonly thin and discontinuous, but generally provide water supplies adequate for domestic use. Locally, water supply may also be derived from underlying bedrock units.

The County Well Index (CWI) was reviewed for the Project Area and it indicated nineteen (19) domestic and, one (1) monitoring wells. Most of the wells listed in the CWI are screened in buried outwash deposits which are at least 20 feet thick. Approximately 12% of the wells in the CWI are screened in the Cretaceous sandstones ranging in depth from 50 to over 400 feet below ground surface. Yields from Cretaceous wells range from a few gallons-per-minute (gpm) to several tens of gpm (Woodward and Anderson 1986). Based on the age of many of the homesteads, some of the existing wells within the Project Area are probably not recorded in the CWI. This may indicate more domestic wells in the area than what is documented. Domestic groundwater supply appears to be fairly accessible in the Project Area. Yields may vary significantly depending on source.

Recharge to the water table occurs throughout the region via infiltration of precipitation, surface water runoff from area of lower to higher infiltration, and subsurface groundwater movement from adjacent areas. Sources of recharge include some lakes and wetlands and short reaches along stream segments.

As described previously in Section 8.4, the Lincoln-Pipestone Rural Water System operates a water treatment plant, associated water wells and a water pipeline within the Project Area.

8.13.2 Impacts

No impacts to geologic and groundwater resources are anticipated as a result of construction or operation of the Project. Water supply needs for the Project will be limited and relate to domestic water supply for the O&M facility which will be satisfied with either an on-site well or rural water service (if available). As the Project proceeds, Lincoln-Pipestone Rural Water System will be consulted to avoid any impacts to its system from the development of this Project. Construction dewatering may be required at certain locations of the Project and if needed the Applicant will conduct dewatering in accordance with applicable rules and regulations. Wells and borings are regulated in Minnesota and any borings drilled for this Project will likely be an Environmental Bore Hole (EBH), which is subject to Minnesota Department of Health (MDH) regulation.

8.13.3 Mitigative Measures

No impacts to geologic and groundwater resources are anticipated and thus no mitigative measures are proposed. The Applicant will follow MDH regulations concerning EBHs, if any, for the Project and applicable requirements for construction dewatering, if needed.

8.14 Surface Water and Floodplain Resources

8.14.1 Description of Resources

Surface water runoff is directed overland and through drain tile over agricultural areas to ditches, intermittent streams, and tributary creeks within the Project Area. U.S. Geological Survey topographic maps, and Minnesota Public Waters Inventory (PWI) were reviewed for surface waters (see **Exhibit 14**), and Federal Emergency Management Agency (FEMA) floodplain maps were reviewed for floodplain resources within the Project Area (see **Exhibit 12**). The major surface waters located within the northern half of the Project Area are part of the Lazarus Creek watershed. The major surface waters located within the southern half of the Project Area are part of the Canby Creek watershed. Both watersheds are tributaries of the Lac Qui Parle River.

A number of unnamed intermittent and perennial streams that are designated waters of the United States are also located within the Project Area. **Exhibit 14** shows the locations of surface waters and Minnesota PWI within the Project Area. All of the 100 year FEMA floodplains in the Project Area are within the creek basins and adjacent banks of Lazarus and Canby Creeks. **Exhibit 12** shows the locations of floodplains. The FEMA floodplain data is not available in a GIS format for Yellow Medicine and Lincoln counties but Firmettes of the Flood Zones (FEMA Panels 2705440075B, 2705440225B and 207653B) within the Project Area were reviewed at the FEMA website (http://www.fema.gov/).

8.14.2 Impacts

Construction of the wind turbines, transformer pads, associated facilities, collection lines, and access roads will temporarily disturb approximately 300 acres of land over the 35 square mile Project Area. Approximately 120 acres of land will be converted to turbines, associated facilities and roads when the Bitter Root Project is completed. Potential impacts to surface water resources from construction of access roads, turbine sites, collection lines, etc. could include erosion from increased surface water runoff, sedimentation, discharges of dewatering to groundwater, and diversion of watercourses.

During construction there is the possibility of sediment reaching surface waters when the ground is disturbed by excavation, grading, and construction traffic. The wind turbines will be built on higher elevations and ridges, which will avoid impacts to lakes and streams located in the lower areas of the Project Area. The Project will not alter any Public Waters or Watercourses. None of the Project components, turbines, electric feeder and collector lines, turbine access roads, or substation, will cross Public Waters.

8.14.3 Mitigation

The MnDNR Division of Waters requires a Public Waters Work Permit for any alteration of the course, current, or cross-section below the ordinary high water level of a Public Water or Watercourse. No such alterations are anticipated. Minnesota Statutes Section 84.415 requires a license from the MnDNR Division of Lands and Minerals for

the passage of any utility over, under, or across any state land or public waters. No crossings that require this permit are anticipated for the Project.

Minnesota Pollution Control Agency (MPCA) Response The MPCA provided response to the Applicant on August 21, 2008 (see **Appendix E**). The MPCA had no specific comments about the Project at this time, but provided a checklist of permits that may be required for the Project. The MPCA permit list included the NPDES construction stormwater permit and the Federal water quality certification permit (if wetlands are identified within the proposed Project Area.

The MPCA regulates construction activities that may impact storm water under the Clean Water Act. In the event that a National Pollutant Discharge Elimination System (NPDES) construction storm water permit and SWPPP is required for the Project, the Applicant will obtain the permit. An NPDES permit is required for owners or operators for any construction activity disturbing: 1) one acre or more of soil; 2) less than one acre of soil if that activity is part of a "larger common plan of development or sale" that is greater than one acre; or 3) less than one acre of soil, but the MPCA determines that the activity poses a risk to water resources.

To the greatest extent possible, the Applicant will design and site access roads to avoid or minimize impacts to surface waters and floodplains. If needed drain tile lines will be located in the field and the drainage functions provided by these lines will be perpetuated. Once a final site plan for access roads has been determined, potential impacts to surface waters and floodplains will be reviewed. Additional coordination with the Corps may be necessary, as further described in Section 8.15.

Disturbed surface soils will be stabilized at the completion of the construction process to minimize the potential for subsequent effects on surface water quality. The Applicant will minimize impacts to public waters and public water wetlands to the greatest extent possible. The Applicant will apply for required permits from appropriate agencies if the Project will impact public waters. An additional impervious and pervious surface of approximately 120 acres is expected for the Project. The turbine areas will be disconnected from one another and separated by vegetation which will reduce the impact of the small amount of increased storm water volume.

Access roads constructed adjacent to streams and drainageways will be designed and constructed to have a low-profile that will not impede natural drainage patterns. If construction occurs across drainage ways or drain tiles, it will be conducted in a manner to avoid adverse impacts. If necessary, culverts will be installed within access roads that are constructed in drainageways to allow cross drainage and prevent impoundment of water. Collection/transmission lines will be installed underground, which will not alter drainage patterns. Collection/transmission lines will be bored under county or township roads where such crossings are necessary. A SWPPP will be prepared and a construction NPDES permit will be obtained from the MPCA prior to the construction of the Project. The Applicant will obtain appropriate MnDNR permits if it determines that such permits are required.

8.15 Wetlands

8.15.1 Description of Resources

Wetlands and riparian areas are important resources because they provide habitat that is utilized by both resident and migratory wildlife. Wetlands also perform a variety of hydrologic (flood attenuation and groundwater recharge) and water quality (sediment attenuation and nutrient removal) functions.

It is anticipated that construction of the Project will avoid direct wetland impacts. Wetlands near the Project Area were identified by reviewing National Wetland Inventory (NWI) Maps and Minnesota PWI Maps. See **Exhibit 15a** and **Exhibit 15b** for locations of wetlands within the Project Area. Some of the wetlands are associated with creeks and unnamed intermittent streams within the Project Area and some of the wetlands are isolated basins. Many of the wetlands within the Project Area are drained through drain tiles and ditching. The NWI wetland types and their acreage for the Project Area are presented in **Table 8-5**.

Table 8-5: NWI Wetland Type and Acreage

Type	Cowardin Classification	Count	Acres[a]
1	Palustrine Emergent Temporarily Flooded (PEMA)	20	21.02
2	Palustrine Emergent Saturated (PEMB)	13	27.33
3	Palustrine Emergent Seasonally Flooded (PEMC)	269	669.17
4	Palustrine Emergent Semipermanently Flooded (PEMF)	47	26.42
5	Palustrine Unconsolidated Bottom Intermittently Exposed (PUBG)	10	138.28
6	Palustrine Scrub Shrub Broad-Leaved Deciduous Temporarily Flooded to Seasonally Flooded (PSS1A, PSS1C)	6	3.52
7	Palustrine Forested Broad-Leaved Deciduous Temporarily Flooded to Seasonally Flooded (PFO1A, PFO1C)	14	23.73
Total		379	909.47[b]

[a] Wetland acreage is calculated using USFWS NWI data There is a total of 379 NWI mapped wetlands in the Project Area, 20 Type 1 (PEMA) wetlands, 13 Type 2 (PEMB) wetlands, 269 Type 3 (PEMC) wetlands, 47 Type 4 Deep Marsh (PEMF) wetlands, 10 Type 5 Open Water (PUBG) wetlands, 6 Type 6 Shrub Swamp (PSS1A/C) wetlands and 14 Type 7 Wooded Swamp (PFO1A/C) wetlands.
b Note that total wetland acreage listed in this **Table 8-5** is different than the wetland acreage listed in **Table 8-6** because the data sources for each are different (e.g. **Table 8-5** is based upon NWI data and **Table 8-6** is based on information from the U of M Landcover Classification dataset. The methodologies

used to create these two datasets are very different. The NWI is created by reviewing numerous data sources including topography, soil types, and multiple years of imagery sometimes spanning 30 years or more. The areas noted as wetlands are based upon the technician's interpretation of the data. The U of M Landcover Classification dataset is created from satellite data. Satellites collect data on how much light is being reflected off of the earth's surface. The data is then run through a model developed by researchers which tells the program what values are associated with certain types of landcover. The landcover model classifies wetlands based on what type of vegetation is present (amount of light bouncing off). This is good for large scale classifications but not accurate at a granular level as many factors in addition to vegetation officially classify an area as being wetland. The NWI analysis utilizes more data in the creation of its dataset though ultimately it is subjective to the technician creating it, but desktop analysis is not field verified. Between the two datasets, the NWI data is likely more representative of the presence of wetlands.

8.15.2 Impacts

Wind turbines will be built on higher elevation and ridges and this will avoid wetlands on the lower positions in the landscape. Access roads will be designed to minimize impacts on the wetlands. Wetland impacts from the Project will be avoided and minimized to the greatest extent practicable. However, certain portions of the Project may require a wetland permit, letters of no jurisdiction, or exemptions from the United States Army Corp of Engineers (USACE), MnDNR Division of Waters, or Lincoln or Yellow Counties. After coordination and application, authorization from the USACE would likely fall under a Letter of Permission (LOP-05-MN) or the utility line discharge provision of a Regional General Permit (RGP-3-MN). The USACE could also require that the Project be authorized under Section 10 of the Rivers and Harbors Act, which requires a USACE permit to do work in, over or under Navigable Waters.

8.15.3 Mitigation

The Applicant will design the Project to avoid or minimize wetland impacts, and will apply erosion control measures identified in the MPCA Stormwater Best Management Practices Manual, such as using silt fence to minimize impacts to adjacent water resources. During construction, the Applicant will control operations to minimize and prevent material discharge to surface waters. If materials do enter streams, they will be promptly removed and properly disposed of to the extent feasible.

Minnesota Board of Water & Soil Resources (BWSR) Response The Minnesota BWSR provided response to the Project on August 6, 2008 (see **Appendix E**). BWSR recommended that the Applicant carefully plan and site the Project and its infrastructure to avoid wetland impacts pursuant to the Minnesota Wetland Conservation Act (WCA). BWSR also recommended that the Applicant complete a Minnesota Local/State/Federal Application form for Water/Wetland Projects if there are surface waters or wetlands on the site, and that appropriate erosion and sediment control measures and BMPs be taken for the Project.

Lincoln Soil and Water Conservation District (SWCD) Response The Lincoln SWCD provided response to the Project on July 30, 2008 (see **Appendix E**). Lincoln SWCD is the wetlands administrator for Lincoln County and it requested additional project details, including location of roads, road approaches, transmission lines,

substations and towers, and any other temporary or permanent structure planned for the Project. Lincoln SWCD indicated that if there are wetland impacts, it will work with the Applicant concerning required applications and submittals for a permit.

During construction there is the possibility of sediment reaching wetlands as the ground is disturbed by excavation, grading, and construction traffic. Disturbed surface soils will be stabilized at the completion of the construction process to minimize the potential for subsequent effects on surface water quality. The Applicant will minimize impacts to public waters and public water wetlands to the greatest extent possible. If wetland impacts cannot be avoided, the Applicant will submit Section 404 and Minnesota Wetland Conservation Act (WCA) permit applications to the USACE and the Local Units of Government (LGUs) responsible for administration of the Minnesota WCA. The Lincoln County Soil and Water Conservation District (SWCD) is the listed LGU for Lincoln County and the Yellow Medicine SWCD is the LGU for Yellow Medicine County.

8.16 Vegetation

8.16.1 Description of Resources

A majority of the land within the Project Area consists of cultivated, agricultural croplands (see **Table 8-6** and **Exhibit 10**). The natural vegetation map of Minnesota identifies the areas of Yellow Medicine and Lincoln Counties as being historically comprised of upland prairie and prairie wetland (University of Minnesota, Remote Sensing and Geospatial Analysis Laboratory. *Minnesota 2000 Level I Landsat Landcover Classification; Coffin and Pfannmuller,* 1988). The upland prairie vegetation includes bluestems, Indian grass, needle grass, grama grasses, composites, and other forbs. Prairie wetland vegetation includes blue-joint grass, cord grass, cattails, rushes, and sedges. Tallgrass prairie developed with periodic fires that were either started by natural causes (i.e., lightning) or by Native Americans.

Table 8-6: Land Use and Relative Abundance in Project Area

Land Use	Acres	Percent of Project Area
Cultivated Land	9,871	44%
Grasslands [a]	8,076	36%
Wooded	449	2%
Water [b]	449	2%
Wetland [b]	1,795[d]	8%
Shrubland	224	1%

Table 8-6: Land Use and Relative Abundance in Project Area		
Land Use	**Acres**	**Percent of Project Area**
Urban/Developed [c]	1,570	7%
Total	22,434	100%

[a] Native prairie area will be determined by a field survey prior to construction.
[b] Wetland area will be determined by a wetland delineation prior to construction.
[c] Urban/Developed lands includes homesteads and roads.
d See footnote b in **Table 8-5**.

As a result of settlement in the mid-1800s, a great majority of the area was converted into farmland. During this process, the wetland areas were frequently ditched and drained. Trees were planted by landowners for shelter belts (windrows and homestead groves) or were established by natural means such as transportation to the area by animals, birds or winds (wooded ravines). Today, managed native prairie areas are located within the Project Area in four State of Minnesota WMAs and two federal WPAs (see Section 8.6). There also are a few small tracts of native prairie located on private lands in the Project Area; potential impacts and mitigation for these areas are discussed in detail below in Section 8.18.

Review of aerial photographs, land use database information, and Project Area site visits confirm that a majority of the land area within the Project Area is cultivated. Crops include corn, soybeans, alfalfa, clover, wheat, oats, and hay. Range and pasture lands are used to graze cattle, sheep, and horses. Heavily grazed range/pasture lands contain Kentucky bluegrass, quack grass, and brome grasses. Lightly grazed or undisturbed range land may contain native grass species including big blue stem, needle grass, and grama grass. CRP land is typically covered by brome grasses, orchard grass, and alfalfa. Land is typically put into CRP for 10-year cycles. Additional information on agriculture and farming can be found in Section 8.9.

The grassland and wetland areas may contain potential remnant native prairie areas.[10] Unplowed fields of native grassland or pasture, with 10 or more prairie plant indicator species, are considered to be prairie for the purposes of this Application.[11]

Approximately 449 acres of the Project Area is wooded, according to US Geological Survey (USGS) GAP land cover data. Generally, the wooded areas are isolated groves or windrows established by the landowner/farmers to prevent wind erosion and shelter dwellings. Typical tree species include bur oak, cottonwood, American elm, silver

[10] Native prairie is identified as lands that have never been plowed, with less than 10 percent tree cover, and presence of native prairie vegetation.
[11] A list of prairie indicator species can be found in Appendix 3 and Supplement to Appendix 3 in Minnesota's Native Vegetation: A Key to Natural Communities, Minnesota Department of Natural Resources Natural Heritage Program, 1993.

maple, poplar, and willow. The relative abundance of the major habitats in the Project Area is shown in **Table 8-6**.

8.16.2 Impacts

Approximately 120 acres of land within the Project Area will be used for turbines, associated facilities and access roads. The amount of vegetation that will be removed as a result of the Project will be updated once a final site layout is determined. The vegetation that will be disturbed will mainly be agricultural and rangeland. Vegetation in such areas is frequently disturbed by farming practices. Turbines and access roads will be located in wetlands or wooded areas to the least extent practicable. Operation and maintenance of the Project is not expected to impact vegetation in the area.

During construction, approximately 300 acres of land will be temporarily impacted for material and equipment staging and lay down areas. Additional areas may also be disturbed for underground power lines during construction. Avoidance and minimization of impacts to wetlands and native prairies will reduce impacts to those vegetated areas.

8.16.3 Mitigation

To avoid or minimize potential impacts to vegetation within the Project Area during siting, construction, and operation, the Applicant will:

- Identify existing WMAs, WPAs, recreation areas, wetlands, native prairie, and forests prior to construction. The preconstruction inventories described in Section 8.19 will provide more details for areas in the vicinity of construction;
- Avoid established wildlife management, recreation and significant natural areas for siting wind turbines, associated facilities, access roads, or electrical lines;
- Avoid disturbing wetlands during construction and operation of the Project to the greatest extent practicable (if jurisdictional wetland impacts are identified, the Applicant will apply for required wetland permits);
- Obtain a MPCA construction NPDES stormwater permit and use appropriate BMPs during construction and operation of the Project to protect topsoil and adjacent natural resources and to minimize soil erosion. BMPs may include containing excavated material, protecting exposed soil and stabilizing restored material, revegetating non-cropland and range areas with wildlife conservation species and, wherever feasible, planting native tall grass prairie species in cooperation with landowners;
- Reseed temporarily disturbed areas to blend in with existing vegetation; and
- Prepare a prairie protection and management plan (PPM Plan) in conjunction with the MnDNR, if native prairie impacts are expected. The PPM Plan will address steps to identify native prairie within the Project Area, measures to avoid impacts to native prairie, and measures to minimize and mitigate for impacts, if unavoidable. Wind turbines and associated facilities shall not be placed in native prairie unless included in the PPM Plan. Measures to be taken to mitigate unavoidable impacts to

native prairie will be agreed to by the Applicant and MnDNR. The PPM Plan will be submitted to the MPUC and MnDNR prior to construction.

8.17 Wildlife

8.17.1 Description of Resources

This section discusses the occurrence of wildlife within the Project Area, based on existing information from a variety of sources, including MnDNR, USFWS, Minnesota Ornithologist's Union, as well as onsite information collected by Western EcoSystems Technology, Inc. (WEST) from March through October 2008. Section 8.18 discusses wildlife in the Project Area that is considered to be threatened or endangered or of special concern.

Wildlife species found within the Project Area are typical of those found in highly disturbed agricultural areas of the midwest. Wildlife includes both resident and migratory species of Minnesota game and non-game wildlife that are associated with roadside, ditches, fencerows, wetlands and areas of non-maintained grasses and shrubs (e.g. birds, mammals, fish, reptiles, amphibians, and insects which use the habitat for forage, breeding and/or shelter). Species present in the general vicinity of the Project Area are those associated with croplands, grasslands, wetlands, and riparian woodlands.

Common mammals are those common to most of southern Minnesota and include house and deer mice, squirrel, six species of bats (although the federally endangered Indiana bat is typically not found within this region), least and long-tailed weasels, and prairie and meadow voles. Other, larger mammals include white-tailed deer, cottontail rabbits, white-tailed jackrabbits, fox, and skunk.

The majority of the migratory wildlife species are birds including waterfowl, raptors, shorebirds, and songbirds. The scope of the wildlife studies conducted by WEST to evaluate the spatial and temporal use of the Project Area by these species included fixed-point bird use surveys, breeding bird transect surveys, a raptor nest survey, acoustic bat surveys, a prairie grouse lek survey, and incidental wildlife observations. While summarized here, details of these surveys may be found in **Appendix F**.

The objective of the 2008 fixed-point bird use surveys was to estimate the use of the study area by birds, particularly waterfowl and raptors. Approximately 150 twenty-minute surveys were conducted within the Project Area, recording a total of 14,656 individual birds within 675 separate groups. Sixty-eight unique species were observed, with a mean number of species observed per survey of 3.40. Three species accounted for approximately 89% of the observations: snow goose, red-winged blackbird, and Canada goose. Passerines were the most abundant bird type in the summer and fall and waterfowl were the most abundant bird type in the spring. The highest overall bird use occurred in the spring.

Using methodology similar to other studies, pre-construction raptor use at the Project Area was compared to that observed at as many other places as possible across the

country. A total of 37 individual raptors were recorded during the fixed point surveys, representing five individual species. Annual mean raptor use within the Project Area was compared with other wind-energy facilities that implemented similar protocols and had data for three or four seasons. Based on the results from these 36 other wind energy facilities, mean raptor use within the Project Area is considered to be low.

The objective of the 2008 transect surveys was to identify bird use and distribution within the study area – particularly in regard to grassland nesting birds. Forty-one unique species were identified during the surveys and the mean number of species observed per transect per survey period was 5.85. A total of 758 individual bird observations within 417 separate groups were recorded. Cumulatively, three species (7% of all species) accounted for 55% of the individual observations. These were mallard, bobolink, and red-winged blackbird. No other species accounted for more than 6% of the observations.

Raptor nest surveys were conducted to locate and record both active and previously-used raptor nest locations. Surveys focused on locating large, stick nest structures. Surveys were completed by walking and driving along public roads and accessible private roads while looking for raptor nest structures within areas of suitable habitat. No raptor nests were observed within the Project Area.

Incidental observations recorded by WEST biologists traveling around the site included seven species of raptors. Only the rough-legged hawk was not also observed during fixed-point or transect surveys.

Prairie grouse lek surveys were conducted to determine whether grouse were breeding within or nearby the Project Area. Lek surveys were conducted twice during spring 2008, during the period of peak breeding activity. No prairie grouse leks were observed.

Acoustical surveys, using Anabat II detectors, were conducted to estimate the seasonal and spatial use of the Project Area by bats from mid-July through September 2008. Bat activity was monitored at three sampling locations on a total of 71 nights. Anabat units recorded 5,302 bat passes on 142 detector-nights, resulting in a mean of 37.9 bat passes per detector-night. Bat activity peaked during the period from July 30 through August 18. Overall, passes by low-frequency bats outnumbered passes by mid- and high-frequency bats. The proportion of high-, mid-, and low-frequency bat passes was similar among all AnaBat locations. Hoary bats accounted for 16.6% of total passes detected and they were detected at every location on all 71 days of AnaBat operation.

Reptile and amphibian species that may be present in the Project Area include the western plains garter snake, red-sided garter snake, western hognose snake, snapping turtle, western painted turtle, American toad, northern leopard frog, and western chorus frog.

8.17.2 Impacts

Wildlife that is present within Project Area is already accustomed to the annual activities associated with large scale agricultural production. Construction and operation of the Bitter Root Project will only minimally alter the existing land use. Wildlife that resides within construction zones of the Project will be temporarily displaced to adjacent habitats during the construction process. Although most effects on wildlife will be short-term, development of the permanent Project footprint (i.e., turbine foundations, access roads, O&M facility, and Project Substation) will cause a small reduction in the available habitat of the wildlife uses for forage and cover and have a minimal long-term effect on habitat areas that consists primarily of cultivated agricultural crops.

The wind turbines, meteorological towers and above ground collection/transmission lines may affect raptors, waterfowl and other bird and bat species. Birds have the potential to collide with all elevated structures, including wind turbines, meteorological towers and power lines. Avian collisions with turbines, meteorological towers and collection/transmission lines can occur in proximity to agricultural fields that serve as feeding areas, wetlands and water features, and along riparian corridors that may be used during migration.

Electrocution is commonly a concern with electrical facilities. The electrocution of large birds, such as raptors, is more commonly associated with small distribution lines than transmission lines. Electrocution occurs when birds with large wingspans come in contact with two conductors or a conductor and a grounding device.

Studies of existing wind power projects in the United States and Europe have found that impacts to wildlife will primarily occur to avian and bat populations. The final report on avian monitoring studies at Buffalo Ridge Wind Resource Area (Buffalo Ridge WRA) located in southwestern Minnesota (WEST, 2000), which is southeast of the Project Area, identified the following impacts:

- After construction of the wind turbines, project area use by grassland breeding birds within 100 meters of the turbines was reduced by about 32 percent. The report suggested that lower avian use may be associated with avoidance of turbine noise, maintenance activities, and a reduction in preferred habitat. WEST stated that “on a large scale basis, reduced use by birds associated with wind power development appears to be relatively minor and would not likely have any population consequences on a regional level.”
- Avian mortality appears to be low in the vicinity of Buffalo Ridge WRA compared to other wind facilities in the United States (WEST, 2001 and 2002). WEST found an overall avian mortality of 0.98 birds per turbine per year. Avian mortality is primarily related to nocturnal migrants. Resident bird mortality is very low and involves common species. WEST stated that “based on the estimated number of birds that migrate through Buffalo Ridge each year, the number of wind plant related avian fatalities at Buffalo Ridge is likely inconsequential from a population standpoint.”

- WEST also studied bat mortality at the Buffalo Ridge WRA in 2001 and 2002. WEST found an overall mortality average of 2.16 bats per turbine per year. Approximately 82 percent of the bat mortality occurred from mid-July through the end of August. WEST found that "both the bat detector and mist net data indicate there are relatively large breeding populations of bats in close proximity to the wind plant that experienced little to no wind plant related collision mortality." As with other wind power projects across the country, it appears that most bat mortality at Buffalo Ridge involves migrating bats. Researchers highlighted that bat mortality increased with reduced distance between turbines and wetlands or woodlands. Turbines in this study were 750 KW turbines with 50 m towers and rotor diameters of 46 m or 48 m. Both towers and rotor blades will be larger at the Bitter Root Project and rotor blades will turn much more slowly.

Data collected by WEST in 2008 allow an estimation of specific impacts to avian and bat species that may use the Bitter Root Project Area. In regard to raptors, a regression analysis of raptor use and mortality for 13 new-generation wind-energy facilities, where similar methods were used to estimate raptor use and mortality, found that there was a significant correlation between use and mortality. Using this regression to predict raptor collision mortality at Bitter Root, based on a mean raptor use of 0.259 birds/20- min survey, yields an estimated fatality rate of no raptors/MW/year for each 100-MW of wind-energy development. A 90% prediction interval around this estimate is zero to 0.24 raptors/MW/year. The fact that no raptor nests were found within the Project Area, suggests that the likelihood of displacing significant numbers of breeding raptors is similarly low.

In regard to potential impacts to non-raptor bird species, passerines (primarily perching birds) have been the most abundant bird fatality at wind energy facilities outside California, often comprising more than 80% of the bird fatalities. Both migrant and resident passerine fatalities have been observed. Given that passerines made up a large proportion of the birds observed in the summer and fall, the Applicant would expect passerines to make up a relatively large proportion of fatalities at the Bitter Root Project Area.

In the spring, substantial concentrations of waterfowl (mainly snow geese) were observed within the Project Area. Although wind-energy facilities with year-round use by water dependent species have shown the highest mortality, the levels of waterfowl/waterbird/shorebird mortality appear insignificant compared to the use of the sites by these groups. Of 1,033 avian carcasses collected at U.S. wind-energy facilities, waterbirds accounted for 2%, waterfowl for 3%, and shorebirds for <1% (Erickson et al. 2002). At the Klondike, Oregon wind-energy facilities, only two Canada goose fatalities were documented (Johnson et al. 2003) even though 43 flocks totaling 4,845 individual Canada geese were observed during pre-construction surveys (Johnson et al. 2002).

The recently constructed Top of Iowa Wind Project is located in cropland between three Wildlife Management Areas (WMAs) with historically high bird use, including migrant and resident waterfowl. During a recent study, approximately one million goose-use days and 120,000 duck-use days were recorded in the WMAs during the fall and early

winter, and no waterfowl fatalities were documented during concurrent and standardized wind project fatality studies (Koford et al. 2005).

Similar findings were observed at the Buffalo Ridge wind resource area in southwestern Minnesota, which is located just south of Bitter Root, in an area with relatively high waterfowl/waterbird use and some shorebird use. Snow geese, Canada geese and mallards were the most common waterfowl observed. Three of the 55 fatalities observed during the fatality monitoring studies were waterfowl, including two mallards and one blue-winged teal (*Anas discors*). Two American coots, one grebe, and one shorebird fatality were also found (Johnson et al. 2002). Based on available evidence, waterfowl do not seem especially vulnerable to turbine collisions and low mortality impacts would be expected at the Bitter Root Project Area.

Recent studies examining the potential for wind power projects to displace grassland nesting passerines (e.g., Erickson et al. 2004, Young et al. 2005), suggest a relatively small potential for impacts to these birds. Transect surveys conducted prior to and after construction of the wind-energy facilities found that grassland passerine use was significantly reduced within approximately 164 ft (50 m) of turbine strings, but areas further away from turbine strings did not have reduced bird use. Displacement of grassland passerines may be reduced by siting turbines away from grassland or natural habitats. Turbines sited within agricultural land, similar to the surrounding area, should minimize displacement impacts.

Regarding the potential for displacement of waterfowl and other waterbirds, along the Buffalo Ridge in Minnesota, the abundance of several bird types, including shorebirds and waterfowl, were found to be significantly lower at survey plots with turbines than at reference plots without turbines (WEST 2000). The report concluded that the area of reduced use was limited primarily to those areas within 328 ft (100 m) of the turbines. Disturbance tends to be greatest for migrating birds while feeding and resting (Crockford 1992[12]; NWC 2007). The majority of waterfowl use at the Bitter Root Project Area included migrating snow geese and the majority of waterbird use was accounted for by the American white pelican. Migrating snow geese require water areas and feeding areas, which in the Midwest usually consist of agricultural fields. The presence of similar habitat surrounding the Bitter Root Project Area means that any displacement of snow geese is unlikely to impact the population. The American white pelican is primarily a water bird that nests on islands or cut-off peninsulas. Siting turbines and construction away from these types of habitat will decrease any impact local populations.

Bat activity within the Bitter Root Project Area (mean = 37.94 bat passes per detector-night) was high compared to that observed at facilities throughout the U.S. Based on the presumed relationship between pre-construction bat activity and post-construction fatalities, the Applicant expects bat mortality rates at Bitter Root Project Area to be similar to or greater than the 10.2 bat fatalities/turbine/year reported at Top of Iowa,

[12] Crockford, N.J. 1992. A Review of the Possible Impacts of Wind Farms on Birds and Other Wildlife. JNCC Report No. 27. Joint Nature Conservancy Committee. Peterborough, UK. 60 pp.

Iowa, but lower than the 38 fatalities/turbine/year reported at Mountaineer, West Virginia.

In summary, potential impacts to wildlife during construction and operation of the Project may include mortality, direct loss of habitat from the Project footprint, and indirect loss of habitat by Project avoidance. Based on the location of the proposed Project Area, including the terrain and types of habitat present, avian and bat mortality are expected to be within the range of collision mortalities seen at existing wind energy facilities within the region. Importantly, operation of the wind farm will not change the predominant existing land use, agriculture, or the availability of habitats associated with this land use.

8.17.3 Mitigative Measures

The Applicant anticipates that most wildlife displacement and habitat impacts will be temporary. However, the Application will address avian issues related to the Project by working with resource agencies such as the MnDNR and the USFWS to avoid siting turbines in sensitive habitats and in areas known to be migration corridors or migratory resting areas. The Applicant is assessing the Project Area for areas with potential avian issues and will coordinate possible mitigation efforts with applicable regulatory agencies once the assessment has been completed.

To the extent practicable, the Applicant will consider the following mitigative measures to help avoid potential impacts to wildlife in the Project Area during selection of the turbine locations and subsequent Project development and operation:

- Conduct a pre-construction inventory of existing biological resources, native prairie, and wetlands in the Project Area;
- Conduct additional bat acoustical surveys to better evaluate the activity and distribution of bats within the Project Area;
- Exclude established WMAs, SNAs, and recreation areas from the siting of wind turbines and associated facilities;
- Site wind turbines away from rare or restricted habitats and areas known to host large concentrations of birds;
- Avoid or minimize disturbance of individual wetlands or drainage systems during construction of the Project;
- Locate turbines to avoid low areas and wooded areas
- Avoid or minimize impacts from the collection/transmission lines to wildlife by burying as many of the lines as possible. Additionally, the collection/transmission line design standards the Applicant will employ for above ground lines should provide adequate spacing to eliminate the risk of raptor electrocution and minimize avian impacts of the proposed Project;
- Minimize the amount of infrastructure;

- Avoid or minimize placement of turbines in high quality native prairie tracts and wooded areas;
- Protect existing trees and shrubs that are important to the wildlife present in the area;
- Maintain sound water and soil conservation practices during construction and operation of the Project to protect topsoil and adjacent resources and to minimize soil erosion. To minimize erosion during and after construction, BMPs for erosion and sediment control will be utilized. These practices include temporary seeding, permanent seeding, mulching, filter strips, erosion blankets, grassed waterways, and sod stabilization;
- Construct wind turbines using tubular monopole towers to minimize perching;
- Install electrical collection lines and transmission line underground as much as possible;
- Minimally light turbines according to FAA requirements;
- Revegetate non-cropland and pasture areas disturbed during construction or operation with an appropriate native seeding mix; and
- Inspect and control noxious weeds in areas disturbed by the construction and operation of the Project.

8.18 Rare and Unique Natural Resources

8.18.1 Description of Resources

The Applicant contacted both the USFWS and the MnDNR to review the Project for threatened and endangered (T&E) species and unique habitats (see **Appendix E**). In addition, all sensitive species observed during WEST's 2008 wildlife surveys were compiled.

USFWS Responses The Applicant requested comments on the Project from the USFWS on January 31, 2008, and July 29, 2008 (see **Appendix E**). In addition, the Applicant conferred extensively via phone and email with both the USFWS and MnDNR prior to finalizing a 2008 field work protocol. In a July 8, 2008 response letter, the USFWS identified two concerns with the Project: 1) Potential conflicts with grassland birds found in the area on high quality grasslands; and 2) USFWS wetland and grassland easements and MN DNR Wildlife Management Areas within the Project Area (see **Appendix E**).

In accordance with all USFWS and MnDNR feedback, the Applicant engaged WEST, Inc. to perform bird and bat monitoring surveys and to prepare a report, which is included in **Appendix F**.

On July 31, 2008, the USFWS provided additional response and requested additional details regarding the proposed turbine locations, associated infrastructure and a report of natural resources fieldwork, if available. The USFWS indicated it would have

additional comments on the Project once additional details are provided and it suggested a meeting between USFWS and MnDNR staff with the Applicant to discuss potential impacts.

MnDNR Responses The Applicant submitted a request for a Minnesota Natural Heritage Information System (NHIS) to the MnDNR on January 31, 2008 and, as noted above, was also consulted extensively in regard to plans for 2008 field study protocol (see **Appendix E**). On June 12, 2008, the MnDNR responded to a request for a NHIS data request regarding rare species and natural communities in the Project Area. The results of the MnDNR search are included in **Appendix E**, and summarized below.

The MnDNR Natural Heritage Database lists five species tracked that have been mapped in the area: Arcadian Flycatcher (Species of Special Concern), Short-eared Owl (Species of Special Concern), American Bittern (Not Listed, but tracked), Upland Sandpiper (Not Listed, but tracked) and the Marbled Godwit (Species of Special Concern). All of these five species are either wetland nesting or upland prairie nesting and are unlikely to be disturbed by turbine placement which will primarily be in areas currently used for agriculture.

The MnDNR Natural Heritage Database has one record of a Richardson's ground squirrel recorded within the Project Area. This species has no designated legal protection status, but is tracked by the MnDNR. These species use the food and cover available from agricultural fields, grasslands, farm woodlots, wetland areas, and wooded ravines.

The MnDNR has records of five species (all butterflies) of concern within the Project Area including: Regal Fritillary (State Species of Special Concern), Arogos Skipper (State Species of Special Concern), Dakota Skipper (State Threatened), Pawnee Skipper (No Ranking) and the Powesheik Skipper (State Species of Special Concern). All of these five species are found primarily in upland prairie and are unlikely to be disturbed by turbine placement which will primarily be in areas currently cropped.

The MnDNR Natural Heritage Database has no records of any reptiles or amphibians of special concern within the Project Area.

The following assessment is based on the MnDNR results, a review of the NHIS data provided by the MnDNR, and other state and federal rare species and natural community information.

NHIS data shows that there are 70 recorded occurrences of special status species, plant communities or other unique natural features within a one–mile radius of the Project Area (see **Exhibit 16**). Occurrences include five species of butterflies, five species of birds, one species of mammal, nine species of plants and four types of sensitive natural areas, including 13 areas of Dry Hill Prairies, six areas of Calcareous Fens, one area of Mesic Prairie and one area of Wet Prairie. In addition, field review of the area by the Applicant located one potential additional Calcareous Fen within the Project Area. The Project and construction process will be designed to avoid and

minimize effects on these species, plant communities and unique natural features to the extent practicable.

In response to the Applicant's July 29, 2008 request for comment on the Project, the MnDNR provided a supplemental response dated September 16, 2008 (see **Appendix E**). The MnDNR indicated that its June 12, 2008 response is still valid and the MnDNR reiterated that the Project Area contains calcareous fens, WMAs, and USFWS WPAs. The MnDNR encouraged the Applicant to prepare "constraint maps" to show areas that will be avoided for the Project.

In addition to the MnDNR NHIS data search, the Applicant requested comments from the MnDNR Ecological Resources Division (see **Appendix E**). On July 29, 2008, the regional MnDNR Environmental Review Ecologist commented that the Applicant should assess the Project as follows:

- Request a NHIS data search from the MnDNR (see above);
- Identify county, state and federal lands within the Project Area to identify wildlife habitat and assess possible impacts from the Project (see Sections 8.15 to 8.18);
- Identify pastureland and native prairie within the Project Area and assess possible impacts from the Project (see Sections 8.9, 8.16);
- Identify lakes, wetlands, streams and rivers within the Project Area and assess possible impacts from the Project (see Sections 8.13 to 8.15);
- Develop and apply BMPs during construction concerning disturbance to soils, surface water and associated ground cover (see Sections 8.12 to 8.16); and
- Consider migratory corridors and scenic views in the siting and design of the Project (see Section 4.18 and above); and identify cultural and historical resources within the Project Area (see Section 8.5).

On May 5, 2008, the MnDNR Ecological Resources Department commented to the Yellow Medicine County Board of Adjustments/Zoning and Agricultural Office on a variance request of the Applicant to construct two meteorological towers in Fortier Township (see **Appendix E**). The MnDNR stated that the MnDNR manages five WMAs and the USFWS manages two WPAs within Fortier Township, which are managed for grassland and migratory bird species in this area. Additionally, the MnDNR indicated it is interested in protecting remnant prairies and calcareous fens in this township, that any digging or excavation for the towers and any future turbines requires extensive precautions, and that the Applicant should contact and receive approval by the Wetland Programs Coordinator, which will determine setbacks and other restrictions that may be needed to protect the fens.

The MnDNR indicated that the Project Area is a significant migratory route for many species of birds and that the conditional use variance should include a provision requiring a reporting protocol for bird and bat mortality related to the towers and that all incidents be effectively and promptly reported to the MnDNR and the USFWS for further actions as needed. The MnDNR also recommended that: 1) the meteorological tower

be constructed less than 200 feet in height without guy wires and without lights; 2) if the meteorological tower is over 200 feet, only low density white strobe lights be used at night and with a minimum number, intensity and flash-per-second as allowed by the FAA. If guy wires are used, bird flight diverters and red aircraft balls should be installed on the guy wires and security lights should be down-shielded; and 3) Minnesota Rules Chapter 7836 for native prairie protection is followed for constructing any monitoring towers on native prairie tracts (including preparing a native prairie plan).

WEST 2008 Wildlife Surveys: All sensitive species observed within the Project Area are summarized in **Table 5** of **Appendix F**. Of the two species that were designated "special concern" by the Minnesota Department of Natural Resources, the American white pelican was the species that was observed during fixed-point surveys, transect surveys, and incidentally. The loggerhead shrike was only observed during fixed-point surveys. All other species listed in Table 5 were considered "species in greatest conservation need" by Bird Conservation Minnesota. No federal threatened, endangered, proposed, or candidate species were observed in or near the Bitter Root Project Area.

8.18.2 Impacts

Possible impacts to rare and unique resources include temporary disruption of habitat during construction, disturbance of surface features during construction of access roads, turbine areas, O&M facility, project substation and collection lines, and erosion and increased stormwater runoff. During operation of the Project, an increase in bird strikes is possible due to the presence of the wind turbines. No significant impacts are anticipated to rare and unique resources. A field review and mapping of sensitive areas of the Project Area for this permit combined with the MnDNR mapping will be used in the preliminary siting of turbines, and associated facilities. Also, a more detailed pre-construction inventory of existing native prairie, woodlands, and wetlands will be conducted in the Project Area. This will allow the Applicant to avoid the identified resources to the extent practicable.

All of the recorded significant plant and animal species recorded within the Project Area are found in association with either the Calcareous Fens or the Dry Hill Prairie areas. No impacts to Calcareous Fens are expected from this project. All known fens within the Project Area have been mapped and will be avoided during both construction and operation of the Project. Dry Hill Prairie areas will also be avoided to the extent possible.

8.18.3 Mitigation

The Project and construction process will be designed to avoid encroachment and effects on rare and unique resources to the extent practicable. If such resources will be affected, the Applicant will coordinate with the USFWS, MnDNR or other applicable regulatory agency and consider modifying either the construction footprint or the construction practices to minimize impacts. Sediment and erosion control practices will

minimize the area affected during construction. Erosion control measures will also minimize potential impacts to surface water quality.

To avoid potential Project impacts to rare and unique resources, the Applicant will conduct the following:

- a pre-construction inventory of existing biological resources, native prairie, calcareous fens and wetlands in the Project Area;
- a more detailed desktop and field review of wetlands, fens and drainage systems within the Project Area;
- studies to identify and avoid disturbance of individual wetlands, fens or drainage systems during construction of the Project; and
- studies to identify and avoid placement of turbines in high quality native prairie.

8.19 Summary of Preconstruction Inventories

The Applicant will conduct the following resource inventories for the Project Area prior to construction. The Applicant will submit copies of these preconstruction inventories to the MPUC at the preconstruction meeting:

- Inventory of biological resources (desktop and field identifications of existing WMAs, SNAs, USFWS lands, recreation areas, native prairies, forests, and other biologically sensitive areas within the Project Area;
- Avian surveys during breeding and spring/fall migration seasons;
- Prairie chicken lek surveys;
- Acoustical bat surveys;
- Wetland avoidance surveys and, as required, formal delineation in accordance with Section 404 Permit requirements;
- Phase I Environmental Site Assessment; and
- Phase I Archeological Survey.

9.0 CONSTRUCTION OF THE PROJECT

9.1 Construction

The general contractor, overseen by the Applicant's construction department, will start with building and improving roads before moving on to the collection system, substation, switchyard, and O&M building. The Applicant's manufacturing division, ACCIONA Windpower, is tasked with erection, commissioning, and testing the turbines.

The Applicant's site management will be on the construction site every day to ensure the highest safety and quality standards are achieved and the Applicant works in

partnership with suppliers and contractors to maintain a highly productive and motivated construction team.

The Applicant will ensure that all workers at the site know and follow all applicable environmental, health and safety procedures. Every effort will be made to reduce the risk of environmental accidents.

Quality of material, supply and processes are ensured by the Applicant's construction management team. On-site personnel implement a quality assurance and control system. This system focuses on prevention of non-conformance with regard to project work. This system is integrated with pre-planning efforts inherent with the Applicant's Zero-Injury safety project. This pre-planning and attention to detail prior to the installation of the work plays a significant role in eliminating errors, rework and poor quality installation. Frequent inspections of vendors' facilities are performed by the Applicant's professionals. Material specification has been developed cooperatively between the Applicant's engineers and vendors. Construction managers observe first article procedures and inspect first article goods to ensure a high quality, repeatable process.

The Applicant's business model includes manufacturing, developing, owning, and operating renewable energy projects. One of the Applicant's major market strengths is its ability to supply its own turbines. The Applicant builds several wind farms per year and allocates turbines as needed from its manufacturing division as projects near construction. Other long lead time items are ordered beginning approximately one year prior to construction or as market conditions allow.

Several activities must be completed prior to the proposed commercial production date. The majority of the activities relate to equipment ordering lead-time, as well as design and construction of the facility. Below is a preliminary schedule of activities necessary to develop the Project. Pre-construction, construction, and post-construction activities for the Project include:

- Ordering of all necessary components including towers, nacelles, blades, foundations, transformers, etc;
- Finalizing turbine micro-siting;
- Completing surveys to establish locations of structures and roadways;
- Conducting soil borings, testing and analysis for proper foundation design and materials;
- Completing construction of access roads, to be used for construction and maintenance;
- Designing and constructing the Project Substation and Interconnection Facility;
- Installing tower foundations;
- Installing the Collection System;

- Erecting and commissioning wind turbines;
- Acceptance testing of facility; and
- Commencing commercial production.

The Applicant and its engineering and construction contractors will perform all engineering, procurement, and construction of the wind farm. Under the oversight of the Applicant's engineering and construction management staff, the engineering and construction contractors will:

- Provide civil engineering for roads and turbine foundations;
- Construct foundations, towers, and transformers;
- Assemble and install wind turbines; and
- Install the communication system, including supervisory control and data acquisition hardware, telephone and fiber-optic cable, and construct the collection system.

The construction team will be on site to handle materials purchasing, construction, and quality control. The primary contractors will select and manage their local subcontractors to complete all aspects of construction. Throughout the construction phase, ongoing coordination occurs between the Project development and the construction teams. The Applicant on-site manager helps to coordinate all aspects of the Project, including ongoing communication with local officials, citizens groups and landowners. Even before the Project becomes fully operational, the O&M staff is integrated into the construction phase of the Project. The construction manager and the O&M staff manager work together continuously to ensure a smooth transition from construction through wind farm commissioning and, finally, operations.

Temporarily disturbed areas during construction of the Project include crane pads at each turbine site, temporary travel roads for the cranes, temporary laydown areas around each turbine, trenching in the underground electrical collection system, and storage/stockpile area. In addition to the disturbances associated with the temporary travel roads for the cranes, it is possible that temporary impacts could occur when cranes move cross country between strings of turbines.

During the construction phase, several types of light, medium, and heavy-duty construction vehicles will travel to and from the site, as well as private vehicles used by the construction personnel. The peak volume will occur during the time when the majority of the foundation and tower assembly is taking place. At the completion of each construction phase this equipment will be removed from the site or reduced in number. Prior to construction, the Applicant will coordinate with local jurisdictions (county and township) to obtain the necessary road access and overwidth/overweight permits.

The Project will be commissioned after completion of the construction phase. The Project will undergo detailed inspection and testing procedures. Inspection and testing occurs for each component of the wind turbines, as well as the communication system,

meteorological system, high-voltage collection and feeder system, and the SCADA system. Once the interconnection is established, the Applicant will commission each turbine to generate electricity.

10.0 OPERATION OF THE PROJECT

ACCIONA Energía is one of the largest operators of wind farms in the world and it operates one of the highest availability fleets of wind turbines in the world. The Applicant will augment its O&M staff as needed with appropriate contractors to service and maintain the Project. The Applicant will use the ACCIONA Wind Energy team, which utilizes the experience, expertise, and processes of the parent company to ensure the highest levels of safety and professionalism in Operations and Maintenance at the Bitter Root Project. **Table 10-1** provides a summary of the O&M Plan that the Applicant will use for the Project.

Table 10-1: Operations and Maintenance Plan

Category	Staff Resources	Proposed Service and Maintenance
Project Staffing	Management	One ACCIONA Wind Energy facility manager and two lead technicians
	Field Personnel	Approximately one on-site service technician for every 10 to 15 Wind Turbines.
Manufacturer Support and Warranty Operations	Spares and Replacements Supplies	Manufacturer will provide customary replacement support during the warranty period
	Warranty Provisions	Manufacturer will provide full warranty repair and replacement services for a period of two years
	Technical Support	Manufacturer technical advisors will be available on an as-needed basis to provide remote and/or on-site technical support

A System Operations team resides in Chicago. The System Operations Center (SOC) is staffed by trained professionals 24 hours a day, seven days a week to provide the following functions:

- Control and supervise in real time, the operation parameters (wind turbines, electrical grid, and meteorological stations);
- Operate the wind turbines. Remote operations will solve approximately 60% of the wind turbine faults. For the rest of the wind turbine faults, the SOC will dispatch maintenance crews;

- Operate high voltage equipment (substations, transformers, transmission and interconnection facilities), to ensure the generated energy can be transmitted to the electrical grid;
- Maintain high safety standards in the following ways -

    Apply health and safety rules to every operation

    Develop operation procedures to manipulate high voltage installations.

    Cooperate with local emergency services if required

    Coordinate maintenance operations to reduce risks

    Make the appropriate notifications to the FAA in the event obstruction lighting fails.
- Respect the environment -

    Manage and dispose of all waste generated at the Project

    Make the appropriate notifications in the event of spills or contamination

The SOC ensures the Project is constantly monitored and controlled. The Chicago SOC is functionally identical to ACCIONA's SOC in Pamplona, Spain. In the event of interruption of service from the Chicago SOC control of the Project can be transferred to the O&M team at the Project and ACCIONA's SOC in Pamplona, Spain.

The Project's turbines, regardless of size or type, will have Supervisory Control and Data Acquisitions (SCADA) communication technology to control and monitor the wind farm. The SCADA communications system permits automatic, independent operation and remote supervision, thus allowing the simultaneous control of all wind turbines.

Each wind turbine in the Project will communicate directly with the SCADA system regarding performance monitoring, energy reporting, and trouble-shooting. The SCADA system also provides overall control of the wind farm.

In addition to providing wind farm control, the SCADA system offers access to wind turbine generation or production data, availability, meteorological, and communications data, as well as alarms and communication error information. Performance data and parameters for each turbine (generator speed, wind speed, power output, etc.) can also be viewed, and turbine status can be changed. There is also a snapshot facility that collects frames of operating data to aid in diagnostics and troubleshooting.

Project inspection and maintenance is performed on the following intervals:

- First Service Inspection. The first service inspection will take place one to three months after the turbines have been commissioned. At this inspection, particular attention is paid to tower bolt tensioning and equipment lubrication.
- Semi-Annual Service Inspection. Regular service inspections commence six months after the first inspection. The semi-annual inspection consists of lubrication and a test of the turbine trip system.

- Annual Service Inspection. The yearly service inspection consists of a semi-annual inspection plus a full component check. Bolts are checked with a torque wrench. The check covers 10 percent of the bolts. If any bolts are found to be loose, all bolts in that assembly are tightened and the event is logged.
- Two Years Service Inspection. The two years service inspection consists of the annual inspection, plus checking and tightening of electrical terminal connectors.
- Five Years Service Inspection. The five years inspection consists of the annual inspection, an extensive inspection of the wind braking system, checking and testing of oil and grease, balance check, and tightness of terminal connectors.

The O&M field duties include performing all scheduled and unscheduled maintenance including periodic operational checks and tests, regular preventive maintenance on all turbines, related facilities and equipment, safety systems, controls, instruments, and machinery, including:

- Maintenance on the wind turbines and on the mechanical, electrical power, and communications system;
- Performance of all routine inspections;
- Maintenance of all oil levels and oil filters;
- Maintenance of the control systems, all structures associated with the wind farm, access roads, drainage systems, and other facilities necessary for the operation of the wind farm;
- Maintenance of all O&M field maintenance manuals, service bulletins, revisions, and documentation for the wind farm;
- Maintenance of all parts, price lists, and computer software;
- Maintenance and operation of interconnection facilities;
- Provision of all labor, services, consumables, and parts required to perform scheduled and unscheduled maintenance on the wind farm, including repairs and replacement of parts and removal of failed parts;
- Assistance as needed with avian and other wildlife studies;
- Management of lubricants, solvents and other hazardous materials as required by local and/or state regulations;
- Maintain appropriate levels of spare parts in order to service equipment;
- Obtaining all necessary equipment including the rental of industrial cranes for removal and reinstallation of turbine components;
- Hiring, training, and supervising the work force necessary to meet the general maintenance requirements;
- Maintenance of site security; and
- Support for community outreach efforts.

11.0 COSTS

The Applicant has estimated the capital cost for the wind farm to be approximately $2,000 to $2,400 per installed kW of nameplate capacity, depending on final turbine, construction, and interconnection costs. The largest portion, approximately 70% of the total cost, of the Bitter Root Project capital investment is attributable to the cost of the wind turbines. Infrastructure costs for access road construction and electrical collection systems also represent large cost outlays. Capital costs include costs of development, engineering, procurement and construction.

The Applicant will finance the Project. Financing is not a risk to beginning construction as the Applicant can balance sheet finance, get a construction loan, and/or get a turbine supply loan prior to construction of the Project if necessary. The Project will ultimately be financed at or after the Commencement of Delivery (COD).

The Applicant estimates operating costs of the complete 138 MW Project to be $40,000 to $60,000 per turbine per year. Operating costs include costs associated with operation and maintenance of the Project and fees, including the Minnesota production tax and landowner payments.

The Applicant will be responsible for financing all pre-development, development, and construction activities. The Applicant anticipates financing the cost of all pre-development activities through internal funds. Construction will be financed with internal funds or a combination of internal funds and third-party sources of debt and equity capital.

Permanent financing will be provided with the Applicant's internal funds or a combination of internal funds and third-party sources of debt and equity capital. ACCIONA Energy typically retains a long-term interest in its wind projects.

The Bitter Root Project will pay a Wind Energy Production Tax to the local units of government of $0.0012 per kWh of electricity produced, resulting in an annual Wind Energy Production tax ranging from approximately $503,834 to $539,357.

12.0 SCHEDULE

The Applicant expects to begin construction of the Project in 2011 and begin commercial operation approximately 12-18 months after commencement of construction. To accomplish this, the Applicant has acquired land options and is in the process of obtaining necessary easements from landowners, which will be completed by year-end 2010. The Applicant expects the Site Permit to be issued within approximately six months of filing this Application. Preconstruction surveys and studies are currently underway and will continue through 2010. Equipment procurement from Applicant's own facilities and/or third party vendors will occur on a schedule need to support a 2011 construction start.

The Applicant will be responsible for undertaking all required environmental review and will obtain all permits and licenses that are required following issuance of the LWECS Site Permit. The commercial operation date is dependent on the completion of the interconnection, permitting, and other development activities.

13.0 ENERGY PROJECTIONS

The Bitter Root Project will have 92 x 1.5 MW or 46 x 3.0 MW turbines with a total nameplate capacity of 138 MW. Depending on the net capacity factor of the Bitter Root Project, expected between 35 and 40 percent, the Project will generate between 423,108,000 and 483,552,000 kilowatt-hours annually.

14.0 DECOMMISSIONING AND RESTORATION

The Bitter Root Project decommissioning and restoration plan is in general accordance with the requirements of Minnesota Rules 7836.0500, subp. 13. The Applicant anticipates that the life of the Bitter Root Project will be no less than 20-30 years and it requests the right to re-apply for a LEWCS Site Permit and continue operation of the Bitter Root Project upon expiration of the original LEWCS Site Permit. As the Bitter Root Project reaches the design life of the turbines, issues of decommissioning vs. repowering will be evaluated.

The estimated decommissioning cost in current dollars is expected to be $58,000 per turbine, including associated facilities. The Applicant requests the right to re-evaluate decommissioning alternatives at the end of the LWECS Site Permit term and to update decommissioning costs. The Applicant may decide to re-apply for a LWECS Site Permit and continue operation of the Project, depending on sale of power from the Project. The Applicant may also decide to retrofit, repower or replace the turbines and power system with upgrades based on new or available technology to continue to operate the Project.

Within 18 months from the time the facility ceases to operate decommissioning will be complete. The Applicant will be responsible for all costs to decommission the Project and associated facilities. Based on estimated costs of decommissioning and the salvage value of decommissioned equipment, the salvage value of the wind farm is expected to exceed the costs of decommissioning, but this will depend upon the prevailing rates for salvage value of the equipment and labor costs.

The salvage value of the turbines and other components should ensure that sufficient funds will be available to pay for decommissioning and restoration costs. To the extent that the salvage value does not cover decommissioning costs, and to ensure sufficient funds are available for this, the Applicant will review and update the estimated costs for decommissioning and restoration in 2026, or 15 years after Project commissioning. A revised cost estimate of decommissioning and salvage value will be submitted to the PUC for review and comment. Beginning in the year the Project is commissioned, the Applicant with either create an initial reserve fund or enter into a surety bond agreement and create an escrow account, or provide for a combination of both a reserve and

surety bond, that will ultimately fund approximately $5.4 million (plus earned interest) to pay for decommissioning and site restoration costs after Project operations cease, to the extent that the salvage value does not cover decommissioning costs.

Decommissioning will involve removal of all above-ground wind facilities including towers, turbine generators, transformers, overhead cables, buildings, and ancillary equipment. Foundations will be removed to a depth of 4 feet below grade. All access roads will be removed unless the affected landowner provides written notice that the road or portions of the road can remain. Additionally, any disturbed surface shall be graded, reseeded, and restored as nearly as possible to its preconstruction condition.

15.0 IDENTIFICATION OF POTENTIAL PERMITS/APPROVALS

The federal and state permits or approvals that have been identified as potentially being required for the construction and operation of the Project are shown in **Table 15-1**. Permits dependent on the final site layout will be applied for after receiving PSC approval, but prior to construction.

Table 15-1: Potential Permits and Approvals Required for Construction and Operation of the Proposed Facility

Agency		Name and Type of Approval
Federal	Federal Aviation Administration	Notice of Proposed Construction or Alteration (within six miles of Public Aviation Facility and structures over 200 feet to complete a 7460 Proposed Construction or Alteration Form)
		Determination of No Hazard
	Natural Resources Conservation Service	Prime Farmland Permit
	U.S. Army Corps of Engineers	Section 404 Permit (for discharges of dredged or fill material into waters of the United States, and adjacent wetlands)
State of Minnesota	Minnesota Public Utilities Commission	Large Wind Energy Conversion System (LWECS) Site Permit
		Large Electric Generating Facilities (LEGF) Certificate of Need

Table 15-1: Potential Permits and Approvals Required for Construction and Operation of the Proposed Facility		
Agency		**Name and Type of Approval**
	Minnesota State Historic Preservation Office	Cultural and Historical resources review; State and National Register of Historic Sites review
	Minnesota Board of Water and Soil Resources	Wetland Conservation Act (WCA) Approval
	Minnesota Department of Natural Resources	Public Water Works Permit
		License to Cross Public Lands and Waters
		Water Appropriation Permit (dewatering)
	Minnesota Pollution Control Agency	NPDES Permit for Construction Activities and Storm Water Pollution Prevention Plan (SWPP)
		License for Very Small-Quantity Generator of Hazardous Waste
		Aboveground Storage Tank (AST) Notification Form
		Section 401 Water Quality Certification
	Minnesota Department of Health	Plumbing Plan Review
		Water Well Permit
		Well Construction Notification (dewatering)
	Minnesota Department of Transportation	Utility Access Permit
		Highway Access Permit
		Aviation clearance from Office of Aeronautics (review and approval of FAA 7460 permit, if needed)

Table 15-1: Potential Permits and Approvals Required for Construction and Operation of the Proposed Facility		
Agency		**Name and Type of Approval**
		Oversize and Overweight Program
Local	Yellow Medicine County	Building Permits
		Conditional Use Permit (meteorological towers)
		Individual Septic Tank Systems (ISTS) Permits
		Driveway Permit
		Utility Permit
		Moving Permit
		Overwidth/Overweight Permits
	Lincoln County	Building Permits
		Individual Septic Tank Systems (ISTS) Permit
		Driveway Permit
		Utility Permit
		Overwidth/Overweight Permits
	Yellow Medicine Soil and Water Conservation District; Lincoln County Soil and Water Conservation District	Wetland Conservation Act Approval
	Townships	Road Access Permits

16.0 REFERENCES

Anfinson, S. F. Archaeological Regions in Minnesota and the Woodland Period. In The Woodland Tradition in the Western Great Lakes: Papers Presented to Elden Johnson, edited by Guy Gibbon, pp. 136-166. Minneapolis, Minnesota.

Chandler, V.W. 1994. *Minnesota at a Glance: Earthquakes in Minnesota.* University of Minnesota and the Minnesota Geological Survey. 4 pages.

City Data. Minnesota Climate. http://www.city-data.com/states/Minnesota-Climate.html Retrieved 9/11/08.

Cleland, D.T., P.E. Avers, W.H. McNab, M.E. Jensen, R.G. Bailey, T. King, and W.E. Russell. 1997. National hierarchical framework of ecological units. In: *Ecosystem Management: Applications for sustainable forest and wildlife resources*, ed. M.S. Boyce and A. Haney, pp. 181-200. New Haven, CT: Yale University Press.

Crockford, N.J. 1992. A Review of the Possible Impacts of Wind Farms on Birds and Other Wildlife. JNCC Report No. 27. Joint Nature Conservancy Committee. Peterborough, UK. 60 pp.
Coffin, B.; Pfannmuller, L., eds. 1988. *Minnesota's endangered flora and fauna*. Minneapolis, MN: University of Minnesota Press.

Culvert Lake Data. http://www.fishingworks.com/lakes/south-dakota/deuel/canby-nw/culvert-lake/#fc. Retrieved 8/15/2008.

Cummins and Grigal.1981. *Regional Landscape Ecosystems of Michigan, Minnesota, and Wisconsin*. 1 http://www.npwrc.usgs.gov/resource/habitat/rlandscp/sec2.htm. Retrieved 7/1/2008.

Elm Creek Wind, LLC. 2007. Application for Certificate of Need: Elm Creek Wind Project, Jackson and Martin Counties, Minnesota. Docket 07-789. Submitted to Minnesota MPUC June 12, 2007. Prepared by Frederickson & Byron, P.A., Minneapolis, MN.
http://energyfacilities.puc.state.mn.us/documents/19191/Elm%20Creek%20Site%20Application%201.pdf.

Erickson, W.P., G.D. Johnson, D. Young, D. Strickland, R. Good, M. Bourassa, K. Bay, and K. Sernka. 2002b. Synthesis and Comparison of Baseline Avian and Bat Use, Raptor Nesting and Mortality Information from Proposed and Existing Wind Developments. Technical report prepared for Bonneville Power Administration, Portland, Oregon by WEST, Inc., Cheyenne, Wyoming. December 2002. http://www.bpa.gov/Power/pgc/wind/Avian_and_Bat_Study_12-2002.pdf.

Erickson, W.P., J. Jeffrey, K. Kronner, and K. Bay. 2004. Stateline Wind Project Wildlife Monitoring Final Report: July 2001 - December 2003. Technical report for and peer reviewed by FPL Energy, Stateline Technical Advisory Committee, and the Oregon

Energy Facility Siting Council, by Western EcoSystems Technology, Inc. (WEST), Cheyenne, Wyoming, and Walla Walla, Washington, and Northwest Wildlife Consultants (NWC), Pendelton, Oregon. December 2004. http://www.west-inc.com.

Federal Emergency Management Agency (FEMA). 2008. *Floodplain Mapping of Lincoln County*. www.fema.gov. Retrieved 7/1/2008.

Federal Emergency Management Agency (FEMA). 2008. *Floodplain Mapping of Yellow Medicine County*. www.fema.gov. Retrieved 7/1/2008.

Johnson, G.D., W.P. Erickson, K. Bay, and K. Kronner. 2002. Baseline Ecological Studies for the Klondike Wind Project, Sherman County, Oregon. Final report prepared for Northwestern Wind Power, Goldendale, Washington, by Western EcoSystems Technology, Inc. (WEST) Cheyenne, Wyoming, and Northwest Wildlife Consultants, Inc. (NWC), Pendleton, Oregon. May 29, 2002.

Johnson, G.D., W.P. Erickson, and J. White. 2003. Avian and Bat Mortality During the First Year of Operation at the Klondike Phase I Wind Project, Sherman County, Oregon. March 2003. Technical report prepared for Northwestern Wind Power, Goldendale, Washington, by Western EcoSystems Technology, Inc. (WEST), Cheyenne, Wyoming. http://www.west-inc.com.

Koford, R., A. Jain, G. Zenner, and A. Hancock. 2005. Avian Mortality Associated with the Top of Iowa Wind Farm. Progress Report, Calendar Year 2004. February 2005. Iowa Cooperative Fish and Wildlife Research Unit, Iowa State University. Aimes, Iowa. 12 pp. http://www.horizonwind.com/images_projects/what_were_doing/TOI_Avian_Annual_Interim_Report_2004_020205.pdf.

Lincoln County Parks Data. http://www.infosports.com/p.cgi?t=cp&s=MN&c=Lincoln. Retrieved 8/15/2008.

Lincoln County. *Lincoln County Comprehensive Plan.* Prepared by Lincoln County, Prairie Partners, Inc., the Southwest Regional Commission of Slayton, and the Minnesota Office of Environmental Assistance. January 2001.

Lincoln County: Activity Guide and Map. http://www.mncounties3.org/lincoln/tourism.htm. Retrieved 8/14/2008.

Lincoln County: City Data. http://www.city-data.com/county/Lincoln_County-MN.html. Retrieved 8/14/2008.

Lincoln Pipestone Rural Water. http://www.lprw.com. Retrieved 9/2/2008.

Midwest Regional Climate Center, 2008. Historical Climate Data for Station 211263 Canby, Minnesota.

http://mcc.sws.uiuc.edu/climate_midwest/historical/precip/mn/211263_psum.html. Retrieved 9/10/2008.

Midwest Regional Climate Center, 2008. Historical Climate Data for Station 211263 Canby, Minnesota. http://mcc.sws.uiuc.edu/climate_midwest/historical/temp/mn/211263_tsum.html. Retrieved 9/10/2008.

Minnesota Climatology Working Group – State Climatology Office. Historical Climate Data Retrieval. http://climate.umn.edu/pdf/wind_climate.pdf. Retrieved 9/11/08.

Minnesota Department of Commerce, July 16, 2006. http://www.state.mn.us/mn/externalDocs/Commerce/Minnesota_Wind_Farms_110702041637_WindFarms.jpg. Retrieved September 16, 2008.

Minnesota Department of Health. 2008. *County Well Index Online*. St. Paul, MN. http://www.health.state.mn.us/divs/eh/cwi/

Meteorology and Atomic Energy, Slade D.H., 1968.

MN Department of Natural Resources (DNR). 2008. Appleton Area Recreational OHV Park. http://www.dnr.state.mn.us/ohv/trail_detail.html?id=4. Retrieved 8/15/2008.

MN Department of Natural Resources (DNR). 2008. Ecological Classification System. http://www.dnr.state.mn.us/ecs/index.html Retrieved 9/11/2008 Minnesota Department of Natural Resources (DNR). *Minnesota's Native Vegetation: A Key to Natural Communities.* Department of Natural Resources Natural Heritage Program. 1993.

MN Department of Natural Resources (DNR). 2008. Southwestern Minnesota Snowmobile Trails Mapping. http://files.dnr.state.mn.us/maps/snowmobiling/map6.pdf. Retrieved 8/15/2008.

MN Department of Natural Resources (DNR). 2008. WMA Detail Report; Sioux Nation WMA. http://www.dnr.state.mn.us/wmas/detail_report.html?map=COMPASS_MAPFILE&mode=itemquery&qlayer=bdry_adwma2py3_query&qitem=uniqueid&qstring=WMA0063100. Retrieved 8/15/2008.

MN Department of Natural Resources (DNR). 2008. WMA Detail Report; Bohemian WMA. http://www.dnr.state.mn.us/wmas/detail_report.html?map=COMPASS_MAPFILE&mode=itemquery&qlayer=bdry_adwma2py3_query&qitem=uniqueid&qstring=WMA0019000. Retrieved 8/15/2008.

MN Department of Natural Resources (DNR). 2008. WMA Detail Report; Saum Memorial WMA. http://www.dnr.state.mn.us/wmas/detail_report.html?map=COMPASS_MAPFILE&mode

=itemquery&qlayer=bdry_adwma2py3_query&qitem=uniqueid&qstring=WMA0163600. Retrieved 8/15/2008.

MN Department of Natural Resources (DNR). 2008. WMA Detail Report; Penthole WMA. http://www.dnr.state.mn.us/wmas/detail_report.html?map=COMPASS_MAPFILE&mode=itemquery&qlayer=bdry_adwma2py3_query&qitem=uniqueid&qstring=WMA0050800. Retrieved 8/15/2008.

MN Department of Natural Resources (DNR). 2000. Surficial Hydrogeology, Randy Bradt and James A. Berg.http://files.dnr.state.mn.us/waters/groundwater_section/mapping/rha/r04_umrb/pdf_files/rha4p3.pdf. Retrieved 9/17/08.

MN Department of Natural Resources (DNR). 2008. Yellow Bank Hills SNA. http://www.dnr.state.mn.us/snas/sna01024/index.html. Retrieved 8/15/2008.

Minnesota Department of Transportation. 2000. County Pit Maps. Yellow Medicine County, Minnesota. http://www.mrr.dot.state.mn.us/geotechnical/aggregate/maps.asp. Retrieved 8/14/2008.

Minnesota Department of Transportation. 2001. County Pit Maps. Lincoln County, Minnesota. http://www.mrr.dot.state.mn.us/geotechnical/aggregate/maps.asp. Retrieved 8/14/2008.

Minnesota Department of Transportation. 2007. Transportation Data and Analysis, County Traffic Volume Maps. http://www.dot.state.mn.us/traffic/data/maps/thcountymapdex.html. Retrieved 7/21/2008.

Minnesota Geological Survey. 1998. *Regional Hydrogeologic Assessment (Part A) - Upper Minnesota River Basin, Minnesota*. http://www.lmic.state.mn.us/chouse/metadata/rha_4a.htm. Retrieved July 1, 2008.

Minnesota Ornithologist Union. *Lincoln County Bird Checklist*. http://moumn.org/. Retrieved 7/1/2008 Minnesota Ornithologist Union. *Yellow Medicine County Bird Checklist*. http://moumn.org/. Retrieved 7/1/2008.

Minnesota Pollution Control Agency. Feedlot Registrations by County Mapping. http://proteus.pca.state.mn.us/publications/wq-f4-09.pdf. Retrieved 8/15/2008.

Minnesota Pollution Control Agency. Livestock and the Environment, Feedlot Program Overview. http://proteus.pca.state.mn.us/publications/wq-f1-01.pdf. Retrieved 8/15/2008.

Minnesota Rules 2007. Wind Siting Rules, Chapter 7836. [St. Paul]: Minnesota Revisor of Statutes.

Minnesota Statutes 2007. Minnesota Power Plant Siting Act, Sections 216E.001 to 216E.18. [St. Paul]: Minnesota Revisor of Statutes.

Myers Field Airport, Canby , Minnesota. FAA Data. http://www.airnav.com/airport/KCNB. Retrieved 8/14/2008.

National Climatic Data Center (NCDC). November 1998. Climatic Wind Data for the United States. http://www4.ncdc.noaa.gov. Retrieved 9/11/2008.

National Climatic Data Center (NCDC). Climate of Minnesota. http://www.ncdc.noaa.gov. Retrieved 9/11/2008.

National Climatic Data Center (NCDC). 2008. Storm Events Database for Minnesota. http://www4.ncdc.noaa.gov/cgi-win/wwcgi.dll?wwevent~storms. Retrieved 9/10/2008.

National Institute of Environmental Health Sciences. EMF Electric and Magnetic Fields Associated with the Use of Electric Power, Questions and Answers. June 2002. .

National Institute of Environmental Health Sciences EMF-RAPID Program Staff, 1999. NIEHS Report on Health Effects from Exposure to Power Line Frequency Electric and Magnetic Fields.

Northwest Economic Associates. 2003. Assessing the Economic Development Impacts of Wind Power. National Wind Coordinating Committee. Washington. http://www.nationalwind.org/publications/economic/econ_final_report.pdf

Northwest Wildlife Consultants, Inc. (NWC) and Western EcoSystems Technology, Inc. (WEST). 2007. Avian and Bat Monitoring Report for the Klondike II Wind Power Project. Sherman County, Oregon. Prepared for PPM Energy, Portland, Oregon. Managed and conducted by NWC, Pendleton, Oregon. Analysis conducted by WEST, Cheyenne, Wyoming. July 17, 2007.

Sioux Valley Hospital Canby Campus Heliport (91MN) – Nearby Airports. http://www.airport-data.com/airport/91MN/nearby-airports.html. Retrieved 8/14/2008.

Sioux Valley Hospital Canby Campus Heliport. Heliport Data. http://skyvector.com/airport/91MN/Sioux-Valley-Hospital-Canby-Campus-Heliport. Retrieved 8/14/2008.

Tester, John R. 1995. *Minnesota's Natural Heritage, An Ecological Perspective.* University of Minnesota Press. 332 pages.

U.S. Census Bureau. 2000. American Factfinder; County Census Data. http://factfinder.census.gov/servlet/GCTTable?_bm=y&-geo_id=04000US27&-_box_head_nbr=GCT-PH1&-ds_name=DEC_2000_SF1_U&-format=ST-2. Retrieved 8/15/2008.

United States Department of Agriculture, Natural Resource Conservation Service. Ecological and Interpretative Group Definitions. http://soils.usda.gov/technical/handbook/contents/part622.html. Retrieved 9/2/2008.

US Fish and Wildlife Service (USFWS). 2008 *County Distribution of Federally-listed Threatened, Endangered, Proposed, and Candidate Species.* www. fws.gov/midwest/endangered/lists/minnesot-cty.htm1. Retrieved 7/1/2008.

United States Geologic Survey (USGS). *GAP Land Coverage*. http://datagateway.nrcs.usda.gov/. Retrieved 7/1/2008.

University of Minnesota, Remote Sensing and Geospatial Analysis Laboratory. *Minnesota 2000 Level I Landsat Landcover Classification*.

Yellow Medicine County Parks Mapping. ftp://mrbdc.mnsu.edu/pub/basin/reports/recdoc98/recco87.pdf. Retrieved 8/15/2008.

Yellow Medicine County. *Yellow Medicine County Comprehensive Plan.* Prepared by the Upper Minnesota Valley Regional Development Commission. April 2006.

Yellow Medicine County: City Data. http://www.city-data.com/county/Yellow_Medicine_County-MN.html. Retrieved 8/14/2008.

Young, D.P. Jr., W.P. Erickson, J. Jeffrey, K. Bay, and M. Bourassa. 2005. Eurus Combine Hills Turbine Ranch. Phase 1 Post Construction Wildlife Monitoring Final Report February 2004 February 2005. Technical report for Eurus Energy America Corporation and the Combine Hills Technical Advisory Committee, Umatilla County, Oregon. Prepared by Western EcoSystems Technology, Inc. (WEST), Cheyenne, Wyoming, and Northwest Wildlife Consultants, Inc. (NWC), Pendleton, Oregon.

17.0 DEFINITIONS AND ACRONYMS

AADT	Average Annual Daily Traffic
Aggregate Surface	Road cover used for proposed access roads
ANSI	American National Standards Institute
APE	Area of Potential Effects
ASTM	American Society for Testing and Materials
Asynchronous Generator	A cage-wound generator, also called an induction generator, used to generate alternating current
BMPs	Best Management Practices; prevents soil erosion and sedimentation
Capacity	The capability of a system, circuit, or device for storing electronic charge
Class I	Cultural Resources Inventory Existing data inventory – a large-scale review and compilation of known cultural resource data
Class III	Cultural Intensive Resources Inventory field inventory – complete surface inventory of a specific area.
Commission or PUC	Minnesota Public Utilities Commission
CON	Certificate of Need
CRP	Conservation Reserve Program
dBA	A-weighted decibel
Distribution	Relatively low-voltage lines that deliver electricity to the retail customer's home or business
DOE	US Department of Energy
Electromechanical	Of, relating to, or being a mechanical process or device actuated or controlled electrically; especially being a transducer for converting electrical energy to mechanical energy
EMF	Electric and Magnetic Field

EPC	Engineering, procurement, and construction
EPCRA	Emergency Planning and Community Right-to-Know Act
ESA	Environmental Site Assessment
FAA	Federal Aviation Administration
FEMA	Federal Emergency Management Agency
FIRM	Flood Insurance Rate Maps
FPPA	Farmland Protection Policy Act
ft	foot/feet
GE	General Electric
GWh	Gigawatt hour - Unit of electrical energy equal to one billion (10^9) watt hours, one thousand megawatt hours, 3.6 terajoules, or 3.41 billion British thermal units (Btu).
Gearbox	An assembly of parts including the speed-changing gears and the propeller shaft by which the power is transmitted from an automobile engine to a live axle; the speed-changing gears in such an assembly
Generator	A machine by which mechanical energy is changed into electrical energy
Geotechnical	A science that deals with the application of geology to engineering
Hub	The central part of a circular object (as a wheel or propeller)
Interconnection	To be or become mutually connected
kV	kilovolt
kW	kilowatt
MW	megawatt
m	meter
m/s	meters per second

Micrositing	The process in which the wind resources, potential environmentally sensitive areas, soil conditions, and other site factors, as identified by local, state and federal agencies, are evaluated to locate wind turbines and associated facilities.
MISO	Midwest Independent System Operator
mph	miles per hour
nacelle	A streamlined enclosure (as for an engine), which houses the gearbox, generator, brake, cooling system and other electrical and mechanical systems
NESC	National Electric Safety Code
NHID	Natural Heritage Inventory Database
NPDES	National Pollutant Discharge Elimination System
NRCS	National Resource Conservation Service
NRHP	National Register of Historic Places
NWI	National Wetlands Inventory
Pitch	The action or a manner of pitching; especially an up-and-down movement
Phase I Archaeological Survey	A reconnaissance survey that is conducted to determine if previously undocumented historic or prehistoric properties exist within the Project Area pursuant to field investigation methods established by the SHPO for compliance with Section 106 of the National Historic Preservation Act (NHPA), including the requirements of the Secretary of the Interior's Standards for Identification and Evaluation. These methods may include visual inspection, pedestrian (surface walkover) survey, surface collection, or sub-surface excavation (shovel testing).
PPA	Power Purchase Agreement
Project	Bitter Root Project
Project Area	The proposed overall Project size consisting of approximately 35 square miles located primarily in Yellow Medicine County, with a small portion in adjacent Lincoln County (see **Exhibit 2**)

PTC	Production Tax Credit
RECs	Recognized Environmental Conditions
Resistance	The opposition offered by a body or substance to the passage through it of a steady electric current
Rotor	The rotor consists of three blades mounted to a rotor hub
RD	Rotor Diameter: Diameter of the rotor from the tip of a single blade to the tip of the opposite blade
ROW	Right-of-Way
rpm	Revolutions per minute
SCADA	Supervisory Control and Data Acquisitions (communications technology)
SHPO	State Historic Preservation Office
SNA	Scientific and Natural Areas
Step-up Transformer	A transformer that increases voltage
Substation	A subsidiary station in which electric current is transformed
SWPPP	Storm Water Pollution Prevention Plan
Torque	A force that produces or tends to produce rotation or torsion; also a measure of the effectiveness of such a force that consists of the product of the force and the perpendicular distance from the line of action of the force to the axis of rotation : a turning or twisting force
Transformer	An electrical device by which alternating current of one voltage is changed to another voltage
Transmission	An assembly of parts including the speed-changing gears and the propeller shaft by which the power is transmitted from an automobile engine to a live axle; the speed-changing gears in such an assembly
USACE	US Army Corps of Engineers
USFWS	US Fish and Wildlife Service
WMD	Wetland Management District

WPAs	Waterfowl Protection Area
Yaw	To deviate erratically from a course (as when struck by a heavy sea); especially to move from side to side: to turn by angular motion about the vertical axis