IR 15 Attachment 2: Midtown South (MT-2)

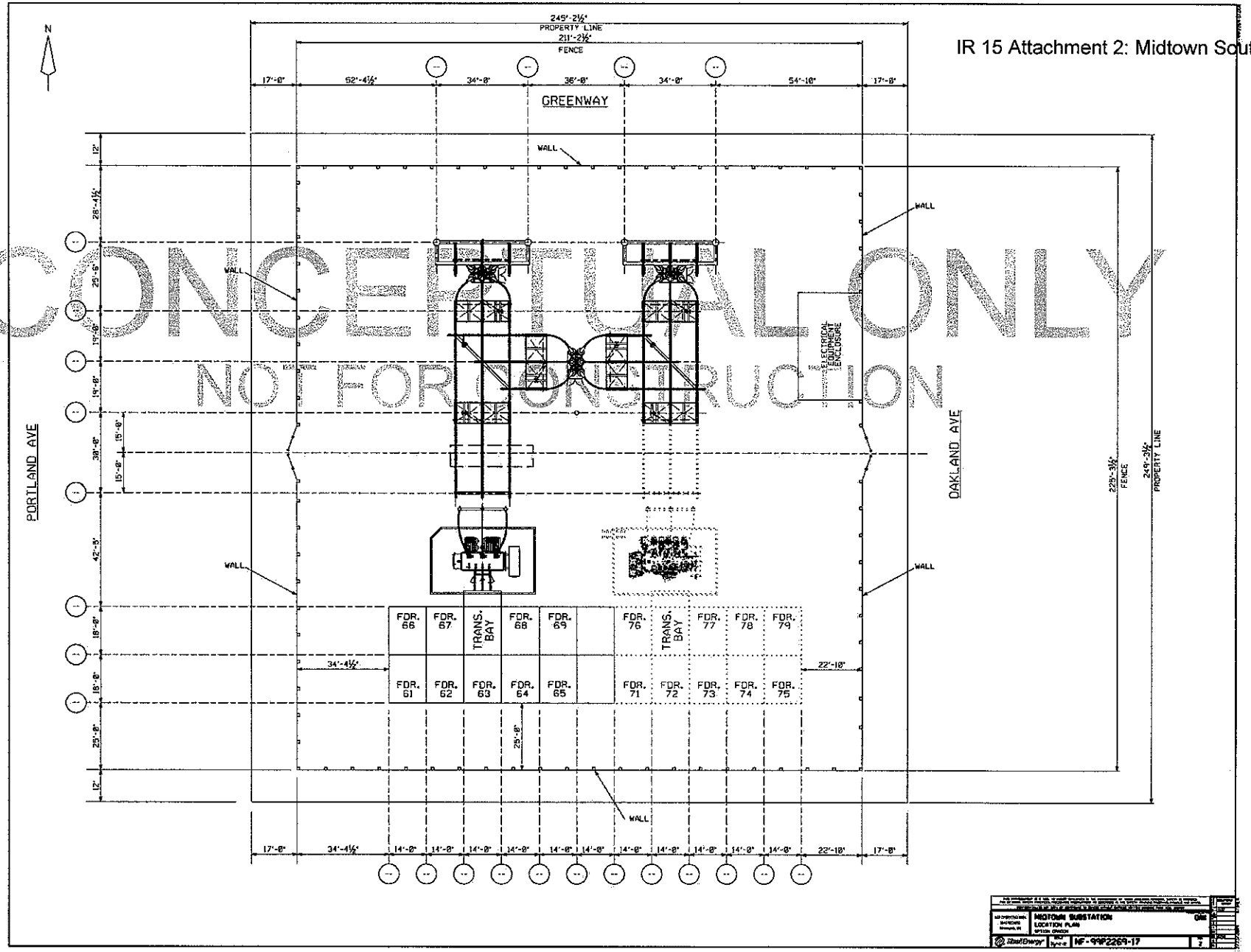

CONCEPTUAL ONLY
NOT FOR CONSTRUCTION

Attachment 2

IR 15 Attachment 3: MT-28S and MT-28N

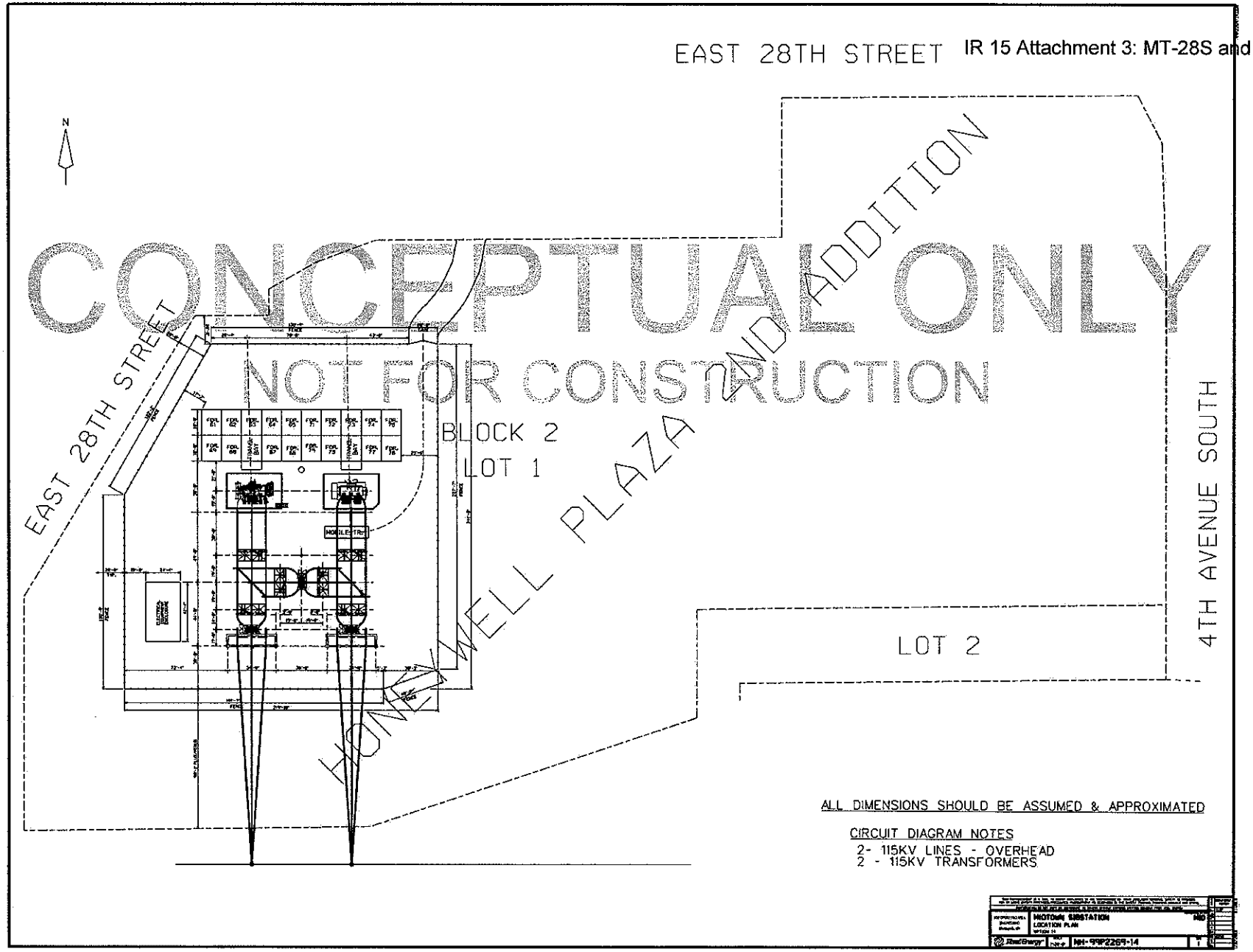

Attachment 2

IR 15 Attachment 4: MT-28W

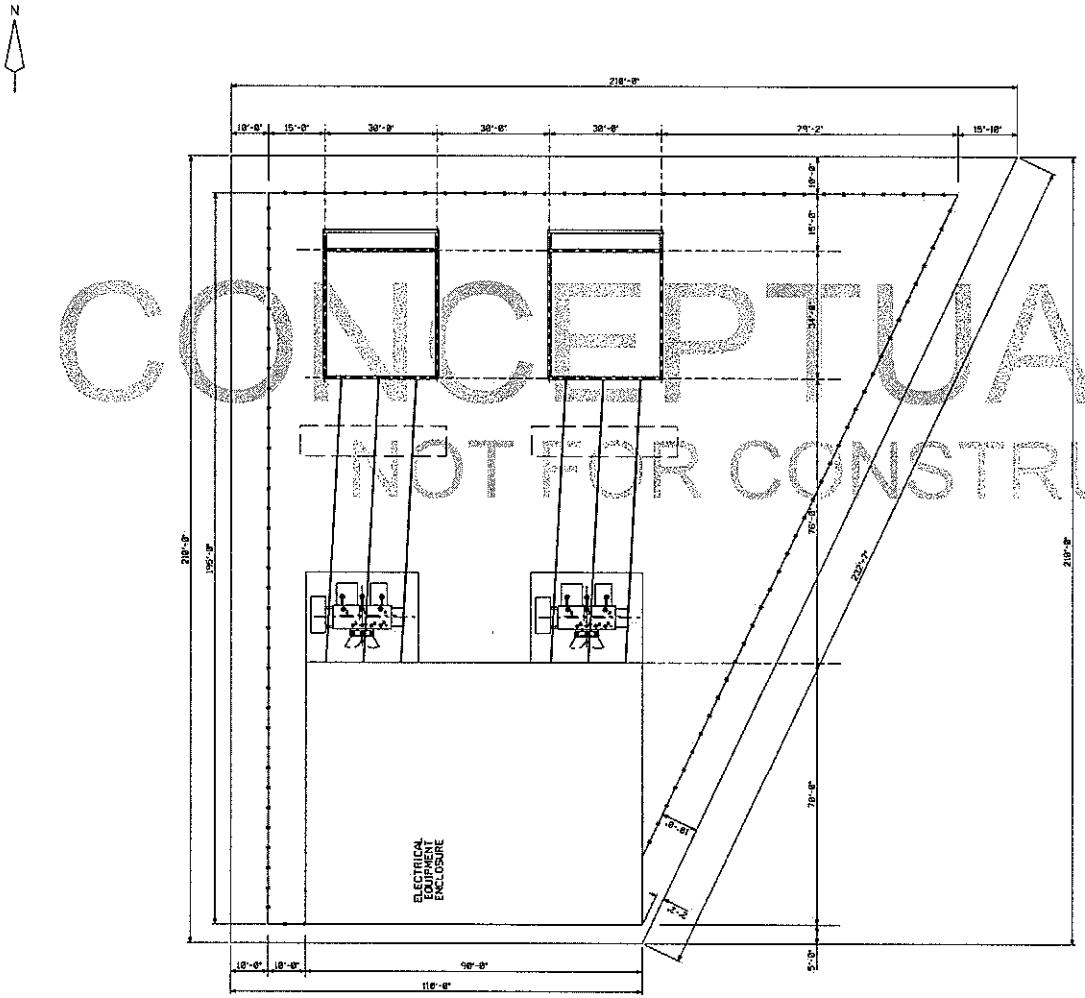

HIGH PROFILE

CONCEPTUAL ONLY
NOT FOR CONSTRUCTION

NSP OPERATING AREA ENGINEERING Minneapolis, MN	MIDTOWN SUBSTATION LOCATION PLAN MT-28W SITE	MID
Xcel Energy	SCALE 1/16"=1'-0"	NH-99P2269-21

Attachment 2

IR 15 Attachment 5: Hiawatha West - Preferred site

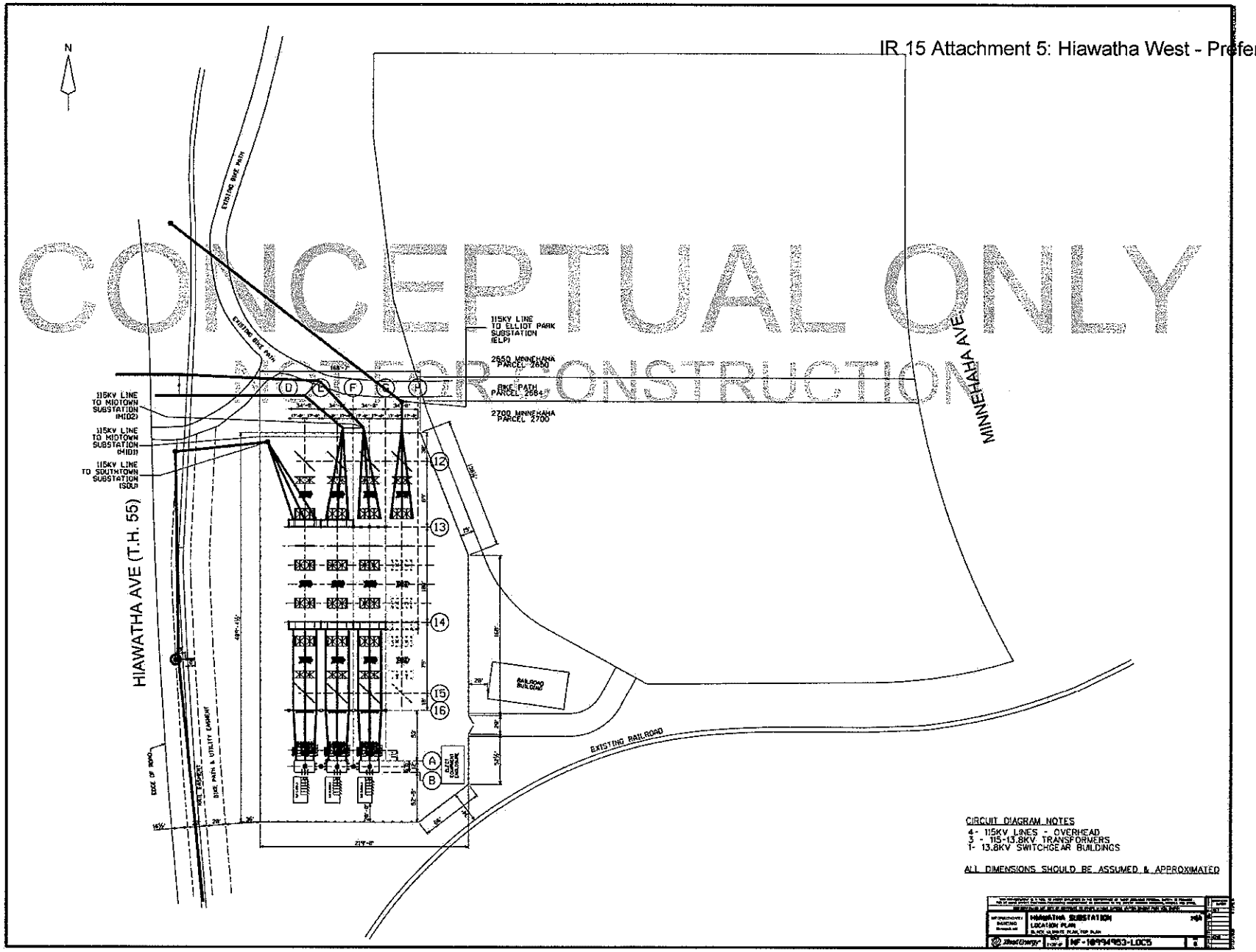

Attachment 2

IR 15 Attachment 6 (HIA-E)

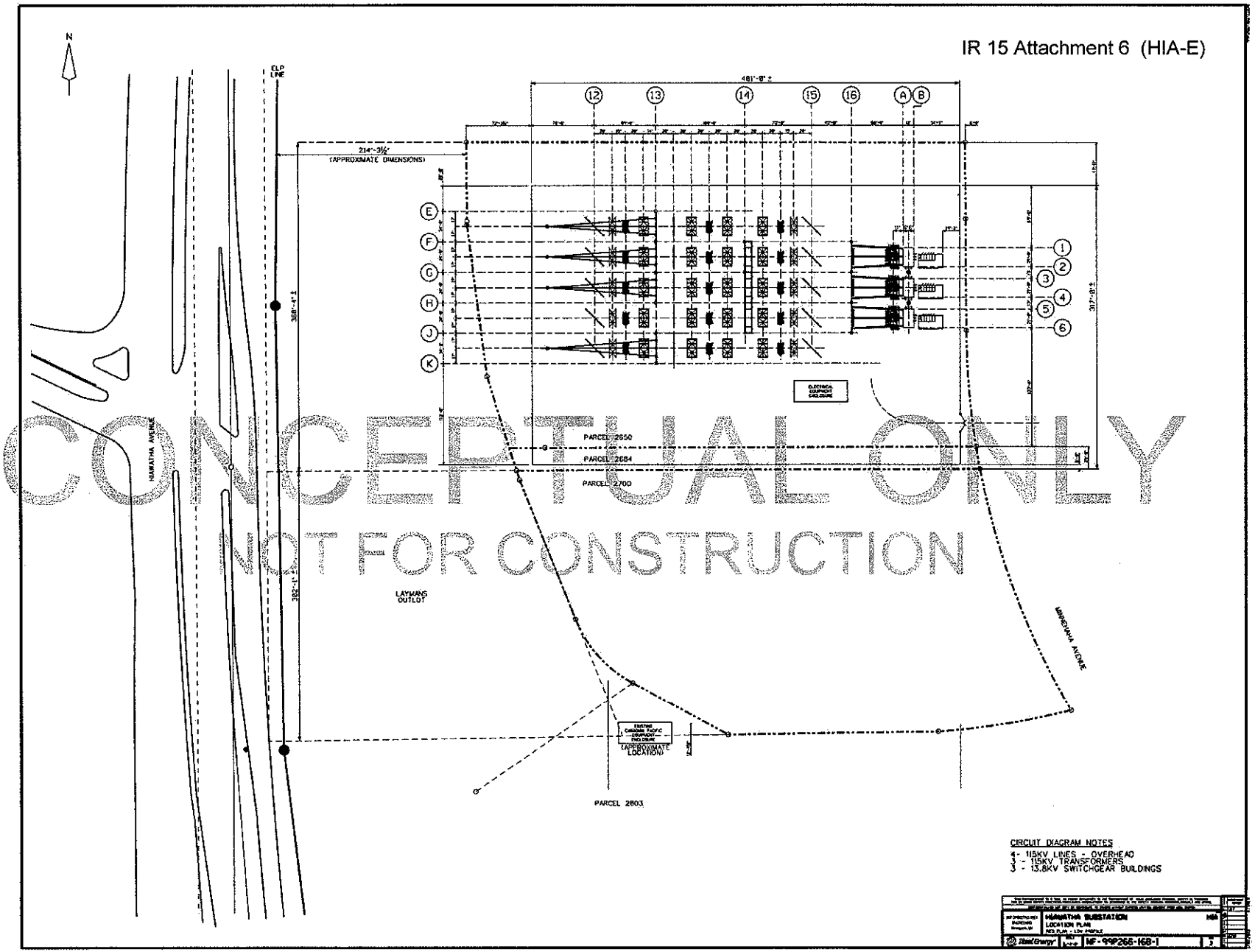

CONCEPTUAL ONLY
NOT FOR CONSTRUCTION

Attachment 2

IR 15 Attachment 7 (HIA-ZD)

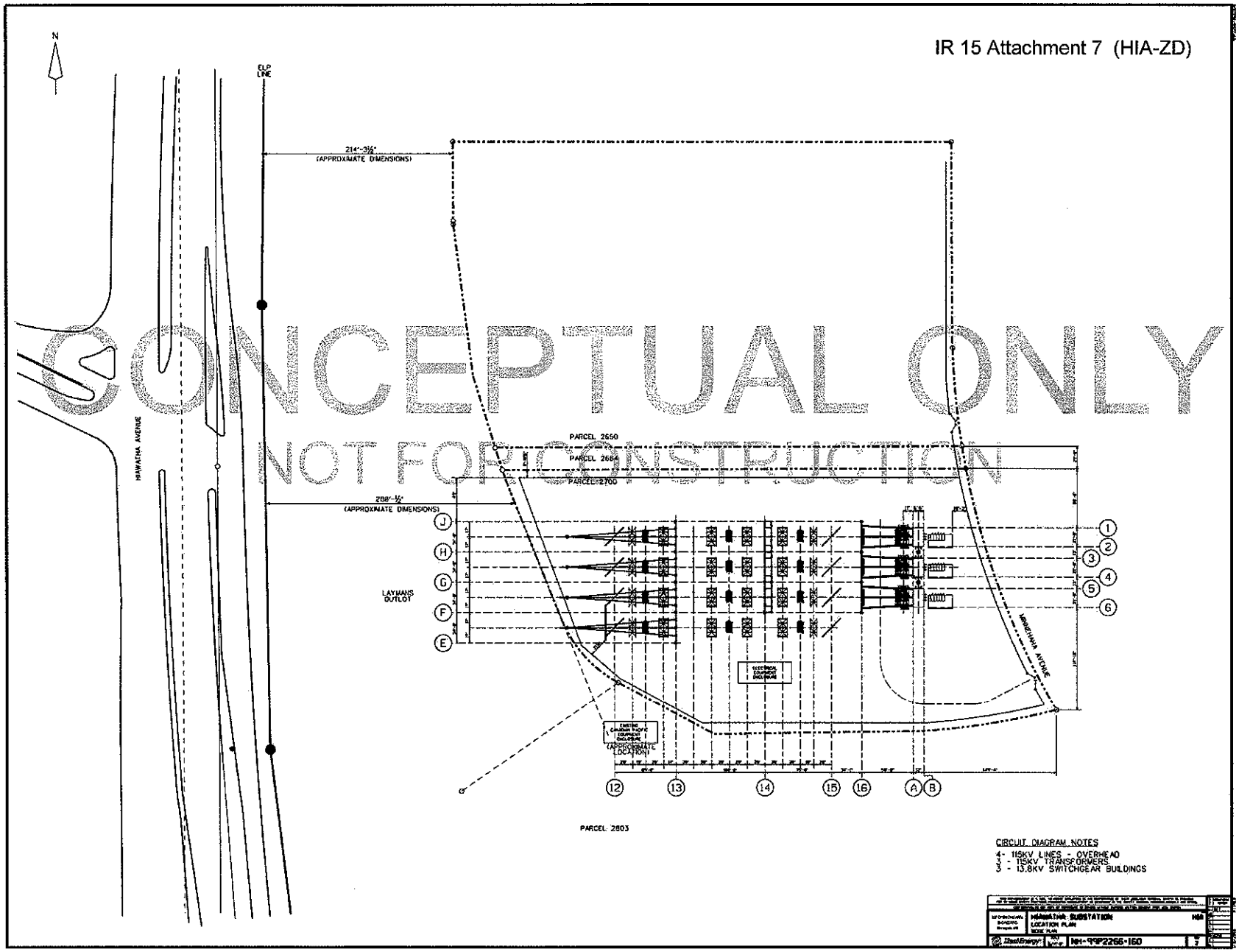

Attachment 2

IR 15 Attachment 8 (HIA-G1)

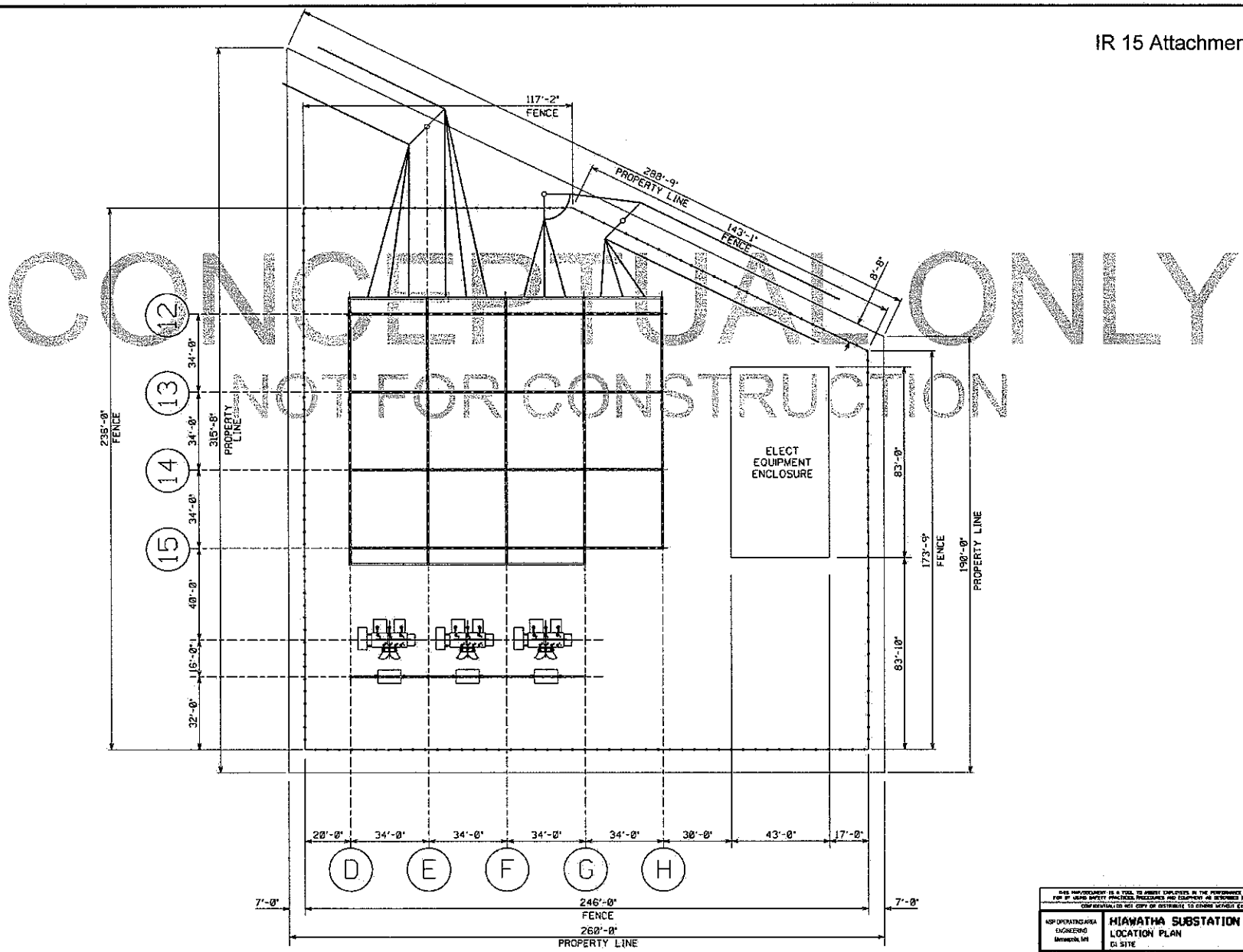

CONCEPTUAL ONLY
NOT FOR CONSTRUCTION

NSP OPERATING AREA ENGINEERING Minneapolis, MN	HIAWATHA SUBSTATION LOCATION PLAN G1 SITE	HIA
Xcel Energy	SCALE 1"=30'-0"	NH-99P226-25	REV 2

Attachment 2

IR 15 Attachment 9 (HIA-G2)

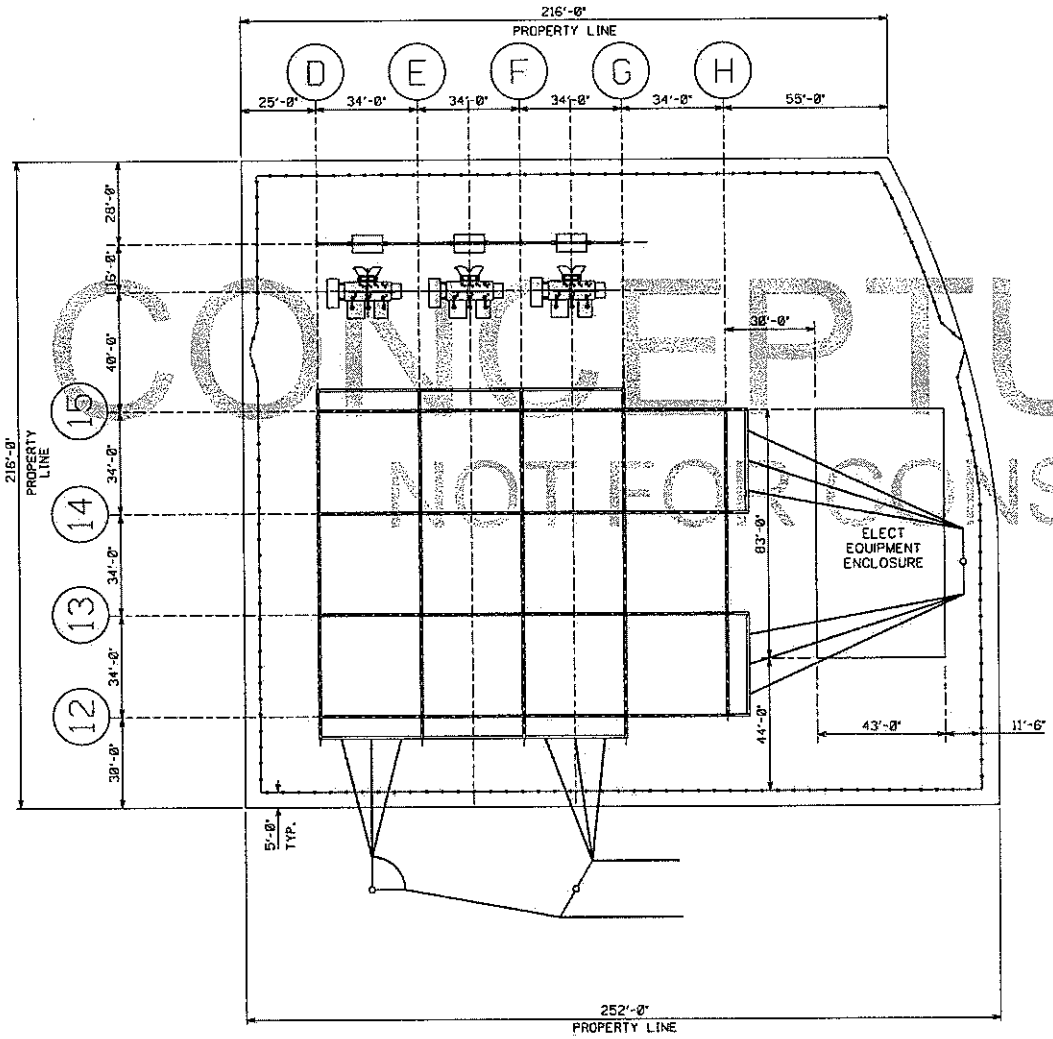

CONCEPTUAL ONLY
NOT FOR CONSTRUCTION

HIAWATHA SUBSTATION
LOCATION PLAN
G2 SITE

NSP OPERATING AREA ENGINEERING
Minneapolis, MN

Xcel Energy

SCALE 1"=38'-4"

NH-99P226-26

REV 1

HIA

Attachment 2

IR 15 Attachment 10 (HIA-G3, HIA-G4, HIA-G5)

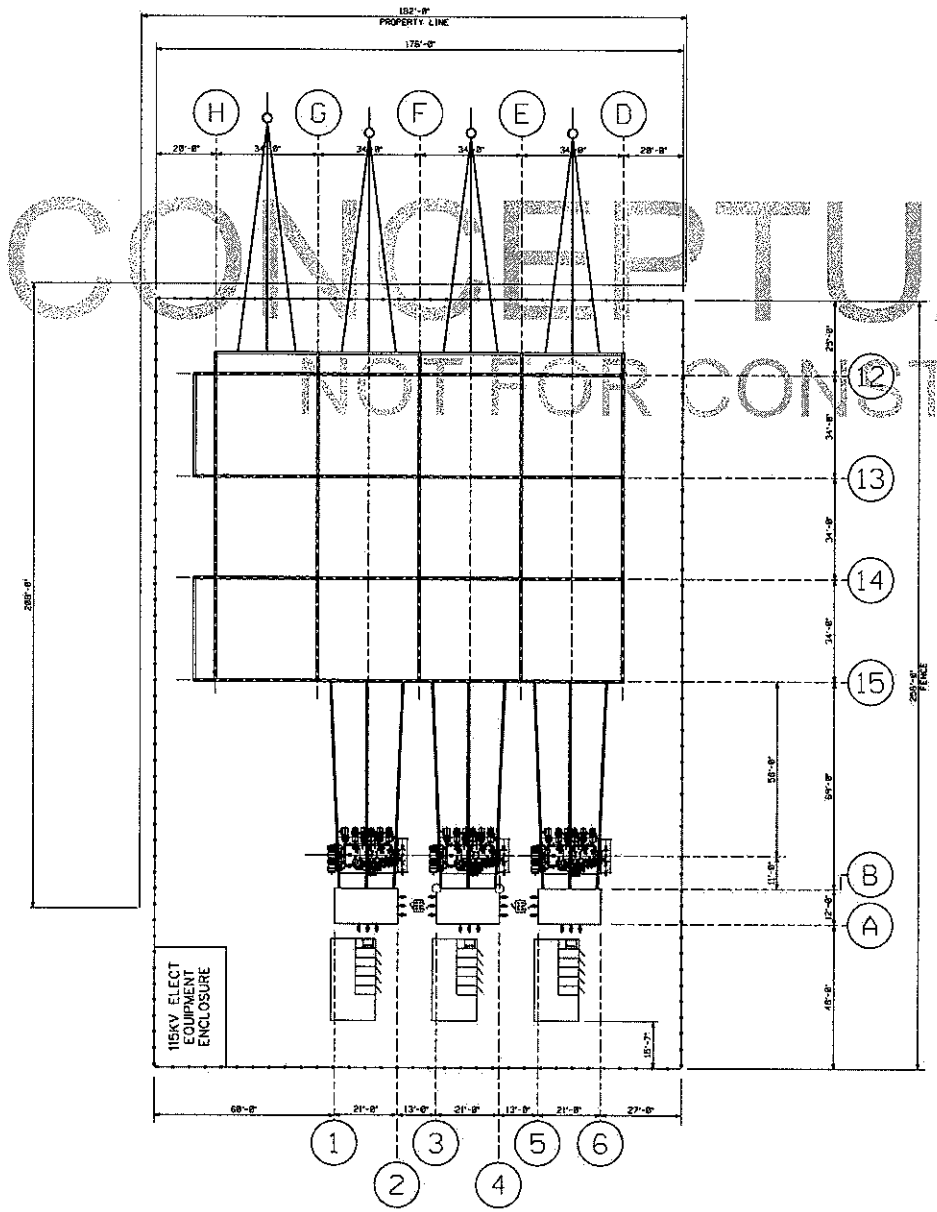

CONCEPTUAL ONLY
NOT FOR CONSTRUCTION

NSP OPERATING AREA ENGINEERING Minneapolis, MN	HIAWATHA SUBSTATION LOCATION PLAN G3 & G5 SITES HIA
Xcel Energy	SCALE 1"=30'-0" NH-99P226-27 REV 1

Attachment 2

MIDTOWN GREENWAY COALITION INFORMATION REQUEST

☐ **Non Public Document – Contains Trade Secret Data**
☐ **Public Document – Trade Secret Data Excised**
☒ **Public Document**

Xcel Energy

Docket No.: OAH 15-2500-20599-2
PUC No. E-002/TL-09-38

Response To: Information Request No. 25

Date Received: September 30, 2009

Question:

State for each Appendix C substation location from identified below the specific reason why the proposed site was rejected by Applicant. If the reason was site contamination, identify the nature of the contamination present on the site and the documents identifying such contamination. If the reason was lack of usable space, state the amount of usable space on the site and provide a comparison with the minimum footprint needed for the substation utilizing a high-profile design. If the reason was a need for business relocation or the need to accommodate future development plans, state with specificity the business that would need to relocate and/or the future development plans with which the proposed substation would conflict. If the reason was the purchase price, provide an estimate of the purchase price along with the basis for that estimate.

Please also state for each substation location identified below whether the location considered by Applicant corresponds to an alternative identified by the Advisory Task Force and, if so, identify the alternative (G-1 through G-5, Mt-28N or MT-28S) to which it corresponds:

A. Western half of the Wells Fargo Home Mortgage parking lot;

B. Interstate 35W park, to the west of Interstate 35, just south of 28th Street;

C. Vacant land near 26th Street and Minnehaha Avenue;

D. Former Xcel Energy Hiawatha Substation Site north of 32nd Street combined with vacant land owned by Mn/DOT.

Response:

The response to each of the subparts addresses the following subparts raised in the predicate paragraph:

1) Reason the proposed site was rejected.

2) Presence of contamination, nature of contamination, and documents identifying contamination. Contamination data was gathered from Environmental Data Resources ("EDR") Database Inquiry Number: 2363195.1s, November 18, 2008.

3) Lack of usable space, usable space on the site, comparison with the minimum footprint needed for the substation utilizing a high-profile design.

4) Relocation need, need to accommodate future development plans, business that would need to relocate and/or the future development plans with which the proposed substation would conflict.

5) Purchase price, purchase price estimate, basis for the estimate.

6) Location identified by Northern States Power Company, a Minnesota corporation, ("Xcel Energy") corresponds with an alternative substation location identified by the Advisory Task Force (ATF), if so identify the alternative (G-1 through G-5, MT-28N or MT-28).

A. Western half of the Wells Fargo Home Mortgage parking lot, also referred to as site MT28S.

A1) Xcel Energy reviewed the Wells Fargo Parking lot located at 2840 4th Ave S. Minneapolis MN as a possible substation location. The space is being used as a shuttle parking lot for Children's Hospital and is located just west of a frontage road which is adjacent to I-35W and between 28th Street E and the Greenway. This space is large enough to accommodate either the Midtown North or the Midtown South substation designs. Detailed design and engineering was not done.

This site was rejected because when compared to the Midtown North or Midtown South sites the Wells Fargo parking lot has the following issues:

- Potential freeway road salt and road carbon contamination issues: Since prevailing winds blow from the West we are concerned that airborne road salt and road carbon contamination from I-35W may deposit on the substation equipment and cause equipment corrosion and electrical equipment flashovers. These could lead to equipment damage and prolonged electrical outages as Xcel Energy has experienced during mid-winter ice storms at other substations adjacent to freeways including Parkers Lake and Dayton's Bluff. In trying to mitigate these problems, Xcel Energy's maintenance costs have been considerable at both of these substations. A wind study such as the one the University of Minnesota did for Parkers Lake Substation would be needed. Remedies include a more expensive wall and/or salt barrier system, more expensive equipment and insulators (i.e. higher BIL, resistance graded, hydrophobic coatings, or polymer).

- Future freeway expansion issues: Given the close proximity of this proposed substation location to the freeway Xcel Energy is concerned that should the freeway be widened by the future addition of more lanes or light rail, I-35W would effectively move closer to the substation. The reduced space between the freeway and the substation would mean that road salt and road carbon contamination could become more severe and whatever working solution

we had for this problem may no longer work. This is what happened at the Parkers Lake Substation 10-15 years ago.

- More land would need to be purchased in comparison with the proposed Midtown North site since Xcel Energy already owns a large portion of the site and a large portion of the site not owned by Xcel Energy is vacant.
- More expensive transmission line costs: The transmission line length from the Hiawatha site to the Wells Fargo parking lot would be 0.6 miles longer and cost approximately $810,000 more.
- More expensive distribution line costs: New distribution ROW and exits would be required since the Wells Fargo site is boxed in on the West by I-35W and on the North and East by the Wells Fargo Campus versus existing Xcel Energy distribution ROW at the proposed Midtown substation sites. The proposed Midtown sites are closer to the load center for this area, therefore shorter distribution lines would be needed.

A2) Soil contamination has not been identified at this location as of November, 2008.

A3) This site has sufficient space to accommodate the Midtown North or the Midtown South configuration.

A4) When this site was evaluated it was being used as a shuttle parking lot for Children's Hospital.

A5) The purchase price of this site has not been investigated, has not been estimated, and is unknown.

A6) This location, Wells Fargo Home Mortgage parking lot, was initially considered by Xcel Energy and corresponds to an alternative identified by the Advisory Task Force as MT-28S.

B. Interstate 35W park, to the west of Interstate 35, just south of 28th Street;

B1) Xcel Energy reviewed the I-35W park, to the west of Interstate 35, just south of 28th Street as a possible substation location. The space is being used as a City of Minneapolis Park & Recreation Board children's playground and is located between 2801 Stevens Ave S. and I-35W. The site does not appear to be large enough to accommodate either the proposed Midtown North or the Midtown South substation designs. Detailed design and engineering was not done.

This site was rejected because when compared to the proposed Midtown North or Midtown South sites this park area on the west side of I-35W has:

- Future freeway expansion issues: This proposed substation location is adjacent to the I-35W freeway. Xcel Energy has not investigated the setbacks required for I-35W in the area of the proposed site and is concerned that this site is partially within the setbacks.
- More land would need to be purchased in comparison with the proposed Midtown North site. At the proposed Midtown North site, Xcel Energy already owns a large portion needed land and the rest is either vacant or condemned.
- More expensive transmission line costs: The transmission line length from the Hiawatha site to the I-35 W parking lot would be approximately 0.6 miles longer and cost approximately $810,000 more.

- More expensive distribution line costs: The I-35W park site is boxed in on the East by I-35W and the majority of the electrical load Xcel Energy is trying to serve with the proposed Midtown substation is on the East side of I-35W. The proposed Midtown sites described in the Application are closer to the load center for this area, therefore shorter distribution lines would be needed. The proposed Midtown sites are adjacent to existing Xcel Energy distribution ROW.

B2) Soil contamination has not been identified at this location as of November, 2008.

B3) This site does not have sufficient space to accommodate the proposed Midtown North or the Midtown South configuration.

B4) When this site was evaluated it was being used as a City of Minneapolis Park & Recreation Board children's playground.

B5) The purchase price of this site has not been investigated, has not been estimated, and is unknown. The site appears to be operated by City of Minneapolis Park & Recreation Board, but its ownership has not been determined.

B6) This location, Interstate 35W park, to the west of Interstate 35, just south of 28th Street, was considered by Xcel Energy until it was determined to be inadequate due to size. This location does not correspond to any of the sites identified in the question (or by the ATF).

C. Vacant land near 26th Street and Minnehaha Avenue; also referred to as G1

C1) Xcel Energy reviewed the vacant land near 26th Street and Minnehaha Ave. located at 2600 Minnehaha Ave. as a possible substation location. The space is currently vacant.

This site is rejected because the space is not large enough to accommodate the high profile Hiawatha substation design. Due to lack of space, detailed design and engineering was not done.

C2) Soil contamination has not been identified at this location as of November, 2008.

C3) This site does not have sufficient space to accommodate the Hiawatha low profile design and does not appear to have sufficient space for the high profile configuration.

C4) When this site was evaluated it was vacant.

C5) The purchase price of this site has not been investigated, has not been estimated, and is unknown.

C6) This location, vacant land near 26th Street and Minnehaha Avenue, was originally considered by Xcel Energy until it was determined to be inadequate due to size and corresponds to an alternative identified by the Advisory Task Force as G1.

D. Former Xcel Energy Hiawatha Substation Site north of 32nd Street combined with vacant land owned by Mn/DOT; also referred to as G4

D1) Xcel Energy Hiawatha Substation Site north of 32nd Street combined with vacant land owned by Mn/DOT was reviewed as a possible substation location. The site is not large enough to accommodate either the Hiawatha low profile or high profile designs. Detailed design and engineering was not done.

D2) Soil contamination has not been identified at this location as of November, 2008.

D3) This site does not have sufficient space to accommodate the Hiawatha low profile or high profile configuration.

D4) The former Xcel Energy Hiawatha Substation Site is currently not being used and the adjacent site appears to be vacant and used for overflow light rail parking.

D5) The purchase price of this site has not been estimated, and is unknown. Xcel Energy still owns the land of the former Hiawatha distribution substation, however the additional vacant land next to it is owned by Mn/DOT and would need to be purchased by a public entity prior to Xcel Energy's purchase.

D6) The former Xcel Energy Hiawatha Substation Site north of 32nd Street combined with vacant land owned by Mn/DOT was considered by Xcel Energy until it was determined to be inadequate due to size. It corresponds to the site identified as G4.

Response By:	Edward Smith
Title:	Principal Specialty Engineer
Department:	Substation Design
Date:	10/15/09