Xcel Energy

Hiawatha Project

Northern States Power Company

Application to the Minnesota Public Utilities Commission for a Route Permit

Full Permitting Process
MPUC Docket No. E002/TL-09-38
April 24, 2009

NORTHERN STATES POWER COMPANY
APPLICATION TO THE
PUBLIC UTILITIES COMMISSION
FOR A
ROUTE PERMIT

HIAWATHA
PROJECT

Full Permitting Process
MPUC Docket No. E002/TL-09-38

APRIL 24, 2009

Table of Contents

Page

1.0 Executive Summary 1

1.1 Xcel Energy and the Hiawatha Project 1

1.2 The Hiawatha Project is Necessary to Meet Increasing Demand in Area 1

1.3 Full Permitting Process 2

1.4 Overhead or Underground Design is a Key Issue in This Proceeding 2

1.5 Preferred Route A 5

1.6 Route Width 6

1.7 Requested Action 6

1.8 Next Steps 6

1.9 Completeness Checklist 6

2.0 Introduction 9

2.1 Statement of Ownership 9

2.2 Permittee 9

2.3 Certificate of Need is Not Required, But Need is Important Consideration 10

2.4 Route Permit, Full Permitting Process 10

2.5 Notice to Local Governmental Units 10

3.0 Project Information 11

3.1 Project Location 11

3.2 Project Proposal 11

3.2.1 Project Description 11

3.2.2 Route Width 15

3.2.3 Project Need 15

3.3 Project Schedule 17

3.4 Project Costs 17

3.4.1 Overall Project Costs 17

3.4.2 Special Considerations for Undergrounding Construction Costs 18

3.5 Operations and Maintenance 20

4.0 Route Development, Substation Site Selection, Detailed Route Descriptions and Rationale for Preferred Route A 21

4.1 Route Development Process 21

Table of Contents
(continued)

Page

4.2 Substations ... 24
4.2.1 Hiawatha West—Preferred Site ... 24
4.2.2 Hiawatha East—Alternative Site ... 27
4.2.3 Midtown North—Preferred Site ... 29
4.2.4 Midtown South—Alternative Site ... 31
4.3 Transmission Line Routes ... 33
4.3.1 Route A—Preferred Route ... 33
4.3.2 Route B—Alternate Route ... 35
4.3.3 Route C—Alternate Route ... 37
4.3.1 Route D—Alternate Route ... 38
4.4 Design Options to Accommodate Future Expansion ... 41
4.5 Route Alternative Comparison ... 41
5.0 Engineering Design, Construction and Right-of-Way Acquisition ... 42
5.1 Overhead Transmission Lines ... 42
5.1.1 Overhead Design, Routes A, B and C ... 42
5.1.2 Overhead Transmission Right-of-Way Evaluation and Acquisition ... 49
5.1.3 Overhead Transmission Construction Procedures ... 50
5.1.4 Overhead Transmission Restoration Procedures ... 52
5.1.5 Overhead Transmission Maintenance Procedures ... 53
5.2 Underground Transmission Facilities, Routes A and D ... 53
5.2.1 Underground Transmission Right-of-Way Evaluation and Acquisition ... 59
5.2.2 Underground Transmission Construction Procedures ... 59
5.2.3 Underground Transmission Restoration Procedures ... 60
5.2.4 Underground Transmission Maintenance Procedures ... 61
6.0 Transmission Line Characteristics ... 63
6.1 Electric and Magnetic Fields ... 63
6.1.1 Electric Fields ... 66
6.1.2 Magnetic Fields ... 67
6.2 Stray Voltage ... 68

Table of Contents
(continued)

Page

6.3 Vehicle Use and Metal Buildings Near Power Lines 68

7.0 Environmental Information 70

7.1 Description of Environmental Setting 70

7.2 Human Settlement 71

7.2.1 Public Health and Safety 71

7.2.2 Commercial, Industrial, Residential Land Use 71

7.2.3 Displacement 76

7.2.4 Noise 76

7.2.5 Television and Radio Interference 79

7.2.6 Aesthetics 80

7.2.7 Socioeconomic 82

7.2.8 Cultural Values 83

7.2.9 Recreation 84

7.2.1 Public Services 85

7.3 Land-Based Economics 87

7.3.1 Agriculture, Forestry and Mining 87

7.3.2 Tourism 87

7.4 Archaeological and Historic Resources 87

7.4.1 Cultural Resource Assessment 87

7.4.2 Architectural Resources 89

7.4.3 Archaeological Resources 92

7.5 Natural Environment 94

7.5.1 Air Quality 94

7.5.2 Water Resources 95

7.5.3 Flora 96

7.5.4 Fauna 97

7.6 Rare and Unique Natural Resources 98

7.7 Comparison of Environmental Considerations for Alternatives 100

8.0 Agency Involvement, Public Participation and Required Permits and Approvals 108

Table of Contents
(continued)

Page

8.1 Agency Contacts 108
8.1.1 Hennepin County 108
8.1.2 Hennepin County Regional Rail Authority 108
8.1.3 City of Minneapolis 109
8.1.4 Community Organizations 110
8.1.5 Minnesota SHPO 111
8.1.6 Minnesota Department of Transportation 111
8.1.7 Minnesota Department of Natural Resources 111
8.1.8 Metropolitan Council 112
8.2 Minnesota State Legislators 112
8.3 Identification of Land Owners 112
8.4 Public Participation 112
8.5 Required Permits and Approvals 113
8.5.1 State of Minnesota Permits 114
8.5.2 Local Permits 114
9.0 References 116
10.0 Definitions 118
11.0 Acronyms 119

LIST OF TABLES

Table 1 Completeness Checklist....7
Table 2 Project Location....11
Table 3 Proposed Project Schedule....17
Table 4 Project Costs....18
Table 5 Route A, Double Circuit Structure Design Summary....45
Table 6 Route B and Route C, Single Circuit Structure Design Summary....48
Table 7 Calculated Electric Fields (kV/m) for Proposed 115 kV Transmission Line Designs (1 Meter or 3.28 feet above ground)....67
Table 8 Calculated Magnetic Flux Density (milligauss) for Proposed 115 kV Transmission Line Designs (1 meter or 3.28 feet above ground)....69
Table 9 Land Use Designations....72
Table 10 Known or Suspected Contaminated Sites....74
Table 11 Common Noise Sources and Levels....77
Table 12 Noise Standards by Noise Area Classification....78
Table 13 Population and Economic Characteristics....82
Table 14 Average Residential Assessed Property Values....83
Table 15 Cultural Resources Potentially Impacted by Route and Substation Alternatives....89
Table 16 National and Minnesota Ambient Air Quality Standards....94
Table 17 Number of Trees To Be Removed/Significantly Impacted....97
Table 18 Rare and Unique Resources....99
Table 19 Comparison of Route Alternatives....101
Table 20 Potentially Required Permits....114

LIST OF FIGURES

Figure 1 Four Proposed Routes, Routes A-D 5
Figure 2 Four Proposed Routes, Routes A-D 14
Figure 3 Hiawatha West Photograph #1 25
Figure 4 Hiawatha West Photograph #2 25
Figure 5 Hiawatha West Layout 27
Figure 6 Hiawatha East Photograph #1 28
Figure 7 Hiawatha East Photograph #2 28
Figure 8 Hiawatha East Layout 29
Figure 9 Midtown North Layout 31
Figure 10 Midtown South Layout 32
Figure 11 Route A 115 kV Double Circuit Route, Overhead and Underground 34
Figure 12 Route B 115 kV Single Circuit Overhead Transmission Lines 36
Figure 13 Route C 115 kV Single Circuit Overhead Structures 39
Figure 14 Route D 115 kV Double Circuit 115 kV Underground Facilities 40
Figure 15 Double Circuit Tangent Structure 43
Figure 16 Double Circuit Dead-End Structure 44
Figure 17 Single Circuit Tangent Structure 46
Figure 18 Single Circuit Dead-End 90 Degree Corner Structure 47
Figure 19 Subgrade Foundation 48
Figure 20 Underground 115 kV Single Circuit Construction Trench Bracing 55
Figure 21 Underground Duct Section 56
Figure 22 Underground Cable Vault 57
Figure 23 Bicycle Paths and Transmission Facilities in the 7-County Metropolitan Area 86

LIST OF APPENDICES

Appendix A Notice to Local Governmental Units
Appendix B Maps
- B.1 Project Location Map
- B.2 Route A (29th Street/HCRRA Overhead Design) Route Maps
  - B.2.1 Map 1 of 4
  - B.2.2 Map 2 of 4
  - B.2.3 Map 3 of 4
  - B.2.4 Map 4 of 4
- B.3 Route A (29th Street/HCRRA Underground Design) Route Maps
  - B.3.1 Map 1 of 4
  - B.3.2 Map 2 of 4
  - B.3.3 Map 3 of 4
  - B.3.4 Map 4 of 4
- B.4 Route B (26th Street/28th Street Overhead Design) Route Maps
  - B.4.1 Map 1 of 8
  - B.4.2 Map 2 of 8
  - B.4.3 Map 3 of 8
  - B.4.4 Map 4 of 8
  - B.4.5 Map 5 of 8
  - B.4.6 Map 6 of 8
  - B.4.7 Map 7 of 8
  - B.4.8 Map 8 of 8
- B.5 Route C (28th Street/31st Street Overhead Design) Route Maps
  - B.5.1 Map 1 of 9
  - B.5.2 Map 2 of 9
  - B.5.3 Map 3 of 9
  - B.5.4 Map 4 of 9
  - B.5.5 Map 5 of 9
  - B.5.6 Map 6 of 9
  - B.5.7 Map 7 of 9
  - B.5.8 Map 8 of 9
  - B.5.9 Map 9 of 9
- B.6 Route D (28th Street Underground Design) Route Maps
  - B.6.1 Map 1 of 4
  - B.6.2 Map 2 of 4
  - B.6.3 Map 3 of 4
  - B.6.4 Map 4 of 4
- B.7 Hiawatha Substation Plans
- B.8 Midtown Substation Plans
- B.9 Zoning Maps
  - B.9.1 Central Neighborhood Zoning Map
  - B.9.2 Corcoran Neighborhood Zoning Map
  - B.9.3 Longfellow Neighborhood Zoning Map
  - B.9.4 Phillips Neighborhood Zoning Map
  - B.9.5 Powderhorn Park Neighborhood Zoning Map
  - B.9.6 Seward Neighborhood Zoning Map

B.10 Minneapolis Land Use
B.11 FEMA Floodplain Map
B.12 Topographic Map
B.13 NWI Map
B.14 Rare Features Map
B.15 Bicycle Paths and Transmission Facilities in the 7-County Metropolitan Area
Appendix C Rejected Substation Alternatives
Appendix D Project Need
Appendix E Cultural Resource Assessment
Appendix F Contaminated Sites Database Search
Appendix G Stakeholder Comments
Appendix H List of Adjacent Landowners, Routes A-D
Appendix I Cost Assumptions
Appendix J Agency Contacts

1.0 EXECUTIVE SUMMARY

1.1 XCEL ENERGY AND THE HIAWATHA PROJECT

Northern States Power Company, a Minnesota corporation ("Xcel Energy" or the "Company"), submits this application ("Application") for a Route Permit to the Minnesota Public Utilities Commission ("Commission") to construct two new distribution substations and two 115 kilovolt ("kV") transmission lines in south Minneapolis, in an area known as the Midtown District ("Hiawatha Project" or "Project"). The Hiawatha Project is necessary to serve the increasing electrical demands of Xcel Energy's customers in south Minneapolis and will help tie the distribution system in south Minneapolis more tightly to the overall electrical system. The Project will increase the capacity of the electrical distribution delivery system and improve the reliability of the power supply to residences and businesses in south Minneapolis. The estimated total cost for the Project, depending on route and transmission line design (overhead or underground), is between $28.4 million and $41.8 million. Construction is expected to begin in second quarter 2010 and be completed by third quarter 2011.

Xcel Energy recognizes that the Hiawatha Project involves routing transmission facilities through an urban area, south Minneapolis, and that this proposal raises important and challenging policy questions for the Commission and affected stakeholders. In developing its proposal, Xcel Energy has worked proactively with stakeholders to address their concerns as much as possible. In part because of those efforts, Xcel Energy has included four separate alternative routes and five design options for consideration in this proceeding. Xcel Energy is committed to continuing to work with stakeholders to address additional concerns and looks forward to further discussions on the most appropriate route for the Hiawatha Project. The Commission will have an opportunity to consider the differing interests raised in the discussion prior to making its final route decision for the Hiawatha Project.

1.2 THE HIAWATHA PROJECT IS NECESSARY TO MEET INCREASING DEMAND IN AREA

The Hiawatha Project is necessary to meet growing demand for electricity in south Minneapolis caused by population growth, increased load density and economic development in the area resulting from major revitalization efforts in the Midtown District in spite of current economic conditions. The growth in demand for power has resulted in an increasing number of feeder circuit overloads and service interruptions in the south Minneapolis area over the past decade. Xcel Energy Distribution Planning Department ("Distribution Planning") engineers determined that typical distribution mitigation strategies, such as extending feeder circuits, reconfiguring feeder circuits and adding new feeder circuits, have been exhausted and are no longer capable of addressing overloads and maintaining adequate voltage to ensure reliable local electric service. Distribution Planning also determined that existing distribution substations in south Minneapolis do not have the available capacity necessary to alleviate the overload conditions. During the pre-application process for this

Project, many individuals requested additional information about the need for the Project. In response to these requests, Xcel Energy has included detailed need data, including distribution and transmission engineering study work, in the appendices to this application (See Appendix D).

The Hiawatha Project was designed to address the distribution system problems that exist in south Minneapolis (See Section 3.2.3 and Appendix D). The Project consists of two new 115/13.8 kV distribution substations equipped with smart substation technologies, two 115 kV transmission lines and two new taps of the existing Elliot Park – Southtown 115 kV transmission line. The two substations are the Hiawatha Substation, to be located along Hiawatha Avenue near 28th Street, and the Midtown Substation, to be located in the vicinity of the former Oakland Substation at the corner of Oakland Avenue South and 29th Street. The two proposed 115 kV transmission lines, "Hiawatha No. 1" and "Hiawatha No. 2," will connect the two new substations. The taps of the Elliot Park – Southtown 115 kV transmission line will provide source electrical power to the Hiawatha Substation and the Midtown Substation for new distribution serving capacity to the community.

1.3 FULL PERMITTING PROCESS

This Application is submitted under the Full Permitting Process. This process requires a significant amount of procedure to ensure that the Project neighbors, local governments and other interested stakeholders have ample opportunity to become involved in the process if they want to participate. The applicable statutes and rules require Xcel Energy to provide at least two proposed routes for a project and state a preference for one of the proposed routes. Xcel Energy proposes four routes in this proceeding in an effort to provide the Commission with maximum optionality in making a decision.

1.4 OVERHEAD OR UNDERGROUND DESIGN IS A KEY ISSUE IN THIS PROCEEDING

The proposed routes and construction design proposals were developed using the important factors that govern route selection and significant input from the public and local governmental units. In its analysis, the Company placed emphasis on such factors as minimizing impacts to human settlement, minimizing the potential for construction challenges, locating the facilities in close proximity to the Midtown District area, where increasing electrical demand is greatest, and maximizing the efficient use of financial resources. The Company also followed the State's policy of "non-proliferation" of infrastructure corridors which establishes a strong preference for locating new transmission line facilities along existing public rights-of-way including transmission line rights-of-way and transportation rights-of-way. *See People for Environmental Enlightenment and Responsibility (PEER), Inc. v. Minnesota Environmental Quality Council*, 266 N.W.2d 858, 868 (Minn. 1978).

The Company recognizes that the relevant factors related to route selection are not subject to mechanical application and that consideration of those factors could lead to different outcomes depending upon how much weight is given to each of them. Xcel Energy believes that the current proposal will allow interested stakeholders to consider the factors and analysis proposed by Xcel

Energy, as well as to suggest changes or refinements based on their own analysis. It is entirely expected that if parties apply different priorities to the factors, different conclusions about where the facilities should be constructed could result. The Company further acknowledges that there is significant interest in constructing the facilities underground. The issue of whether the facilities should be undergrounded to minimize aesthetic impacts raises important cost considerations. Xcel Energy respects the stakeholders' preference for underground facilities and has been proactively meeting with Minneapolis city council members and Hennepin County officials to identify potential options to address how to cover the incremental cost of underground construction. The Company encourages all stakeholders to actively participate in the routing process to fully develop the record on this important policy issue. Ultimately, the Commission will take all of the information provided in this proceeding and will make a decision that best satisfies all of the factors, taken as a whole and in light of the entire record.

Xcel Energy proposes four route and five design options in this Application for consideration by the Commission. Of the design options, three are overhead and two are underground. Xcel Energy also identifies two locations for the Hiawatha Substation and two locations for the Midtown Substation. They are described below:

- Route A: Route A is a 1.4-mile route that can be constructed overhead or underground. The transmission lines would connect at the Hiawatha West substation site and parallel the 29th Street/Hennepin County Regional Rail Authority ("HCRRA" or "Midtown Greenway") corridor for approximately 1.4 miles to the Midtown North substation site. If constructed overhead, the transmission line would be built with galvanized steel single pole, double circuit structures. The estimated transmission line cost for construction of the two transmission lines along this route using an overhead configuration is $3.0 million. The estimated transmission line cost for constructing the transmission lines using underground construction along this route is $15.6 million.
- Route B: Route B is proposed as an overhead street route that would require construction of two single circuit lines because there is insufficient clearance for double circuit structures. Galvanized steel single circuit single pole structures would be used. One of the transmission lines would follow 26th Street between the Hiawatha West and Midtown North substation sites. The second line would follow East 28th Street. On both streets, the arms of the poles would be cantilevered over the roadway. The estimated route lengths of the two lines are 1.8 and 1.4 miles. The cost for construction of the transmission facilities along this route is estimated to be $5.0 million.
- Route C: Route C is also proposed as an overhead street route that would require construction of two single circuit lines because there is insufficient clearance for double circuit structures. Galvanized steel single circuit single pole structures would be used. One of the transmission lines would follow East 28th Street between the Hiawatha West and Midtown North substation sites. The second line would parallel 31st Street. Both would use a cantilever pole configuration. The estimated route lengths of the two lines are 1.5 and 2.3 miles. The estimated cost for construction of the transmission facilities along this route is $5.8 million.

- Route D: Route D is proposed as a 1.5-mile underground route along East 28th Street. This route is designed for a double circuit 115 kV transmission line between the Hiawatha West and Midtown North substation sites. The estimated transmission line costs for construction of the underground transmission facilities along this route is $16.4 million.
- Hiawatha Substation: "Hiawatha West" is located on the east side of Hiawatha Avenue (Minnesota State Highway 55) slightly south of the intersection of Hiawatha Avenue and East 28th Street. Currently this site is an open area owned by the Minnesota Department of Transportation ("Mn/DOT"). Therefore, no business relocation would be needed for construction of the substation. The estimated cost for construction on the preferred Hiawatha West substation site is $14.3 million. "Hiawatha East" is located on adjacent land to the northeast. Currently, the site contains a warehouse occupied by Crew that would need to be relocated.
- Midtown Substation: "Midtown North" is located on the northwest corner of Oakland Avenue South and 29th Street. Construction costs for the substation at this preferred site is estimated to be $11.1 million. At this time, the site is occupied by the old Xcel Energy Oakland Substation, a condemned triplex and an open lot. "Midtown South" is located on the southwest corner of Oakland Avenue South and 29th Street. The site contains the Brown Campbell warehouses that would need to be relocated for construction of the substation.

Figure 1 shows routes A-D.

FIGURE 1
FOUR PROPOSED ROUTES, ROUTES A-D

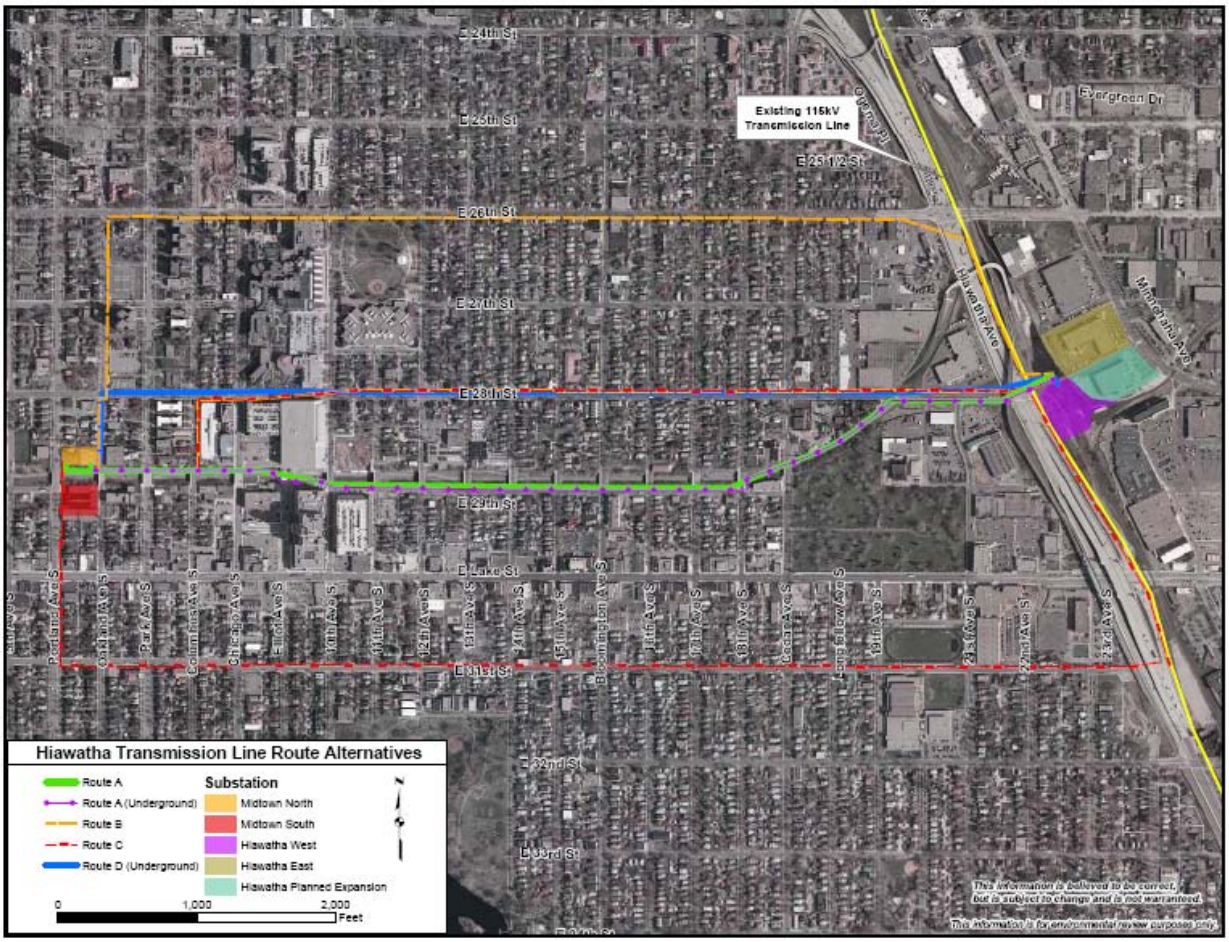

1.5 PREFERRED ROUTE A

The rules require that Xcel Energy state a "preferred" route in its application to the Commission. The preferred route is Route A between the Hiawatha West and Midtown North substation sites. Xcel Energy is proposing Route A as the preferred route for several reasons. Route A follows an existing transportation corridor and minimizes overall impacts. Route A would also enable consolidation of the two new lines on a single structure aboveground or within two adjacent duct banks in a single excavation underground on the most direct route between the two substations,. This results in fewer line miles of new transmission right-of-way ("ROW" or "right-of-way") and the least cost. Route A is also located along existing public rights-of-way and impacts the fewest landowners of all the overhead alternatives. The Company has been working proactively on underground payment options with local units of government in response to stakeholder interest in underground construction.

1.6 ROUTE WIDTH

The requested route width for Route A is 125 feet to accommodate placement of the double circuit structures overhead or in underground duct banks on either side of 29th Street. If Route B or C is selected, an 80-foot route width is requested for the single circuit structures. For option D, an 80-foot route width is requested to accommodate double circuit underground duct banks on either side of the street. Route D is only viable when underground design is used.

1.7 REQUESTED ACTION

Xcel Energy respectfully requests that the Commission grant a Route Permit for construction of the Hiawatha Project. Based on the data presented in this Application, Xcel Energy believes that Route A complies with the applicable standards and properly balances the Commission's routing criteria. Construction of the Hiawatha Project will support State goals to conserve resources, minimize environmental and human settlement impacts and land use conflicts, and ensure the State's electric energy security through the construction of efficient, cost-effective infrastructure.

1.8 NEXT STEPS

The Commission will determine whether this Application is complete and, if so, refer the matter to the Office of Administrative Hearings. An administrative law judge will preside at proceedings designed to develop a full and complete record on the Application and on all issues raised by stakeholders and will make a recommendation to the Commission on whether the Route Permit should be issued and what route should be used. As part of the routing proceeding, the Minnesota Department of Commerce, Office of Energy Security, Energy Facility Permitting Staff ("OES") will prepare an Environmental Impact Statement ("EIS"). The administrative law judge's recommendation and the EIS will be forwarded to the Commission for consideration in making its decision.

1.9 COMPLETENESS CHECKLIST

The content requirements for an application with the Commission under the Full Permitting Process are identified in Minnesota Rules 7849.5200 and 7849.5220. The rule requirements are listed on Table 1 with references indicating where the information can be found in this Application.

TABLE 1
COMPLETENESS CHECKLIST

Authority	Required Information	Where
Minn. R. 7849.5220, Subp. 2	Site Permit for HVTL	
A.	a statement of proposed ownership of the facility at the time of filing the application and after commercial operation;	2.1
B.	the precise name of any person or organization to be initially named as permittee or permittees and the name of any other person to whom the permit may be transferred if transfer of the permit is contemplated;	2.2
C.	at least two proposed routes for the proposed high voltage transmission line and identification of the applicant's preferred route and the reasons for the preference;	4.3, 4.5
D.	a description of the proposed high voltage transmission line and all associated facilities including the size and type of the high voltage transmission line;	3.2, 4.2, 4.3, 5.1, 5.2
E.	the environmental information required under Minn. R. 7849.5220, Subp. 3;	See Minn. R. 7849.5220, Subp.3 (A)-(H) below.
F.	identification of land uses and environmental conditions along the proposed routes;	Chapter 7.0
G.	the names of each owner whose property is within any of the proposed routes for the high voltage transmission line;	8.3 and Appendix H
H.	United States Geological Survey topographical maps or other maps acceptable to the commission showing the entire length of the high voltage transmission line on all proposed routes;	Appendix B
I.	identification of existing utility and public rights-of-way along or parallel to the proposed routes that have the potential to share right-of-way with the proposed line;	4.3 and Appendix B
J.	the engineering and operational design concepts for the proposed high voltage transmission line, including information on the electric and magnetic fields of the transmission line;	5.1, 5.2 and 6.1
K.	cost analysis of each route, including the costs of constructing, operating, and maintaining the high voltage transmission line that are dependent on design and route;	3.4, 3.5, 5.1 and 5.2
L.	a description of possible design options to accommodate expansion of the high voltage transmission line in the future;	4.4
M.	the procedures and practices proposed for the acquisition and restoration of the right-of-way, construction, and maintenance of the high voltage transmission line;	5.1 and 5.2

Authority	Required Information	Where
N.	a listing and brief description of federal, state, and local permits that may be required for the proposed high voltage transmission line;	8.5
O.	a copy of the Certificate of Need or the certified HVTL list containing the proposed high voltage transmission line or documentation that an application for a Certificate of Need has been submitted or is not required.	2.3
Minn. R. 7849.5220, Subp. 3	Environmental Information	
A.	a description of the environmental setting for each site or route;	7.1
B.	a description of the effects of construction and operation of the facility on human settlement, including, but not limited to, public health and safety, displacement, noise, aesthetics, socioeconomic impacts, cultural values, recreation, and public services;	7.2
C.	a description of the effects of the facility on land-based economies, including, but not limited to, agriculture, forestry, tourism, and mining;	7.3
D.	a description of the effects of the facility on archaeological and historic resources;	7.4
E.	a description of the effects of the facility on the natural environment, including effects on air and water quality resources and flora and fauna;	7.5
F.	a description of the effects of the facility on rare and unique natural resources;	7.6
G.	identification of human and natural environmental effects that cannot be avoided if the facility is approved at a specific site or route;	See all of effects described in Chapter 7.0
H.	a description of measures that might be implemented to mitigate the potential human and environmental impacts identified in items A to G and the estimated costs of such mitigative measures.	See all of the mitigative measures identified in Chapter 7.0

2.0 INTRODUCTION

2.1 STATEMENT OF OWNERSHIP

Northern States Power Company is a Minnesota corporation with its headquarters in Minneapolis, Minnesota. The Company is a wholly-owned subsidiary of Xcel Energy Inc., a utility holding company with its headquarters in Minneapolis. The Company provides electricity services to approximately 1.2 million customers and natural gas services to 425,000 residential, commercial and industrial customers in the State. The Company also provides electricity service to more than 73,000 customers in South Dakota and 55,000 customers in North Dakota. The Company will construct, own, operate and maintain the new Hiawatha and Midtown substations and the two new 115 kV transmission lines connecting the new substations. Xcel Energy Services Inc. is the service company for the Xcel Energy Inc. holding company system, and its personnel, *inter alia,* prepare, submit and administer regulatory applications to the Commission on behalf of the Company, including route permit applications.

2.2 PERMITTEE

The permittee for the Project is:

Permittee: Northern States Power Company

Contact: RaeLynn Asah
Permitting Analyst, Siting & Land Rights - North

Address: Xcel Energy Services Inc.
250 Marquette Ave
Minneapolis, MN 55401

Phone: (612) 330-6512

Email: raelynn.asah@xcelenergy.com

2.3 CERTIFICATE OF NEED IS NOT REQUIRED, BUT NEED IS IMPORTANT CONSIDERATION

Minnesota Statute Section (§) 216B.243, subdivision 2 states that no large energy facility shall be sited or constructed in Minnesota without the issuance of a Certificate of Need by the Commission. A large energy facility is defined to include transmission lines between 100 kV and 200 kV if they are more than 10 miles long (*See* Minnesota Statutes § 216B.2421, subd. 2(2) and (3)). The 115 kV transmission lines proposed for the Project do not qualify as a large energy facility because they are less than 10 miles in length. Therefore, a Certificate of Need is not required for the proposed Project.

Although a Certificate of Need is not statutorily required, Xcel Energy is including detailed information about the need that prompted the Hiawatha Project proposal in response to public comments received during the pre-application process. The need for the Project is presented in Section 3.2.3, and Appendix D includes the supporting engineering analysis. This data is included to ensure that stakeholders have the opportunity to review and understand the engineering justification for the Project. Throughout the routing proceeding, Xcel Energy anticipates that additional information about the need will be sought and the Company will work with all interested parties to provide available data.

2.4 ROUTE PERMIT, FULL PERMITTING PROCESS

Minnesota Statutes § 216E.03, subdivision 2 provides that no person may construct a high voltage transmission line ("HVTL") without a route permit from the Commission. An HVTL is defined as a transmission line of 100 kV or more and greater than 1,500 feet in length in Minnesota Statutes § 216E.01, subdivision 4. The two 115 kV transmission lines proposed here are HVTLs and therefore a route permit is required prior to construction.

Minnesota Statutes § 216E.03 and Commission rules describe route permitting requirements. This Application is submitted pursuant to the provisions of the Full Permitting Process outlined in Minnesota Rules 7849.5200 to 7849.5340.

2.5 NOTICE TO LOCAL GOVERNMENTAL UNITS

The Company provided notification to the City of Minneapolis, Hennepin County, the HCRRA, and the Metropolitan Council by letters dated October 29, 2008, that the Company intended to apply for a route permit for the Project with the Commission. These letters comply with the requirement of Minnesota Statutes § 216E.03, subdivision 3a. Copies of these letters are located in Appendix A.

3.0 PROJECT INFORMATION

3.1 PROJECT LOCATION

The proposed Project is located in south Minneapolis, Minnesota in Hennepin County, in the following neighborhoods, townships, ranges and sections. The project map located in Appendix B.1 identifies the overall Project Area. The townships and neighborhoods affected are shown in Table 2.

TABLE 2
PROJECT LOCATION

Neighborhood	Township (N)	Range (W)	Sections
Central	28	24	2, 3
Corcoran	28	24	1
Longfellow	29	24	36
Phillips	29	24	35, 36
Powderhorn Park	28	24	2
Seward	29	24	36

3.2 PROJECT PROPOSAL

3.2.1 PROJECT DESCRIPTION

The Project is designed to provide additional electrical system capacity in the south Minneapolis area to serve the increasing demand for power. The Project includes construction of two new substations in south Minneapolis and two new 115 kV lines connecting the substations. The specific facilities are:

- A new Hiawatha Substation, approximately 2.25 acres;
- A new Midtown Substation, approximately 1 acre; and
- Two new 115 kV transmission lines connecting the two substations. These two lines will create a 115 kV "loop" between the substations. The total length of the routes for the lines will depend on the specific route selected, ranging from 1.4 miles for a double circuit or underground configuration to 3.7 miles for single circuit configuration (requiring two separate routes).

3.2.1.1 HIAWATHA SUBSTATION

The Hiawatha Substation will be approximately 2.25 acres in size. The preferred site for the substation is the "Hiawatha West" location on the east side of Hiawatha Avenue (Minnesota State Highway 55) north of the intersection of Hiawatha Avenue and East 28th Street. The preferred location is currently open land owned by Mn/DOT. The alternate location is the "Hiawatha East" site situated on adjacent land to the northeast. Currently the Hiawatha East location is occupied by a warehouse, which would need to be relocated. The Hiawatha West location will include the following facilities:

- A prefabricated concrete wall approximately 12 feet high with a non-tag friendly design appropriate to the area along the north, west and south sides of the substation to limit graffiti;
- Landscaping around the north, east and south sides;
- A chain-link fence, gate and driveway along the east sides of the substation;
- Four 115 kV transmission line dead-end structures and related substation equipment and structures (an additional three dead-end structures would be required to connect two of the lines into the correct electrical position in the substation, and one for transformer termination);
- One 50 mega voltampere ("MVA"), 118-14.4 kV, Load Tap Changer ("LTC") distribution transformer;
- One switchgear enclosure containing six 13.8 kV distribution feeders with associated equipment; and
- One electrical equipment enclosure containing all electrical controls, protective relaying and auxiliary equipment for the operation of the substation.

There is an identified area for the planned expansion of the substation (See Figure 2). Such expansion area would be used to accommodate additional transmission facilities if future conditions warrant. Xcel Energy is not proposing to construct facilities in this expanded area as part of this Application.

3.2.1.2 MIDTOWN SUBSTATION

The Midtown Substation will be approximately 1 acre in size. The preferred substation site is the "Midtown North" location on the northwest corner of Oakland Avenue South and 29th Street. A condemned triplex, the old Xcel Energy Oakland Substation and open space currently occupy the Midtown North site. The Midtown North location would not require any business relocation. The alternate substation site is the "Midtown South" location on the southwest corner of Oakland Avenue South and 29th Street, currently occupied by the Brown Campbell warehouses which would

need to be relocated if the Midtown South location were chosen. The Midtown North location will include the following facilities:

- A prefabricated concrete wall with a non-tag friendly design appropriate to the area along the north, east, west and south sides of the substation;
- Landscaping on the south, east and west sides as practical;
- A chain-link gate and driveway on the east and west sides of the substation;
- Two 115 kV, transmission line, steel, box structures and related substation equipment and structures;
- One 70 MVA, 118-14.4 kV, LTC distribution transformer; and
- One electrical equipment enclosure initially containing nine, 13.8 kV distribution feeders with associated equipment, all electrical controls, protective relaying, and auxiliary equipment for the operation of the substation.

3.2.1.3 ROUTE A—PREFERRED ROUTE FOR OVERHEAD AND UNDERGROUND DESIGN

Route A begins on the east side at the Hiawatha Substation, Hiawatha West location. Route A then crosses Hiawatha Avenue, and continues parallel to East 28th Street, near the Minneapolis Pioneers and Soldiers Memorial Cemetery and heads west along 29th Street for approximately 1.4 miles. The lines would connect to a new Midtown Substation at the Midtown North location in the vicinity of the former Oakland Substation at the corner of Oakland Avenue South and 29th Street.

There are two design options for the transmission facilities. The first option, and the most cost effective design, is overhead construction using single-pole, double circuit 115 kV structures. The second, alternative option is to place the structures underground in a duct system.

3.2.1.4 ROUTE ALTERNATIVES

There are three route alternatives proposed in this Application, Routes B-D. Routes B and C are designed for overhead construction. Route D is designed for underground transmission lines.

- Route B: Route B is a street route that would require construction of two single circuit above ground lines because there is insufficient clearance for double circuit structures. One of the transmission lines would follow 26th Street between the Hiawatha West and Midtown North substation sites. The second line would follow East 28th Street between the substations.
- Route C: Route C is also a street route that would require construction of two single circuit overhead lines because there is insufficient clearance for double circuit structures. One of the transmission lines would follow East 28th Street between the Hiawatha West and Midtown North substation sites. The second line would parallel 31st Street.

- Route D: Route D is along East 28th Street. This route proposal includes an underground double circuit 115 kV transmission line between the Hiawatha West and Midtown North substation sites.

In developing these alternatives, Xcel Energy reviewed the Project Area for transmission line and substation locations. All transmission line alternatives identified in the Project Area are included as proposed route alternatives in this application; no other routes were seriously considered. Various substation locations were rejected because they are not suitable for the Project. These other substation alternatives are described in Appendix C.

Figure 2 shows the four proposed routes. The route alignment depicted in the figure is a best estimate. Final alignment will be adjusted to accommodate field conditions as needed.

FIGURE 2
FOUR PROPOSED ROUTES, ROUTES A-D

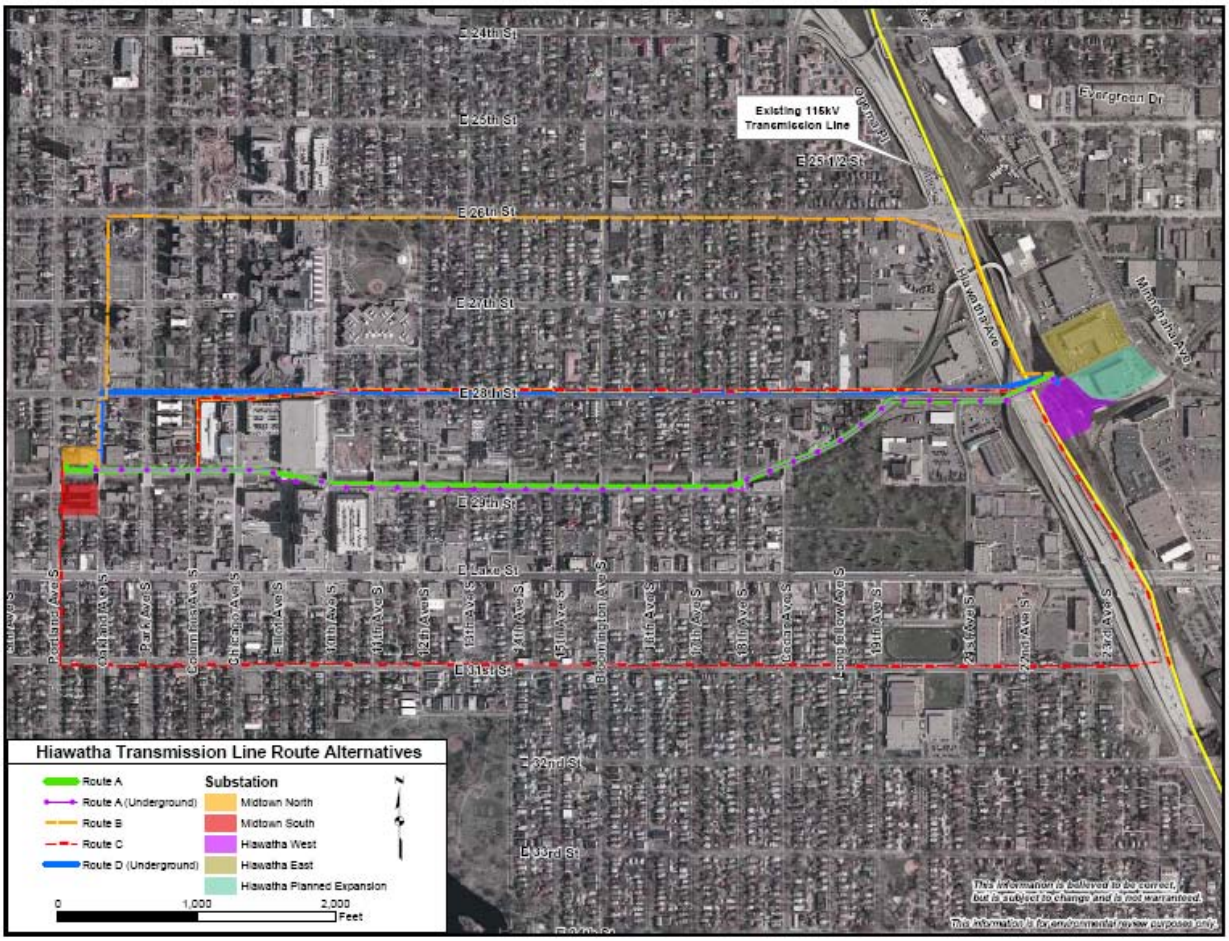

3.2.2 ROUTE WIDTH

The Power Plant Siting Act, Minnesota Statutes Chapter 216E ("PPSA"), directs the Commission to locate transmission lines in a manner that "minimize[s] adverse human and environmental impact while ensuring continuing electric power system reliability and integrity and ensuring that electric energy needs are met and fulfilled in an orderly and timely fashion." Minn. Stat. § 216E.02, subd. 1. The PPSA further authorizes the Commission to meet its routing responsibility by designating a "route" for a new transmission line when it issues a Route Permit. *Id.* A route may have "a variable width of up to 1.25 miles," within which the right-of-way for the facilities can be located. Minn. Stat. § 216E.01, subd. 8.

For this Project, Xcel Energy requests varying route widths for each of the proposed routes. If a Route Permit is issued for Route A, Xcel Energy requests that a route width of 125 feet be authorized to provide flexibility in constructing the facilities overhead on either side of 29th Street using either overhead or underground design. If overhead Route B or C is approved, Xcel Energy requests a route width of 80 feet. If the Commission issues a Route Permit for Route D, which is designed for underground facilities, Xcel Energy requests a route width of 80 feet.

3.2.3 PROJECT NEED

Customer electricity usage has grown significantly over the past decade in south Minneapolis and is expected to continue to grow. This growth has been particularly dramatic along and around Lake Street and Hiawatha Avenue due to revitalization and redevelopment efforts. This area includes the Abbott Northwestern Hospital, Anderson Open Elementary School, Midtown Medical, a hotel, condominiums, commercial and industrial buildings and a shopping center. Planning reports issued by the City of Minneapolis planning department describe City plans to facilitate continued large-scale redevelopment in the south Minneapolis area over the next several years. Current and future redevelopment is concentrated along Lake Street and the Hiawatha Light Rail Transit corridors and in areas adjacent to those corridors (*e.g.*, Midtown Exchange, Abbott Northwestern Hospital, and Minneapolis Children's Hospital).

In response to an increasing number of feeder circuit overloads and service interruptions on the distribution delivery system in the south Minneapolis area over the past decade, Xcel Energy's Distribution Planning engineers conducted a long-term study of the south Minneapolis distribution delivery system (See Appendix D).

Distribution Planning analyzed the existing distribution system capacity in south Minneapolis by evaluating historical load data and load forecasts for 39 feeder circuits that serve distribution load in an area of south Minneapolis that has been experiencing the most severe overload conditions in past years ("Focused Study Area") and for the 15 distribution substation transformers that serve

distribution load in the greater South Minneapolis area ("Greater Study Area"). Distribution Planning determined that there exists today a deficit of approximately 55 megawatts ("MW") in the Focused Study Area. By 2018, this deficit is expected to increase to 74 MW, resulting in more frequent feeder overloads of longer duration. Distribution Planning determined that the areas that are experiencing the greatest need, *i.e.*, where overloading and outages are most common, are in and around Lake Street between Interstate 35W and the Mississippi River and Hiawatha Avenue, between Interstate 94 and the Crosstown Highway 62 where high-density housing, commercial and industrial land use and redevelopment has and continues to be concentrated. Forecast data for 2009 to 2028 indicate that the overloading problems, including the shortening of equipment life, brief outages or service interruptions, and power surges, will increase over time absent additional distribution system capacity.

To address this need, Distribution Planning reviewed potential distribution system improvements (including adding new feeder circuits, extending existing feeder circuits and reconfiguring feeder circuits) and concluded that these options have been exhausted and would not provide the necessary system support. Distribution Planning also determined that existing distribution substations in south Minneapolis do not have the available capacity necessary to alleviate the overload conditions. Distribution Planning concluded that two new distribution sources (*i.e.*, substation transformers) were needed to ensure adequate system support in the Hiawatha and Midtown areas in the near term.

Distribution Planning, in coordination with the Xcel Energy Transmission Planning Department ("Transmission Planning"), developed four electrical system options that would provide additional distribution substation transformers for the Project area. All four options addressed how to best serve the existing distribution load and potential future electrical system upgrades that may be needed to meet future load growth in the Focused Study Area. Planning engineers also considered several other alternatives to meeting the need, including a no-build option, conservation and demand side management programs, generation (including distributed renewable generation), smart grid substation technologies and cogeneration. More information regarding these alternatives can be found in Appendix D.

Ultimately, both Distribution Planning and Transmission Planning determined that the option that best addressed both the immediate and long-term needs for electricity in the south Minneapolis area included the addition of two new distribution substations in the Hiawatha and Midtown areas, with both substations tapping the existing Elliot Park - Southtown 115 kV transmission line and two new looped 115 kV transmission lines connecting the two new substations. Phase one of the proposed configuration will provide an additional 120 MW of load serving support in the south Minneapolis area. This additional capacity will meet the immediate distribution system needs and provide support for further demand growth in the area. As demand for power grows, the capacity of the system can

be further expanded by adding transformers and feeder circuits at the two substations. In addition, the proposed Hiawatha Substation could be expanded in the future to accommodate additional transmission facilities, potentially a 345 kV line, if necessary to meet community load-serving needs.

3.3 PROJECT SCHEDULE

The Project has a target in-service date of third quarter, 2011. The schedule for construction of the Project is shown in Table 3 below:

TABLE 3
PROPOSED PROJECT SCHEDULE

Task	Timing
Route Permit	1st Quarter 2009 – 2nd Quarter 2010
Other State and Local Permits	2nd Quarter 2010
Preconstruction Activities	
Survey	2nd Quarter 2010
ROW Acquisition	2nd –3rd Quarter 2010
Equipment/Materials Acquisition	2nd-3rd Quarter 2010
Construction	
Transmission	3rd Quarter 2010 – 2nd Quarter 2011
Substations	3rd Quarter 2010 – 2nd Quarter 2011
Project Completion	3rd Quarter 2011

This schedule is based on information known as of the date of this filing and upon planning assumptions that balance the timing of implementation with the availability of crews, materials and other practical considerations. This schedule may be subject to adjustment and revision as further information is developed.

3.4 PROJECT COSTS

3.4.1 OVERALL PROJECT COSTS

The cost of the Project includes materials, construction, right-of-way acquisition and Project management. The estimated cost of the Project, depending on the route ultimately selected, is shown in Table 4. Substation costs shown are for the proposed substations at the Hiawatha West and Midtown North sites.

TABLE 4
PROJECT COSTS

Route Alternative	Hiawatha Substation Costs	Midtown Substation Costs	115 kV Transmission Line Costs	Total Cost
Route A (29th Street/HCRRA Corridor)				
Double Circuit Overhead Design	$14,270,000	$11,120,000	$3,000,000	$28,390,000
Underground Design	$14,270,000	$11,120,000	$15,600,000	$40,990,000
Route B (26th Street/28th Street) Single Circuit Overhead Design	$14,270,000	$11,120,000	$5,000,000	$30,390,000
Route C (28th Street/31st Street) Single Circuit Overhead Design	$14,270,000	$11,120,000	$5,750,000	$31,140,000
Route D (28th Street) – Underground Design	$14,270,000	$11,120,000	$16,400,000	$41,790,000

3.4.2 Special Considerations for Undergrounding Construction Costs

The costs of placing transmission lines underground are significantly higher than the standard construction practice of placing the facilities overhead. The incremental cost of undergrounding can be five times the cost of overhead construction, or more, depending upon the specific conditions encountered. In addition, underground transmission facilities present some special operational and maintenance challenges that generally make undergrounding less desirable unless site-specific reasons or regulatory requirements override the use of standard construction practices. As a result of these challenges, Xcel Energy typically constructs underground transmission facilities only when (i) requested, and paid for, by a customer/municipality; or (ii) when necessary to address specific physical constraints or regulatory requirements. Notably, of the 7,300 miles of HVTLs in Xcel Energy's five-state upper-Midwest region, only about 12 miles are currently constructed underground in areas such as in downtowns or near airports.

Xcel Energy understands the concerns about the potential aesthetic impacts overhead transmission lines could create, and Xcel Energy wants to be responsive to local and municipal concerns. As a result, as part of this Application, Xcel Energy included two underground design options for consideration, in addition to three lower cost overhead options. By providing all of these options for consideration, Xcel Energy seeks to provide the Commission and stakeholders with the information necessary to analyze and compare the available options as well as assess the cost implications of those options.

As noted in Table 4 of this Application, the incremental increased cost of the underground options is significant. The costs for standard overhead construction range from $3.0 to $5.8 million. The costs for underground construction are estimated to be between $15.6 and$16.4 million. Since typical overhead construction is feasible in this circumstance, this Project presents an important opportunity for the Commission to consider whether undergrounding is appropriate and the proper allocation of the cost differential between overhead and underground design. Ultimately, the Commission will need to balance the socioeconomic/aesthetic impacts of overhead transmission facilities against the increased cost of underground transmission facilities and, as part of that balance, will need to determine who bears the increased costs incurred to minimize the socioeconomic/ aesthetic impacts.

Utility customers and municipalities often request that non-standard or "special" facilities be constructed to address specific concerns or to obtain specific outcomes. For example, real estate developers often request that distribution service lines be placed underground in new residential developments. Xcel Energy's tariff provisions allow for flexibility in this regard. Xcel Energy will accommodate special customer requests, provided that the special request is feasible and the customer(s) agree to pay the cost of the special request. These tariff provisions are found at Section 5.3 of Chapter 6 of Xcel Energy's Minnesota Electric Rate Book ("Tariff").

Generally transmission infrastructure improvements are paid for by Xcel Energy and the entire customer base and users of the transmission system. In the case of special transmission facilities, the tariff provides the Commission latitude in how it allocates the incremental costs. Under Xcel Energy's Tariff, customers or a municipality may require or request that Xcel Energy install new transmission facilities or modify or relocate existing transmission facilities. If a facility constitutes a special facility under the tariff (*e.g.*, an underground facility), the Tariff requires that Xcel Energy calculate the incremental cost of the special facility to determine the "excess expenditure" to be paid by the requesting party. The municipality has the option to pre-pay the additional cost or make other arrangements for payments over time. If the municipality does not arrange to pay for the excess expenditures or if the request comes from some other source, the Tariff contemplates that Xcel Energy will seek approval of the Commission for the allocation of excess expenditures to the customers of the municipality that benefits from the special facilities (*see* Tariff Ch. 6, § 5.3(E)(2)).

While it is contemplated that the actual cost recovery decision will be made in a subsequent miscellaneous tariff proceeding, the stakeholder interest in undergrounding is expected to generate significant discussion of costs and cost allocation in this routing proceeding. Xcel Energy is committed to working with the City of Minneapolis and other stakeholders to fully explore options to cover the incremental costs of undergrounding the proposed 115 kV lines. Xcel Energy has begun direct discussions with the City of Minneapolis and Hennepin County officials to identify ways to address the additional costs. The Company will continue to seek to work with interested stakeholders to find an appropriate alternative to resolve this complex issue.

3.5 OPERATIONS AND MAINTENANCE

If an overhead alternative is selected, operating and maintenance costs for the transmission line will be nominal for several years, since the line will be new, and minimal vegetation maintenance is required. Annual operating and maintenance costs for 115 kV transmission voltages across the Company's Upper Midwest system have averaged approximately $300 to $500 per mile of transmission right-of-way over the last five years. The principal operating and maintenance cost will be inspections, which, for the overhead route alternatives, would consist of a bi-annual ground survey.

If the underground alternative is selected, it is not expected that there will be any operating and maintenance costs because it is not possible to physically inspect the facilities. However, should a fault occur, the time required to repair an underground failure is much longer and the cost is much higher than for above-ground facilities.

The Company performs periodic inspections of substations and associated equipment. The type and frequency of inspection varies depending on the type of equipment. Typical inspection intervals are semi-annually or annually. Maintenance and repair are performed on an as-needed basis, and therefore the cost varies from substation to substation.

4.0 ROUTE DEVELOPMENT, SUBSTATION SITE SELECTION, DETAILED ROUTE DESCRIPTIONS AND RATIONALE FOR PREFERRED ROUTE A

The routes proposed in this Application were developed over a period of more than a year and included substantial input from multiple meetings with landowners, lawmakers and other stakeholders. This process resulted in four transmission line route alternatives and five construction options, three overhead and two underground. In addition, Xcel Energy has developed a proposed site and alternative site for each of the two proposed substations. Route selection processes and route alternatives, beginning with substation locations, are described in detail below. The site specific construction concerns for the routes and substation alternatives are also discussed.

4.1 ROUTE DEVELOPMENT PROCESS

The route alternatives were developed by the Company's routing and engineering personnel based on their investigation of the overall project area ("Project Area"). The routing team considered the need for the facilities to be located near the Midtown District area, the location of existing distribution and transmission infrastructure, and input from the public and government entities about how to minimize impacts. Throughout the process, the Company evaluated several route alternatives, considering feedback gathered at six public open house meetings and received through written comments. Xcel Energy also consulted with local, state and federal agencies associated with the Project Area, which is defined as the area east of Interstate 35W, along and south of 26th Street, along and north of 31st Street and west of Minnehaha and 26th avenues.

To identify potential routes, Xcel Energy gathered environmental data, collected public comments and applied the factors listed in Minnesota Rule 7849.5910 (and reflected in Minnesota Statutes Section 216E.03, subdivision 7(b)).[1] The factors set forth in Minnesota Rule 7849.5910 are as follows:

A. Effects on human settlement, including, but not limited to, displacement, noise, aesthetics, cultural values, recreation and public services;

B. Effects on public health and safety;

C. Effects on land-based economies, including, but not limited to, agriculture, forestry, tourism and mining;

D. Effects on archaeological and historic resources;

[1] Two of the statutory criteria listed in Minn. Stat. 216E.03, subd. 7(b) are not directly reflected in the factors listed in Minn. R. 7849.5910, Minn. Stat. 216E.03, subd. 7(b)(7) (evaluation of route alternatives) and (12) (consideration of issues raised by other agencies and local entities). However, these two statutory factors are addressed in Sections 4.0, 7.0 and 8.0 of the Application.

E. Effects on the natural environment, including effects on air and water quality resources and flora and fauna;

F. Effects on rare and unique natural resources;

G. Application of design options that maximize energy efficiencies, mitigate adverse environmental effects and could accommodate expansion of transmission or generating capacity;

H. Use or paralleling of existing rights-of-way, survey lines, natural division lines and agricultural field boundaries;

I. Use of existing large electric power generating plant sites;

J. Use of existing transportation, pipeline and electrical transmission systems or rights-of-way;

K. Electrical system reliability;

L. Costs of constructing, operating and maintaining the facility which are dependent on design and route;

M. Adverse human and natural environmental effects which cannot be avoided; and

N. Irreversible and irretrievable commitments of resources.

When applying these factors, the Company placed emphasis on minimizing impacts to human settlement, minimizing the potential for construction challenges, locating the facilities in close proximity to the geographic area of need, and cost-effectiveness. The Company also followed the State's policy of non-proliferation of infrastructure corridors which establishes a strong preference for locating new transmission line facilities along existing public rights-of-way, including transmission line rights-of-way and transportation rights-of-way. *See People for Environmental Enlightenment and Responsibility (PEER), Inc. v. Minnesota Environmental Quality Council*, 266 N.W.2d 858, 868 (Minn. 1978).

The first step in the route development process was an analysis of environmental resources in the Project Area using computer mapping of data, including aerial photographs and topographic maps. The following is a summary of resources used to complete the environmental analysis:

- Aerial photography was obtained from the Minnesota Land Management Information Center;
- City of Minneapolis, zoning and parcel data, location of trees;
- The United States Department of Agriculture ("USDA") was consulted for soil data;
- Federal Emergency Management Agency ("FEMA") for floodplain information;

- The Minnesota Department of Natural Resources ("MnDNR") records were consulted for information on native plant communities, sites with biodiversity significance, streams and lakes, wildlife management areas and rare natural features;
- The United States Fish and Wildlife Service ("USFWS") National Wetlands Inventory ("NWI") was used to assess for the potential presence of wetlands in the Project Area;
- The Minnesota State Historic Preservation Office ("SHPO") database and files were accessed for the existence of sites within the Project Area that have historic or archaeological significance and for past surveys of the Project Area;
- The Minneapolis Heritage Preservation Commission ("HPC") database and files were accessed for the existence of sites within the Project Area that have historic or archaeological significance and for past surveys of the Project Area;
- A site-specific cultural resource assessment was completed to provide additional information regarding existing and potential cultural resources in the Project Area (See Appendix E); and
- A database search was completed to provide information regarding existing or potential environmental contamination in the Project Area (See Appendix F).

From this review, the routing team identified preliminary route segments. See Appendices B.2 through B.6. The Company then sought input about the preliminary alternatives from the public, and state and local agencies through six open house meetings. The initial round of four open house meetings provided a general discussion of the Project and Project Area. The second round of two open house meetings presented Route A (overhead and underground design options), Routes B and C (overhead design) and Route D (underground design), as well as further details regarding substation location alternatives.

Approximately 120 people attended the first round of four open house meetings, two of which were held on October 29, 2008 and two of which were held on November 6, 2008. Comments focused primarily on the following areas:

- Concerns related to Project need;
- Transmission line and substation siting alternatives; and
- General questions about electrical transmission, including human health/Electric and Magnetic Fields ("EMF") concerns.

Approximately 70 people attended the second round of two open house meetings, both of which were held on January 15, 2009. Comments focused primarily on the following areas:

- Concerns related to Project need and the feasibility of using conservation and/or renewable energy sources to off-set future demand in the area;

- Aesthetic impacts and property values for stakeholders located near route alternatives, primarily those residents living near the Midtown Greenway;
- Human health/EMF concerns; and
- Desire to see the Project placed underground.

A copy of all comments received at the open house meetings and follow-up comments received as a result of the open house meetings are contained in Appendix G.

Based on feedback received at the public meetings and in stakeholder meetings, additional substation site alternatives were considered. These site alternatives were located by Interstate 35 and the Wells Fargo Home Mortgage complex: the Wells Fargo park, Interstate 35W park and the K-Mart property. The location of these site alternatives, along with the analysis of each site alternative, is contained in the rejected substation sites summary in Appendix C.

Based on the information gathered from the public meeting and the agencies, the Company finalized its substation sites and proposed routes as described below.

4.2 SUBSTATIONS

Xcel Energy proposes to build two new electrical substations in south Minneapolis to serve the electrical needs of the area. When investigating potential sites, Xcel Energy sought locations in close proximity to the Midtown District area to maximize the effectiveness of the proposed improvements and near the Elliott Park – Southtown 115 kV line (#0840) to facilitate the necessary interconnection. Xcel Energy also sought to identify sites that were vacant and undeveloped.

4.2.1 HIAWATHA WEST—PREFERRED SITE

The Hiawatha West substation site is an area along the existing 115 kV transmission line located between Hiawatha Avenue to the west, Minnehaha Avenue to the east, and the Soo Line Railroad to the South. The preferred site is currently an open area owned by Mn/DOT. Zimmer Davis, a light industrial warehouse, located at 2700 Minnehaha Avenue is east of the proposed site.

The proposed substation would be a low profile design with a dimension of 253 feet x 392 feet, or 2.25 acres, with the larger dimension being the North-South direction along the Hiawatha Avenue. The substation location would be surrounded on three sides (north, west and south) with an architecturally designed wall. The east side would be fenced with a chain-link gate to allow access for construction and maintenance and in keeping with the industrial character on the east side. Figure 3 and Figure 4 are photographs of the substation siting area.

FIGURE 3
HIAWATHA WEST PHOTOGRAPH #1

View of Hiawatha West substation site between Zimmer Davis property and Hiawatha Avenue facing south

FIGURE 4
HIAWATHA WEST PHOTOGRAPH #2

View of Hiawatha West substation site and back of Zimmer Davis property facing east

If the Hiawatha West substation site is selected, there will be several development requirements that will need to be addressed:

- Substation access will require an easement over the Zimmer Davis driveway on the south side of that property or on railroad property to Minnehaha Avenue.

- The proposed area for the Hiawatha Substation currently contains existing underground fiber optic cables, a fiber optic control facility, a rail spur for light rail delivery and the existing Elliot – Southtown 115 kV transmission line right-of-way. In addition, a potential bicycle path, allowances for the future extension of 28th Street to Minnehaha Avenue, and underground utility corridors for new electrical distribution lines had to be considered in the design.

Hiawatha West Layout

The preliminary substation layout for the Hiawatha West location is designed to accommodate a bike path, extension of 28th Street, underground utility corridors and a rail spur (See Figure 5). The substation at the Hiawatha West site will be connected to the proposed 115 kV transmission lines and the Elliot-Southtown 115 kV line via four 115 kV transmission line dead-end structures. The terminations will provide one connection to the existing Elliott Park Substation to the north; two connections to the new Midtown Substation to the west; and one connection to the existing Southtown Substation to the south. Figure 5 and Appendix B.7 depict the proposed site layout.

The proposed Hiawatha Substation will be a low profile design with the initial installation of the following equipment:

- A prefabricated, 12-foot high architecturally designed concrete wall, with a non-tag friendly design appropriate to the area would be located along the north, west and south sides of the substation;

- A chain-link fence along the east side and a 20-foot gate to allow access for construction and maintenance will keep with the industrial nature of the area;

- One 50 MVA, 118-14.4 LTC distribution transformer;

- One 20-foot x 40-foot electrical equipment enclosure will house all electrical control, protective relaying and auxiliary equipment; and

- Four additional group-operated switches for connection to future circuit breaker positions.

FIGURE 5
HIAWATHA WEST LAYOUT

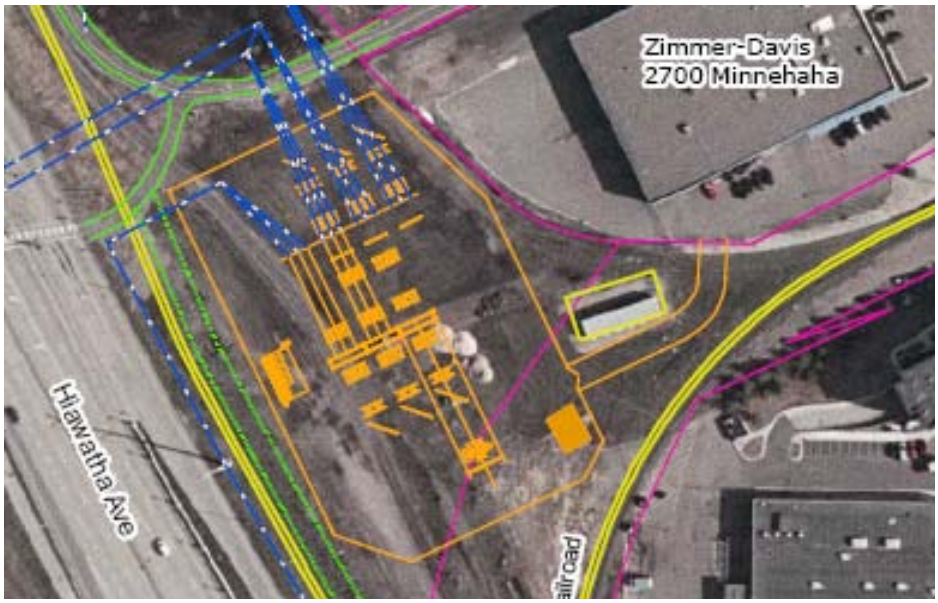

4.2.2 HIAWATHA EAST—ALTERNATIVE SITE

The alternative Hiawatha Substation location, Hiawatha East, is adjacent to the proposed site, and is located at 2650 Minnehaha Avenue (currently occupied by a light industrial business, Crew) to the northeast of the proposed site (See Figure 8). The benefits of the alternative site are similar to the proposed site and the layout of the substation would be essentially the same. The major drawback of the Hiawatha East site would be the required removal of the buildings and relocation of the Crew business. Figure 6 and Figure 7 are photographs of the current site.

FIGURE 6
HIAWATHA EAST PHOTOGRAPH #1

View of Hiawatha East Substation site looking west; front of Crew business

FIGURE 7
HIAWATHA EAST PHOTOGRAPH #2

View of Hiawatha East Substation site looking west; back of Crew business

Hiawatha East Layout

The Hiawatha Substation at the Hiawatha East site would be connected to the same transmission lines and have the same low profile design and major components as the Hiawatha West substation. The only difference is that the decorative wall will be around the east, north and west sides of the substation, while the fenced portion will be along the south side. Figure 8 shows the substation layout for the Hiawatha East site.

Key considerations with the Hiawatha East location are:

- Existing building would have to be demolished and business would have to be relocated to accommodate the substation.
- Soil contamination may require mediation.

FIGURE 8
HIAWATHA EAST LAYOUT

4.2.3 MIDTOWN NORTH—PREFERRED SITE

The preferred Midtown Substation site is the Midtown North site located on an area that includes the following property addresses: 2840 Oakland Avenue (former Xcel Energy Oakland Substation site); 2833 Portland Avenue (condemned triplex); and 2841 Portland Avenue (vacant Brown Campbell land, formerly owned by Xcel Energy). Two of these properties (2840 Oakland Ave and 2841 Portland Ave) include a 43-foot slope down to the Midtown Greenway elevation.

The proposed substation at the Midtown North location would be a high profile design with a dimension of 176 feet x 248 feet, or 1 acre, with the larger dimension being in the east-west direction along the Midtown Greenway (See Figure 9 and Appendix B.8). Assuming probable setbacks for landscaping would remain the same as at present, usable space would be 110 feet x 248 feet, or 0.63 acre. Given the site location the substation would be landscaped on the south, east and west sides as practical and walled on four sides with an architecturally pleasing design. Chain link gates on both Oakland Avenue and Portland Avenue would allow airflow for equipment cooling and access for construction and maintenance.

The Company recognizes there is interest in adding an access point to the Greenway at the proposed Midtown North substation site. In response to this interest, the Company has designed the substation wall and layout to accommodate a walkway installation along the south side of the wall.

The development requirements of the proposed Midtown North site are identified below.

- Part of the slope near the Midtown Greenway will be needed for the site and would require a retaining wall
- An abandoned and condemned triplex at 2833 Portland Avenue would have to be removed.

Midtown North Layout

The proposed Midtown Substation will be connected to the proposed 115 kV transmission lines via two 115 kV transmission line dead-end structures. Both terminations will connect to the proposed Hiawatha Substation.

The proposed Midtown Substation will be a high profile design with the initial installation of the following equipment:

- A prefabricated concrete wall with a non-tag friendly design appropriate to the area along the north, east, west and south sides of the substation;
- A chain-link gate and driveway on the east and west sides of the substation;
- Two 115 kV transmission line steel box structures and related substation equipment and structures;
- One 70 MVA, 118-14.4 kV, LTC distribution transformer;
- One electrical equipment enclosure containing 13.8 kV distribution switchgear with associated equipment; and
- All electrical controls, protective relaying and auxiliary equipment for the operation of the substation.

FIGURE 9
MIDTOWN NORTH LAYOUT

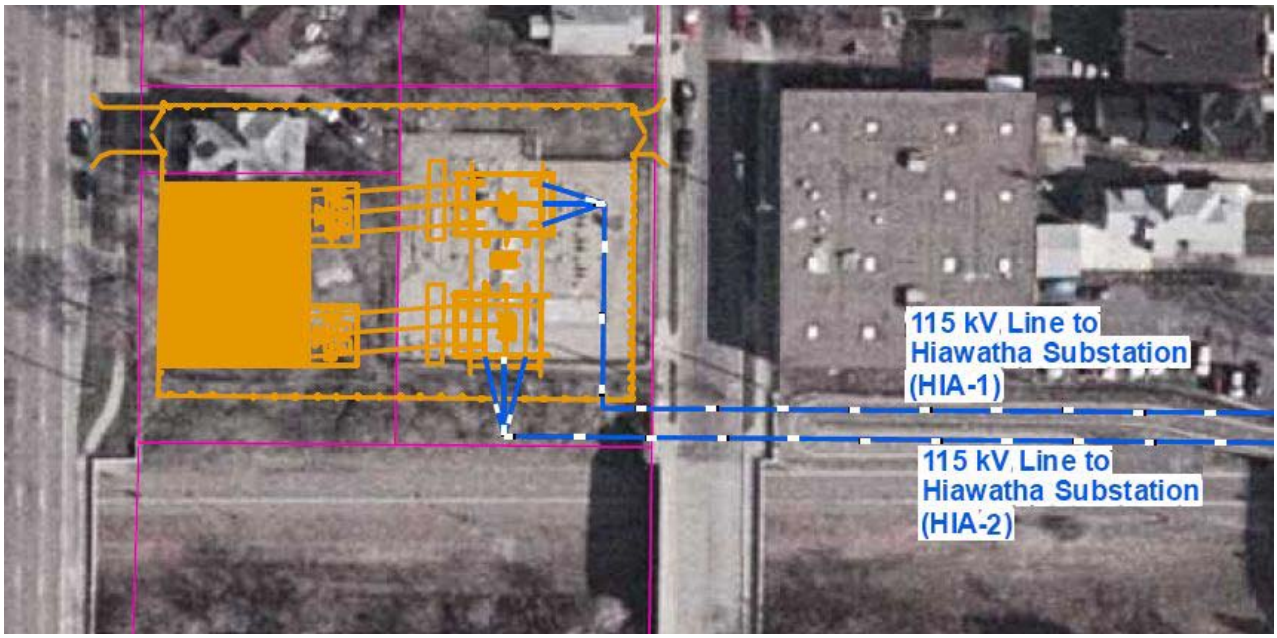

4.2.4 MIDTOWN SOUTH—ALTERNATIVE SITE

The Midtown South site is located across the HCRRA Corridor from the Midtown North site, on an area that includes 2907 Portland Avenue and 2915 Portland Avenue. Both of these properties are currently owned and occupied by Brown Campbell Enterprises.

The dimensions of the substation at the Midtown South site would be approximately 245 feet x 249 feet, or 1.4 acres with the larger dimension being in the east-west direction along the Midtown Greenway (See Figure 10). Given the site location, the substation would have 10 feet of landscaping on the east and west sides and would be walled on four sides with an architecturally pleasing design. Chain link gates on both Oakland Avenue and Portland Avenue would allow airflow for equipment cooling and access for construction and maintenance.

Key considerations associated with the Midtown South location are:

- Existing buildings would need to be demolished and the business relocated to accommodate new substation.
- Soil contamination may require mediation.

FIGURE 10
MIDTOWN SOUTH LAYOUT

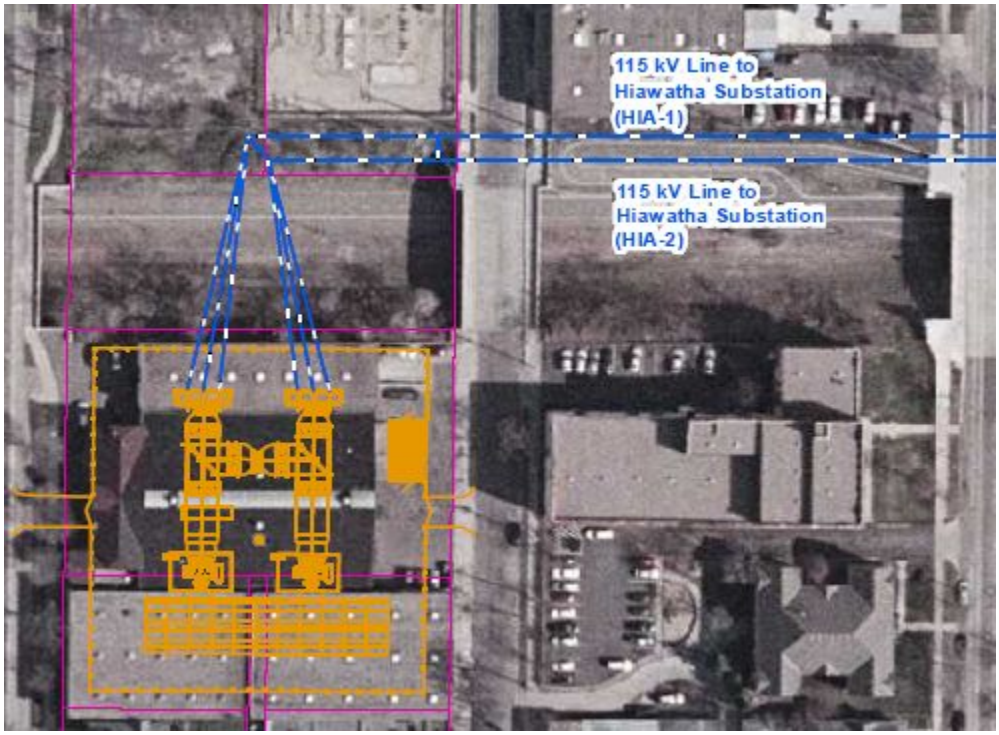

Midtown South Layout

The proposed Midtown South Substation will be a low profile design with the initial installation of the following equipment:

- A prefabricated concrete wall with a non-tag friendly design appropriate to the area along the north, east, west and south sides of the substation;
- A chain-link gate and driveway on the east and west sides of the substation;
- Two 115 kV transmission line steel box structures and related substation equipment and structures;
- One 70 MVA, 118-14.4 kV, LTC distribution transformer;
- Outdoor high profile steel box structures for the distribution transformer breaker position and feeders;
- One electrical equipment enclosure containing all electrical controls, protective relaying and auxiliary equipment for the operation of the substation.

If the Midtown South site were selected, slight modifications would need to be made to Routes A-C to tie into the substation. More significant modification to Route D would be required.

4.3 TRANSMISSION LINE ROUTES

Xcel Energy proposes four choices for a route and five design options in this Application. Route A can be constructed overhead or underground. All routes are described as connecting with the preferred sites for the Hiawatha Substation (Hiawatha West) and Midtown Substation (Midtown North). If either substation alternative is selected, the transmission line routes will need to be modified slightly to connect at the alternate sites such as if the Midtown South Substation site were selected Route A would have to cross the Greenway an additional time, and Routes B-D would be slightly longer.

4.3.1 ROUTE A—PREFERRED ROUTE

Route A is approximately 1.4 miles long between the proposed Hiawatha Substation and Midtown Substation. Route A begins on the east end at the Hiawatha Substation (Hiawatha West location). The transmission lines cross both Hiawatha Avenue and the Metro Transit Hiawatha Light Rail Line near the intersection of East 28th Street and continue west along the south side of East 28th Street. The transmission lines cross 29th Street/HCRRA Corridor, turn south, and continue along the north side of the Midtown Greenway. The transmission lines cross 29th Street/HCRRA Corridor between Cedar Avenue South and 18th Avenue South and proceed west along the south side of the Midtown Greenway and north side of East 29th Street. The transmission lines again cross the Midtown Greenway diagonally between 10th Avenue South and Elliot Avenue South and continue west along the north side the Midtown Greenway to between Oakland Avenue South and Portland Avenue South. The transmission line route ends on the west end at the proposed Midtown Substation (Midtown North location).

If Route A is selected, it is anticipated the majority of the right-of-way would be located within the HCRRA property and/or within public road rights-of-way.

4.3.1.1 ROUTE A—OVERHEAD DESIGN

There are two construction options for the 1.4-mile long Route A, a double circuit overhead option and double circuit underground option. As discussed in Section 1.4 and 3.4.2, overhead design is the most common design type constructed by Xcel Energy and the most cost effective. If overhead construction is used, both lines will be constructed on double circuit steel pole structures with a galvanized steel finish. The double circuit poles allow both Hiawatha No. 1 and Hiawatha No. 2 to be placed on one structure. If Route A and an overhead design are selected, overhead distribution lines that exist along the route will be placed underground to mitigate impacts to the Midtown Greenway corridor. Figure 11 shows Route A.

Appendix B contains more detailed maps of Route A. The segments for the Route A overhead design option are shown on the segment maps in Appendix B.2 and are identified as 1, 2, 3 and 4.

FIGURE 11
ROUTE A
115 KV DOUBLE CIRCUIT ROUTE, OVERHEAD AND UNDERGROUND

4.3.1.2 ROUTE A—UNDERGROUND DESIGN

If the underground design is selected, the two 115 kV transmission lines would be placed in a concrete duct system below 29th Street between the proposed Hiawatha and Midtown substations. Manholes would be placed periodically along the route to allow for pulling the conductors through the duct system.

Appendix B contains more detailed maps of Route A. The segments for Route A underground design option are shown on the segment maps in Appendix B.3 and are identified as 1, 2, 3 and 4.

4.3.2 ROUTE B—ALTERNATE ROUTE

Route B involves constructing two single circuit, 115 kV transmission lines between the preferred Hiawatha and Midtown substation locations (Hiawatha West and Midtown North). The Hiawatha No. 1 line would be located along 26th Street and be approximately 1.8 miles long. The Hiawatha No. 2 line would be located along 28th Street and be approximately 1.5 miles long. This route alternative requires single pole, single circuit construction because there is insufficient clearance over the buildings to accommodate a double circuit structure. To minimize the right-of-way needed for safe operation of the facilities, the single circuit lines would be cantilevered over the streets.

Hiawatha No. 1 would exit the Hiawatha Substation and proceed north along the east side of Hiawatha Avenue (the line will be double circuited with the existing Elliot Park-Southtown 115 kV line for several spans). The line would cross Hiawatha Avenue near the intersection of East 26th Street, and continue west along the south side of East 26th Street. The transmission line would then proceed south along the west side of Oakland Avenue South and end on the west end at the Midtown Substation.

Hiawatha No. 2 would exit the Hiawatha Substation, cross Hiawatha Avenue and the Metro Transit Hiawatha Light Rail Line near the intersection of East 28th Street, and continue west along the north side of East 28th Street to 10th Avenue South. The transmission line would diagonally cross East 28th Street between 10th Avenue South and Elliot Avenue South and continue west along the south side of East 28th Street. The transmission line would continue south along the west side of Columbus Avenue South and then west along the north side of 29th Street/HCRRA Corridor, ending on the west end at the Midtown Substation.

Route B is located primarily where existing overhead distribution lines parallel the streets. Where the proposed transmission line structures would be located near an existing distribution line structure, the distribution line structure would be removed and the distribution line would be supported by the new transmission line structure. Route B including the distribution underbuild structure locations are shown on Figure 12.

If Route B is selected, the transmission line facilities would be located within public road right-of-way. Figure 12 provides an overview of Route B.

FIGURE 12
ROUTE B
115 KV SINGLE CIRCUIT OVERHEAD TRANSMISSION LINES

Appendix B contains more detailed maps of the 115 kV transmission line route from the proposed Hiawatha Substation to the proposed Midtown Substation. The segments for Route B are shown on the segment maps in Appendix B.4 and are identified as 1, 2, 3, 4, 5, 6, 7 and 8.

4.3.3 ROUTE C—ALTERNATE ROUTE

Route C proposes constructing two single circuit, 115 kV transmission lines between the proposed Hiawatha and Midtown substations. The Hiawatha No. 1 line would be located along 28th Street and be approximately 1.5 miles long. The Hiawatha No. 2 line would be located along 31st Street and be approximately 2.3 miles long. This route alternative requires single pole, single circuit construction because there is insufficient clearance to accommodate a double circuit structure along either street. To minimize the right-of-way needed for safe operation of the facilities, the single circuit lines would be cantilevered over the streets.

Hiawatha No. 1 would exit the east side of the Hiawatha Substation, cross Hiawatha Avenue and the Metro Transit Hiawatha Light Rail Line near the intersection of East 28th Street, and continue west along the north side of East 28th Street to 10th Avenue South. The transmission line would diagonally cross East 28th Street between 10th Avenue South and Elliot Avenue South and continue west along the south side of East 28th Street. The transmission line would continue south along the west side of Columbus Avenue South and then west along the north side of the Midtown Greenway, ending on the west end at the proposed Midtown Substation.

Hiawatha No. 2 would exit the Hiawatha Substation to the south and travel along the east side of Hiawatha Avenue. (It would be double circuited with existing Elliot Park-Southtown 115 kV line for several spans). The transmission line would cross both Hiawatha Avenue and the Metro Transit Hiawatha Light Rail Line near the intersection with East 31st Street and then proceed west along the north side of East 31st Street. The transmission line would cross East 31st Street at the intersection of Chicago Avenue South and continue west along the south side of East 31st Street. The transmission line would then go north along the east side of Portland Avenue South. The transmission line ends on the west end at the Midtown Substation.

Route C is located primarily where existing overhead distribution lines parallel the streets. Where the proposed transmission line structures would be located near an existing distribution line structure, the distribution line structure would be removed and the distribution line would be supported by the new transmission line structure, sometimes referred to as underbuilding the distribution line. The locations of the distribution line underbuild are shown on Figure 13.

Route C would require special construction arrangements to accommodate for the narrow to non existent boulevard along 31st Street. Special structures with narrower than normal bases would be ordered for the route. At approximately eight corner or street crossing locations, larger base

structures would be necessary. Some right-of-way may need to be obtained from private landowners to accommodate for the larger structure bases.

If Route C were selected, the transmission facilities would be located within the public road right-of-way.

Figure 13 provides an overview of Route C.

Appendix B contains more detailed maps of Route C. The segments for Route C are shown on the segment maps in Appendix B.5 and are identified as 1, 2, 3, 4, 5, 6, 7, 8 and 9.

4.3.1 ROUTE D—ALTERNATE ROUTE

Route D would be constructed as an underground design. The two 115 kV transmission lines would be placed in a concrete duct system below East 28th Street between the preferred locations for the Hiawatha and Midtown substations (Hiawatha West and Midtown North). Manholes would be placed periodically along the route to allow for line placement. The transmission lines would begin on the east end at the proposed Hiawatha Substation and cross both Hiawatha Avenue and the Metro Transit Hiawatha Light Rail Line near the intersection of East 28th Street. The transmission lines would proceed west within East 28th Street, then turn and go south under Oakland Avenue South, ending on the west end at the proposed Midtown Substation.

If Route D is selected, it would be located within public road rights-of-way.

Figure 14 provides an overview of Route D.

Appendix B contains more detailed maps of Route D. The segments for Route D are shown on the segment maps in Appendix B.6 and are identified as 1, 2, 3 and 4.

FIGURE 13
ROUTE C
115 KV SINGLE CIRCUIT OVERHEAD STRUCTURES

FIGURE 14
ROUTE D
115 KV DOUBLE CIRCUIT 115 KV UNDERGROUND FACILITIES

4.4 DESIGN OPTIONS TO ACCOMMODATE FUTURE EXPANSION

The Company is proposing improvements to its electric infrastructure in south Minneapolis to improve the reliability of this area and meet increasing demand for electricity in the area spurred by a growing population, load intensification and economic growth. While no specific plans, outside of those presented in this Application, are currently available, if the historical load growth rate continues, the Company foresees the need for additional transmission infrastructure in south Minneapolis and has designed the Hiawatha Project components to meet future load needs.

The Hiawatha Substation location was chosen with sufficient space to expand the substation size to accommodate future growth in the area. The Hiawatha Substation will have capacity to accommodate an additional transmission line tie-in, as well as additional transformer and feeder lines. The Hiawatha Substation is designed for expansion to the Zimmer-Davis property, 2700 Minnehaha Avenue, should need in the south Minneapolis area continue to grow as the Company currently projects. The expansion area could accommodate a future transmission line, either 115 kV or 345 kV. While the Company's long range plans include the possibility over 10 years from now of another HVTL tie to the area, based upon the Company's current understanding of growth in the area and estimated future demand, there are no definitive plans at this point in time. Xcel Energy anticipates that plans for additional infrastructure to serve this area will continue to evolve and additional studies will be conducted to determine if there is a need for additional infrastructure. This will depend upon load growth, conservation practices and technology changes that are expected over time.

The Midtown Substation is not intended to be expanded beyond the size proposed in this Application. However, it can accommodate an additional 115 kV transmission line tie-in, as well as an additional transformer and feeder lines.

4.5 ROUTE ALTERNATIVE COMPARISON

The Company believes Route A is best suited for the Project Area as compared to the four other alternatives. A summary of the factors supporting this route are as follows:

- Environmental impacts, including impacts to trees, are minimized.
- The route minimizes length of the proposed transmission lines. Shorter length reduces overall impacts and maintains lower costs relative to other longer alternatives.
- Route A follows an existing railroad and utility corridor.
- Route A impacts the fewest homes compared to other overhead construction options.. Route A will impact 31 residential buildings. In contrast, Route B or Route C will impact 206 and 266 residential buildings respectively. All residential impacts are calculated by measuring 100 feet from the center of the proposed alignment of the routes and include buildings adjacent to substations.

A comprehensive summary of the Minnesota rule factors as applied to the four alternatives is provided at the end of Chapter 7.

5.0 ENGINEERING DESIGN, CONSTRUCTION AND RIGHT-OF-WAY ACQUISITION

5.1 OVERHEAD TRANSMISSION LINES

The proposed transmission line will be designed to meet or surpass all relevant local and state codes, the National Electric Safety Code ("NESC"), North American Electric Reliability Corporation ("NERC") requirements and Company standards. Appropriate standards will be met for construction and installation and all applicable safety procedures will be followed during and after installation.

The type of structure to be used for the Project varies depending on the route ultimately chosen. Descriptions of transmission line structure characteristics are provided below.

5.1.1 OVERHEAD DESIGN, ROUTES A, B AND C

Route A

The proposed overhead structures for Route A are galvanized, double circuit structures with davit arms (as shown in Figure 15) that will be bolted to concrete pier foundations. The conductor is proposed to be 795,000 circular mils (795 "kcmil") 26/7 Aluminum Conductor Steel Reinforced ("ACSR") per phase. At several locations the lines would cross existing and future light rail, auto and pedestrian paths. There will be custom designed structures for the current and future light rail corridors based on the field requirements at each location. These structures will look something like the dead end structures depicted in Figure 16, with an additional arm to support crossings without an additional structure. These structures have not been designed at the time of filing, but will be designed once a route decision has been made.

Depictions of tangent and dead-end double circuit structures are shown in Figure 15 and Figure 16.

FIGURE 15
DOUBLE CIRCUIT TANGENT STRUCTURE

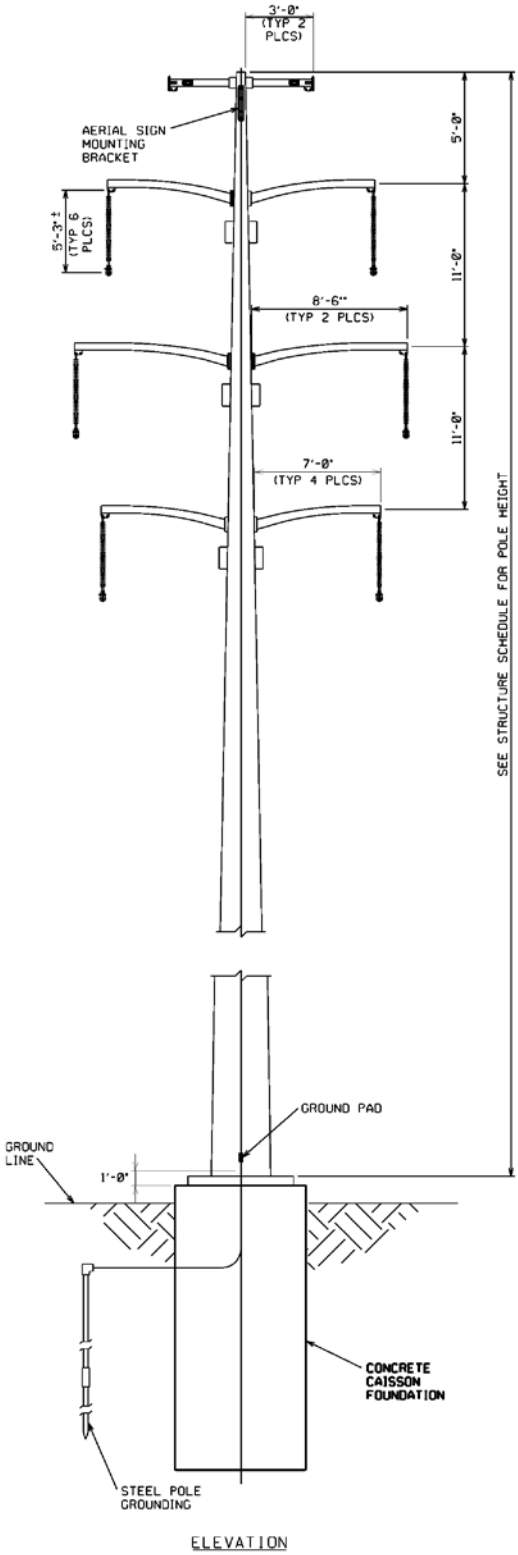

FIGURE 16
DOUBLE CIRCUIT DEAD-END STRUCTURE

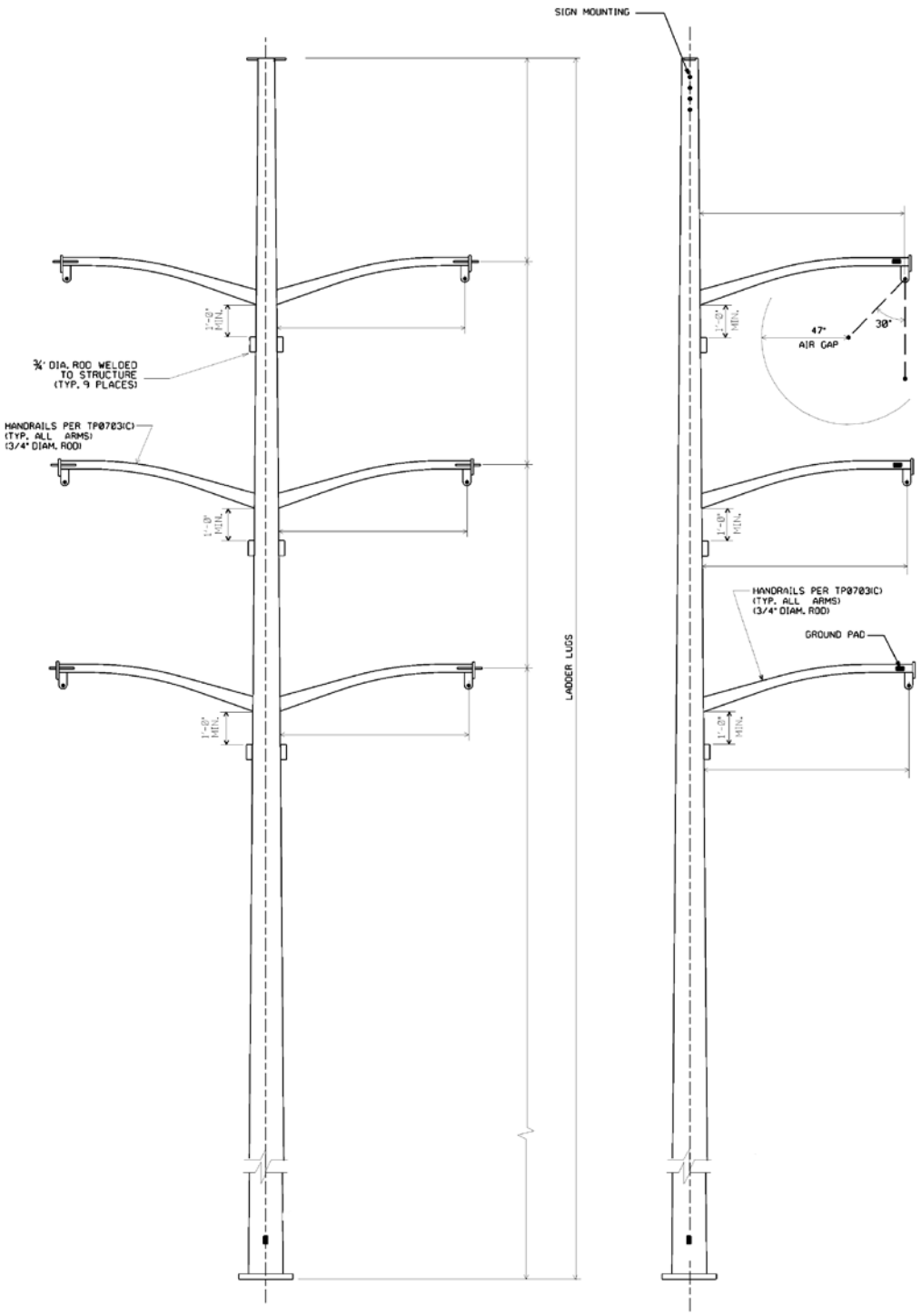

Table 5 summarizes the structure designs and foundation for Route A.

TABLE 5
ROUTE A, DOUBLE CIRCUIT STRUCTURE DESIGN SUMMARY

Project Component	Line Voltage	Structure Type	Pole Type	Conductor	Foundation	Average Span Length	Average Height	Maximum Height
Tangent	115 kV	Typical	Steel	795 kcmil 26/7 ACSR	Drilled Pier	500 feet	75 feet	110 feet
Dead-End	115 kV	Crossing	Steel	795 kcmil 26/7 ACSR	Drilled Pier and/or Driven Pile	500 feet	80 feet	115 feet

Route B and Route C

Two route alternatives, Route B and Route C, are designed for overhead construction. The majority of the proposed structures are galvanized, single circuit with davit arm and distribution underbuild fixtures. At several locations the line will cross existing and future light rail, auto and pedestrian paths. Special consideration will be given to structures used in these areas. There will be custom designs for these structures based on the requirements for each location, although they will be similar to those shown in Figure 17.

Structure foundations would be finished below grade such that the sidewalk/street curb can be finished up to the surface of the structure as shown in Figure 17. Figure 18 shows a single circuit dead-end structure and Figure 19 shows a subgrade foundation.

FIGURE 17
SINGLE CIRCUIT TANGENT STRUCTURE
(Also depicts direct embedded steel pole installation)

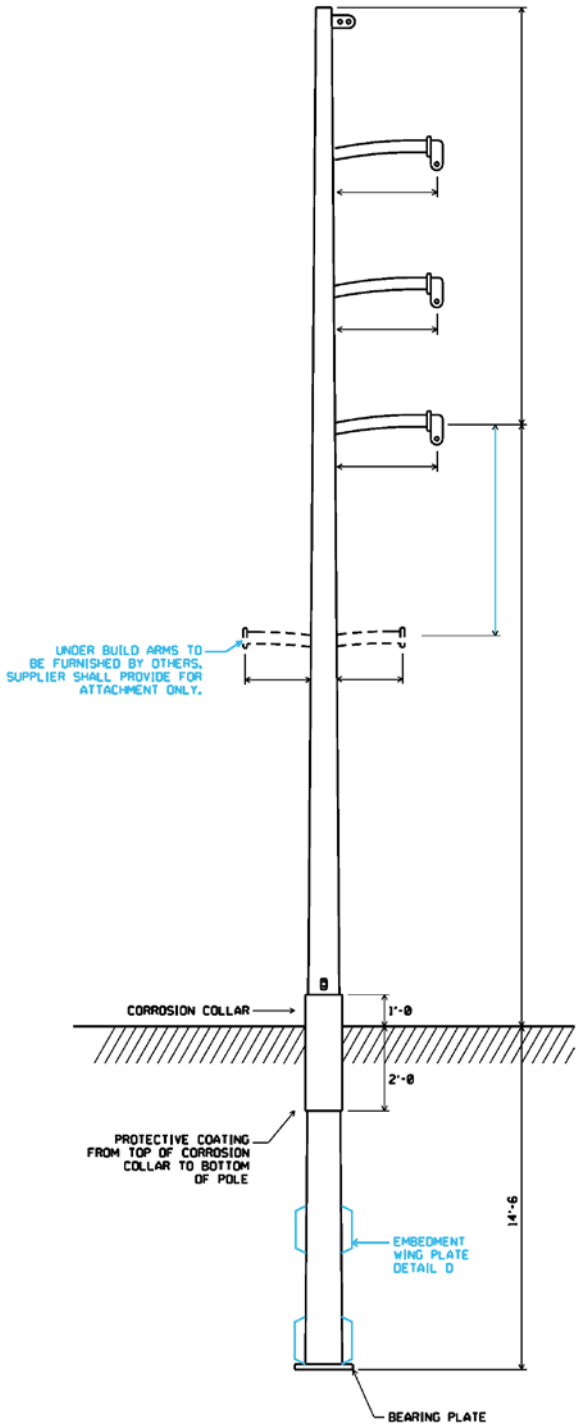

FIGURE 18
SINGLE CIRCUIT DEAD-END 90 DEGREE CORNER STRUCTURE

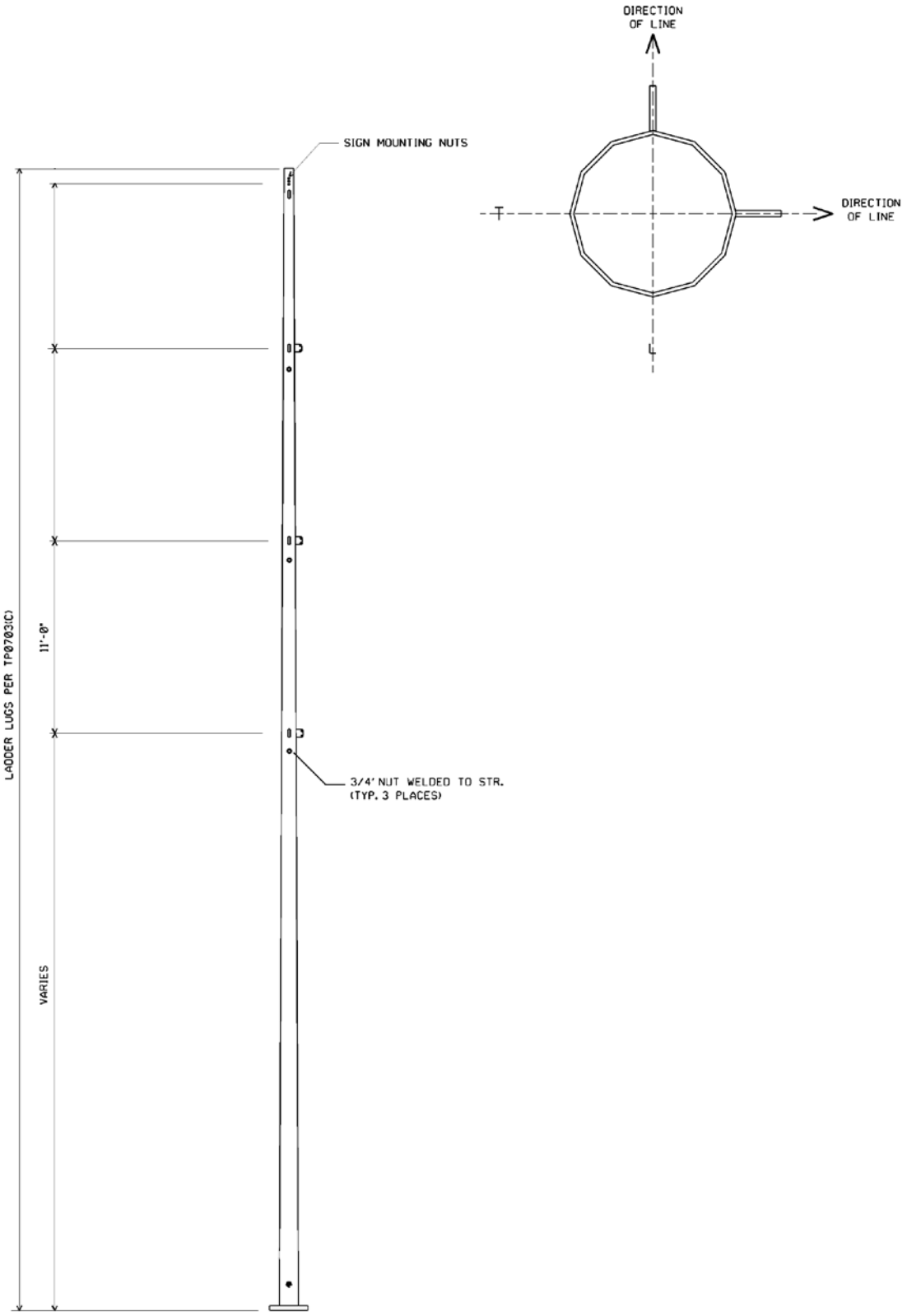

FIGURE 19
SUBGRADE FOUNDATION

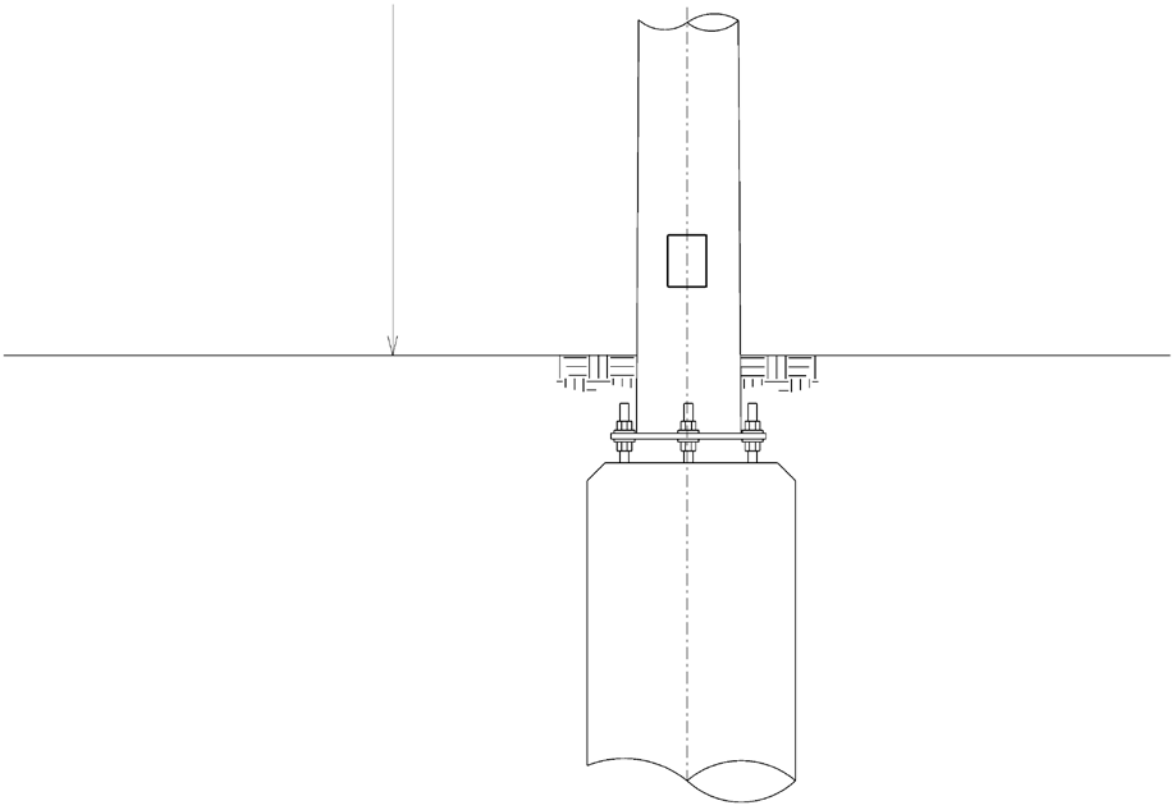

Table 6 summarizes the structure and foundation designs for the line:

TABLE 6
ROUTE B AND ROUTE C, SINGLE CIRCUIT STRUCTURE DESIGN SUMMARY

Project Component	Line Voltage	Structure Type	Pole Type	Conductor	Foundation	Average Span Length	Average Height
Tangent	115 kV	Typical	Steel	795 kcmil 26/7 ACSR	Drilled Pier and/or Direct Imbed	500 feet	75 feet
Dead-End	115 kV	Crossing	Steel	795 kcmil 26/7 ACSR	Drilled Pier	500 feet	100-110 feet

5.1.2 OVERHEAD TRANSMISSION RIGHT-OF-WAY EVALUATION AND ACQUISITION

If the proposed facilities are constructed on an overhead double circuit 115 kV transmission line structures, a 50-foot wide right-of-way, located 25 feet each side of the transmission structure centerline, will be required. The overhead single circuit 115 kV transmission line designs will also require a 50-foot wide right-of-way,. The underground designs will require a 30-foot right-of-way. When the line is adjacent to a street, the line will share the existing road right-of-way; an easement of lesser width will be required from the landowner depending on road configuration and structure requirements.

For those portions of the Project that will be constructed on public land, Xcel Energy will coordinate with the appropriate agency to obtain the necessary approvals to construct the facilities. Xcel Energy anticipates working closely with the City of Minneapolis, the HCRRA and Mn/DOT throughout this permitting process and after a Route Permit is issued.

Where private land rights need to be acquired, the right-of-way acquisition process begins early in the detailed design process. For transmission lines, utilities typically acquire easement rights across the parcels to accommodate the facilities. The evaluation and acquisition process includes initial owner contacts, survey work, document preparation, negotiation and purchase of the easement. Each of these activities, particularly as it applies to easements for transmission line facilities, is described in more detail below.

After owners are identified, a right-of-way representative personally contacts each property owner or the property owner's representative. The right-of-way agent describes the need for the transmission facilities and how the specific project may affect each parcel. The right-of-way agent also seeks information from the landowner about any specific construction concerns. Also, at this contact, the right-of-way representative will request permission for survey and soil boring information to be performed on the property in order to design the facility and prepare plans for the landowner. Surveys are conducted to locate the right-of-way corridors, natural features, man-made features and associated elevations for use during the detailed engineering of the line. The soil analysis is performed by an experienced geotechnical testing laboratory. This contact is typically made after a route permit is issued for a project, but may occur earlier in some instances.

The right-of-way agent then negotiates with the property owner(s) to acquire the easement rights necessary to build, operate and maintain the transmission facilities. The agent will also provide maps of the line route or site, maps showing the landowner's parcel, and offer compensation for the transmission line easement. During the negotiation process, the location of the proposed transmission line can be staked.

At a minimum, the monetary offer made by the utility's representative(s) must compensate for any diminution in value of the fair market value of the property due to the encumbrance of the

transmission line easement. The landowner is allowed a reasonable amount of time in which to consider the offer and to present any material that the owner believes is relevant to determining the easement's value.

If the landowner desires a second opinion as to the fair market value of the property to be taken, the landowner and/or Xcel Energy may have an appraisal made. The landowner may be reimbursed up to $500 toward the appraiser fee as long as the appraisal follows standard and accepted appraisal practices (Minn. Stat. § 117.189).

In nearly all cases, Xcel Energy is able to work with the landowners to address their concerns and an agreement is reached for the utilities' purchase of land rights. The right-of-way agent prepares all of the documents required to complete each transaction and will take care of all title issues and document filing.

In rare instances, a negotiated settlement cannot be reached and the landowner chooses to have an independent third party determine the value of the rights taken. Such valuation is made through the utility's exercise of the right of eminent domain pursuant to Minnesota Statute Chapter 117. The process of exercising the right of eminent domain is called condemnation.

To start the condemnation process, a utility files a Petition in the district court where the property is located and serves that Petition on all owners of the property. If the court grants the Petition, the court then appoints a three-person condemnation commission that will determine the compensation for the easement. The three people must be knowledgeable of applicable real estate issues. Once appointed, the commissioners schedule a viewing of the property over and across which the transmission line easement is to be located. Next, the commission schedules a valuation hearing where the utility and landowners can testify as to the fair market value of the easement or fee. The commission then makes an award as to the value of the property acquired and files it with the court. Each party has 40 days from the filing of the award to appeal to the district court for a jury trial. In the event of an appeal, the jury hears land value evidence and renders a verdict. At any point in this process, the case can be dismissed if the parties reach a settlement.

Once right-of-way is acquired and prior to construction, the right-of-way agent will again contact the owner of each parcel to discuss the construction schedule and construction requirements. To ensure safe construction of the line, special consideration may be needed for fences or other personal property issues. For instance, fences may need to be moved or certain features protected. In each case the right-of-way agent coordinates these processes with the landowner.

5.1.3 Overhead Transmission Construction Procedures

Construction will begin after federal, state and local approvals are obtained, property and rights-of-way are acquired, soil conditions are established and final design is complete. The precise timing of

construction will take into account various requirements that may be in place due to permit conditions, system loading issues and available workforce.

The actual construction will follow standard construction and mitigation practices that were developed from experience with past projects. These best practices address right-of-way clearance, staging, erecting transmission line structures and stringing transmission lines. Construction and mitigation practices to minimize impacts will be developed based on the proposed schedule for activities, permit requirements, prohibitions, maintenance guidelines, inspection procedures, terrain and other practices. In some cases these activities, such as schedules, are modified to minimize impacts to sensitive environments.

Transmission line structures are generally designed for installation at existing grades. Typically, structure sites with 10% or less slope will not be graded or leveled. Sites with more than 10% slope will have working areas graded level or fill brought in for working pads. If the landowner permits, it is preferred to leave the leveled areas and working pads in place for use in future maintenance activities, if any. If permission is not obtained, the site is graded back to its original condition as much as possible and all imported fill is removed from the site.

Typical construction equipment used on a project consists of tree removal equipment, mowers, cranes, backhoes, digger-derrick line trucks, track-mounted drill rigs, dump trucks, front end loaders, bucket trucks, bulldozers, flatbed tractor-trailers, flatbed trucks, pickup trucks, concrete trucks and various trailers. Many types of excavation equipment are set on wheel or track-driven vehicles. Steel poles are transported on tractor-trailers. It is anticipated that the poles may be erected aerially due to space limitations.

Staging areas are usually established for a project. Staging involves delivering the equipment and materials necessary to construct the new transmission line facilities. Construction of the Project would likely include one or two staging areas. The materials are stored at staging areas until they are needed for the Project.

Temporary lay down areas may be required for additional space for storage during construction. These areas will be selected for their location, access, security and ability to efficiently and safely warehouse supplies. The areas are chosen to minimize excavation and grading. The temporary lay down areas outside of the transmission line right-of-way will be obtained from affected landowners through rental agreements.

Access to the transmission line right-of-way corridor is made directly from existing roads that run parallel or perpendicular to the transmission line right-of-way. Depending upon the type of construction method used, roads would be closed during road crossings one lane at a time, with several days of road closures anticipated at each structural location. Road closures would require a permit from the appropriate governing agency. Depending on the route permitted, construction

may impact use of the Greenway on a very temporary basis. The Company will work with stakeholders to minimize impacts when feasible.

When it is time to install the poles, structures are moved from the staging areas and delivered to the staked location. The structures are placed within the right-of-way until the structure is set. Insulators and other hardware are attached while the steel pole is on the ground. The pole is then lifted, placed and secured on the foundation using a crane, or set aerially.

Typical tangent and angle structures will be installed by direct embedding them into the ground for the single circuit alternatives. This method typically involves digging a hole for each pole, placement of a corrugated metal culvert for soil support which is partially filled with crushed rock and then setting the pole on top of the rock base. The area around the pole is then backfilled with crushed rock and/or soil. The proposed double circuit poles would be placed on concrete or drilled pier foundations. Structures that are considered medium angle, heavy angle or dead-end structures will be supported by concrete drilled pier foundations. In those cases, excavations will need to be drilled in preparation for the concrete. Drilled pier foundations may vary from five to seven feet in diameter and 20 or more feet deep, depending on soil conditions. Rubber tire mixers will transport the concrete to each site from a local concrete batch plant.

Environmentally sensitive areas may also require special construction techniques in some circumstances. These may include additional erosion control measures to protect steep slopes, matting to minimize soil disturbance/compaction, and/or remediation associated with unanticipated contaminated soils.

5.1.4 OVERHEAD TRANSMISSION RESTORATION PROCEDURES

During construction, crews will attempt to limit ground disturbance wherever possible. However, areas are disturbed during the normal course of work, which can take several weeks in any one location. As construction on each parcel is completed, disturbed areas are restored to their original condition to the maximum extent practicable. The right-of-way agent contacts each property owner after construction is completed to see if any remaining damage as a result of the project needs to be repaired. If non-repairable damage has occurred to the property, the Company will fairly reimburse the landowner for the damages sustained. In some cases, the Company may engage an outside contractor to restore the damaged property as near as possible to its original condition. Portions of vegetation that are disturbed or removed during construction of transmission lines will naturally reestablish to pre-disturbance conditions. Resilient species of common grasses and shrubs typically reestablish with few problems after disturbance. Areas with significant soil compaction and disturbance from construction activities along the proposed transmission line corridor will require assistance in reestablishing the vegetation stratum and controlling soil erosion. Commonly used methods to control soil erosion and assist in reestablishing vegetation include, but are not limited to:

- Erosion control blankets with embedded seeds
- Silt fences
- Matting
- Hay bales

These erosion control and vegetation establishment practices are regularly used in construction projects and are referenced in the construction permit plans. Long-term impacts are minimized by utilizing these construction techniques.

5.1.5 OVERHEAD TRANSMISSION MAINTENANCE PROCEDURES

Transmission lines and substations are designed to operate for decades and require only moderate maintenance, particularly in the first few years of operation.

The estimated service life of the proposed transmission line for accounting purposes is approximately 40 years. However, practically speaking, HVTLs are seldom completely retired. Transmission infrastructure has very few mechanical elements and is built to withstand weather extremes that are not normally encountered. With the exception of severe weather such as tornadoes and heavy ice storms, transmission lines rarely experience structural and/or electrical failures. Transmission lines are automatically taken out of service by the operation of protective relaying equipment when a fault is sensed on the system. Such interruptions are usually only momentary. Scheduled maintenance outages are also infrequent. As a result, the average annual availability of transmission infrastructure is very high, in excess of 99%.

The principal operating and maintenance cost for transmission facilities is the cost of inspections, done every other year by ground inspection in metro areas. Annual operating and maintenance costs for transmission lines in Minnesota and the surrounding states vary. For voltages from 115 kV through 345 kV, Company experience shows that costs are approximately $300 to $500 per mile. Actual line-specific maintenance costs depend on the setting, the amount of vegetation management necessary, storm damage occurrences, structure types, materials used and the age of the line.

Substations require a certain amount of maintenance to keep them functioning in accordance with accepted operating parameters and the NESC and NERC requirements. Transformers, circuit breakers, batteries, protective relays and other equipment need to be serviced periodically in accordance with the manufacturer's recommendation. The site itself must be kept free of vegetation and drainage maintained.

5.2 UNDERGROUND TRANSMISSION FACILITIES, ROUTES A AND D

Two underground transmission construction designs are presented in this Application (*i.e.*, Route A and Route D). Figure 11 and Figure 14 depict the underground routes evaluated.

Generally, for transmission voltages (115 kV or greater), overhead construction is the standard technology due to its cost. Underground transmission lines also have substantially longer construction times and longer repair times than equivalent overhead lines. The industry experience is that underground transmission lines become economically warranted only when cost and difficulty of overhead line siting, routing and construction substantially increase, such as in major metropolitan downtown areas. Underground construction is also used where overhead facilities are prohibited, such as in airport flight paths, or in highly sensitive environmental areas.

High voltage underground cable requires significant study to determine the cable design criteria according to power transfer, reactive compensation, heat transfer, emergency loading, fault capacity, redundancy and environment. Design of underground lines requires soil sampling and testing to determine the thermal conductivity of the earth and ability to trench/bore in the prospective right-of-way.

Technologies for construction of underground lines include surface-cut open trenching, horizontal boring and horizontal directional drilling ("HDD"). Trenching is preferred because it is easily controlled and the most cost effective method for construction, even though mitigation efforts may be necessary to shore up the trench for worker safety, dewater to keep the trench dry, backfill with selective materials to improve heat transfer, and landscape/re-vegetate disturbed areas. Horizontal boring and directional drilling, while more expensive than trenching, are most often used to pass the cables, pipes and conduits below existing objects that are very difficult to open up for a trench such as deep ravines, railroad crossing, major roads, rivers, *etc.* Figure 20 shows an underground single circuit 115 kV facility being built using the trenching method. The trench for a double circuit 115 kV would be at least twice the size.

Underground transmission lines require the installation of a duct system. The diameter of high voltage underground cables is determined by the conductor which carries the load current, the insulation thickness required for the power system line-to-ground voltage, and the cable's electrostatic shield system. Generally, the conductor of an underground transmission line will be twice the size of an equivalent overhead transmission line. This is a result of the limited heat dissipation due to cable insulation and below grade encasement.

FIGURE 20
UNDERGROUND 115 KV SINGLE CIRCUIT CONSTRUCTION TRENCH BRACING

If one of the two underground designs, Route A or Route D, is selected, the majority of the underground facilities would consist of two identical concrete duct banks containing four (4) 6-inch polyvinyl chloride ("PVC") conduits for the transmission circuits, and two (2) 2-inch PVC conduits for ground continuity, and communication needs. The layout would have the duct banks installed adjacent to each other in the same trench. The duct banks may also be installed in separate trenches as dictated by physical limitation of the route (for example, running parallel on opposite sides of a surface street). Two HDD crossings will likely be required near Hiawatha Avenue. The conductor would be high voltage extruded dielectric ("HVED") cable, 3000 kcmil Copper cross-linked polyethylene type or similar. The dielectric fluid is tasteless, odorless, clear and has a low combustion flash point. Cable vaults with manhole access will be required approximately every 1500 feet and at any major changes in direction in the route to facilitate the installation of the cable as well as for future inspection and repair. A typical vault with manhole access would be approximately 24 - 25 feet in length by 14 feet in width by seven to 10 feet in height. Figure 21 and Figure 22 illustrate underground ducts and vaults.

FIGURE 21
UNDERGROUND DUCT SECTION

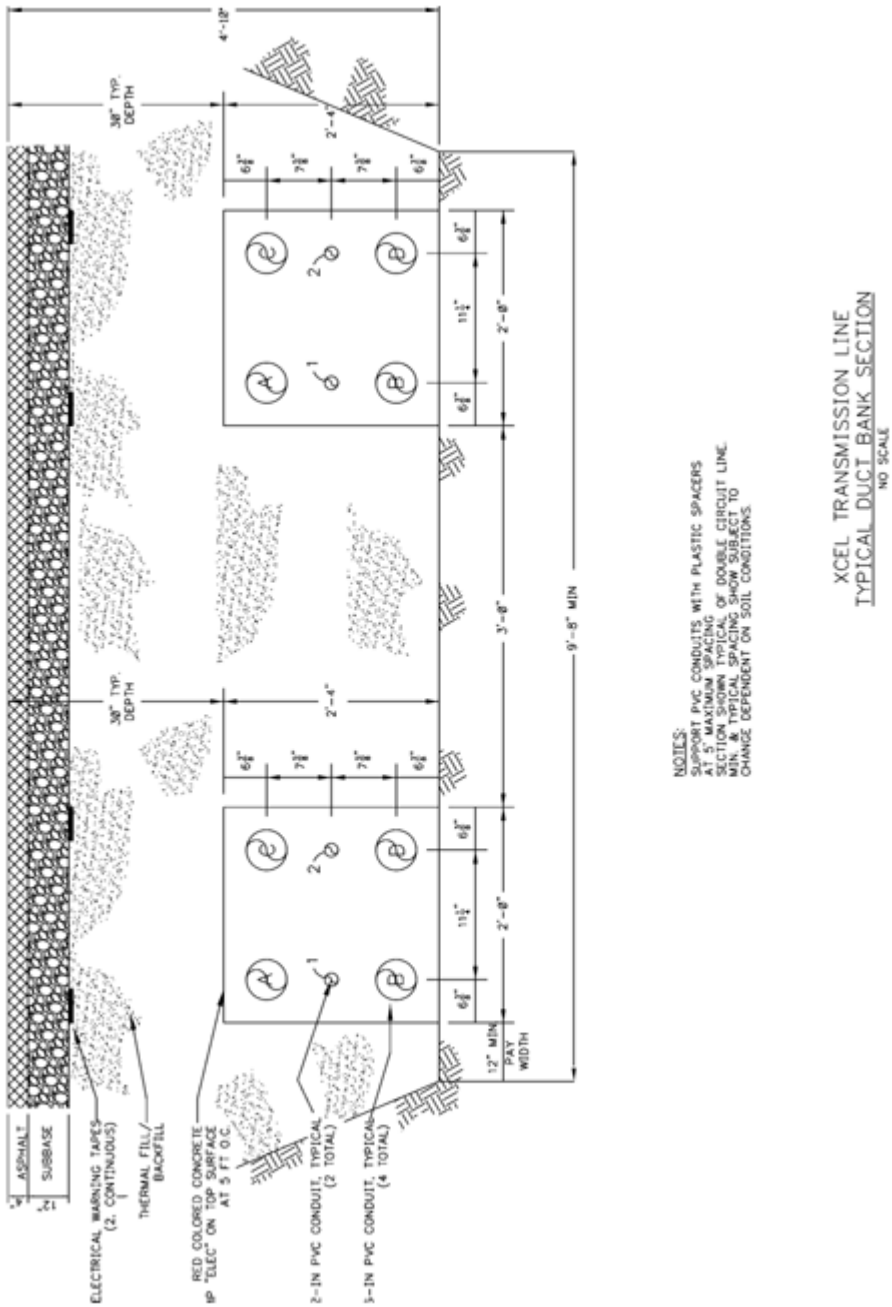

FIGURE 22
UNDERGROUND CABLE VAULT

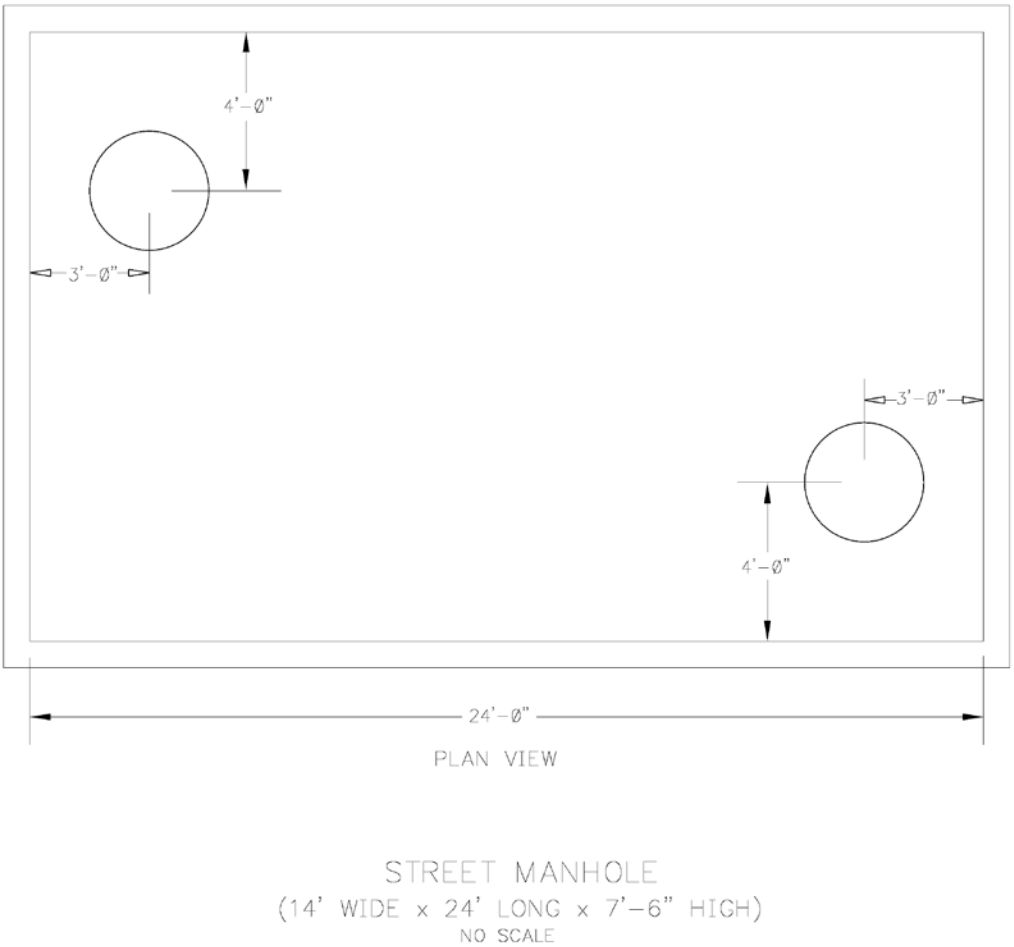

It is anticipated that the majority of the transmission facilities would be constructed by installation of a concrete encased duct bank raceway system in an open cut trench. Open cut trenching is used to install most duct systems in city streets today and has been used since underground installation of electrical facilities began in the early 1900s. It is the method of choice for most installations because it is readily adaptable to most conditions found in the field, as long as sufficient space exists to conduct the open cut trenching operation.

Probably the greatest advantage of using the open cut method is that excavation contractors with the level of experience needed to successfully use the methodology are available in most locations. The system used is similar to that used to install most subsurface infrastructure. In most cases, the open cut trenching can accommodate high water tables by using normal dewatering methods, provided the work complies with National Pollutant Discharge Elimination System ("NPDES") permits and other local requirements.

In most urban locations, the concrete encased duct bank is the preferred method of underground installation. Duct installation of underground cable systems can be economical when many circuits are to be installed in a confined area. Spare ducts are sometimes included to allow future installation of additional cable circuits. This Project includes construction of one extra duct bank with extra cable for backup should a fault occur. The duct system provides supplemental dig-in protection for the cables, minimizes the probability of concurrent failures of adjacent cables or circuits and minimizes the length of trench open at any one time. The cables are pulled into the ducts after the backfilling operation has been completed.

Manholes are installed along the duct line at spacing not exceeding maximum cable pulling lengths. These pulling lengths are limited by maximum permissible cable pulling tensions and maximum sidewall pressures. Maximum reel sizes may limit cable-pulling lengths in some cases. Extra manholes may be required at sharp bends along the duct route. When cable faults occur in duct systems, the faulted cable section is pulled out and replaced between adjacent manholes. At the ends of the underground line, termination poles or structures are used to transition from underground to overhead construction as necessary.

A different method of installation is anticipated at the crossings of Hiawatha Avenue and the Metro Transit Hiawatha Light Rail Line. At these locations, HDD would be used. Initially used in the 1970s, directional crossings are a marriage of conventional road boring and directional drilling of oil wells. Pipelines have been installed for carrying oil, natural gas, water and other products using HDD. Ducts have been installed to carry electric and fiber optic cables. Besides crossing under rivers and waterways, HDD installations have been made crossing under highways, railroads, airport runways, shore approaches, islands, areas congested with buildings, pipeline corridors and future water channels. Although directional drilling was originally used primarily on the U.S. Gulf Coast through alluvial soils, more and more crossings have been undertaken through gravel, cobble, glacial till and hard rock. Adequate space must be available to allow rigs to set up for the duration of the installation.

HDD installations have the least environmental impact of any underground installation method. The technology also offers maximum depth of cover under the obstacle, thereby affording maximum protection and minimizing maintenance costs. HDD installations have a reasonably predictable and short construction schedule. Directional drilling may minimize social impacts such as extensive highway closures and traffic congestion under the right conditions. Perhaps the most significant advantage is that HDD installations are, in select cases, less expensive than tunnel boring methods. However, HDD installations are more costly than open trenched crossings.

5.2.1 UNDERGROUND TRANSMISSION RIGHT-OF-WAY EVALUATION AND ACQUISITION

The underground lines would require a 30-foot wide right-of-way with 15 feet on each side of the transmission line centerline. The identified routes for both the overhead and underground scenarios are located primarily within public street right-of-way or the HCRRA corridor. It is anticipated that easement acquisition from private landowners will be limited to ensure adequate clearances for safe operation of the facilities. Underground line right-of-way evaluation and acquisition would proceed in a manner similar to that of overhead lines. The right-of-way evaluation and acquisition process is described in section 5.1.2.

5.2.2 UNDERGROUND TRANSMISSION CONSTRUCTION PROCEDURES

Construction will begin after federal, state and local approvals are obtained, property and rights-of-way are acquired, soil conditions are established and final design is completed. The precise timing of construction will take into account various requirements that may be in place due to permit conditions, system loading issues and available workforce.

The actual construction will follow standard construction and mitigation practices that were developed from experience with past projects. These best practices address right-of-way clearance, staging, construction of subsurface structures and conductor pulling techniques. Construction and mitigation practices to minimize impacts will be developed based on the proposed schedule for activities, permit requirements, prohibitions, maintenance guidelines, inspection procedures, terrain and other practices. In some cases these activities, such as schedules, are modified to minimize impacts to sensitive environments. During all stages of the construction activities, a safety barrier would enclose the work area to prevent unauthorized access to the area.

For underground transmission line construction, the construction of the initial duct banks would proceed at a rate of about 200 feet per day assuming normal conditions are encountered. Once the initial duct banks are installed, the transmission cables would be pulled through and spliced at each of the maintenance entrances.

Double circuit underground lines can be installed either horizontally or vertically. Horizontal installation would place the circuits at approximately the same depth in the trench and would require an approximately 15-foot-wide and six-foot-deep construction trench. Vertical installation would place one circuit on top of the other and would require an approximately five-foot-wide and 12-foot-deep construction trench. The exact size of the trench may vary based upon conditions encountered during construction.

Typical construction equipment used on a project consists of tree removal equipment, mowers, cranes, backhoes, digger-derrick line trucks, track-mounted drill rigs, dump trucks, front end-loaders,

bucket trucks, bulldozers, flatbed tractor-trailers, flatbed trucks, pickup trucks, concrete trucks and various trailers. Many types of excavation equipment are set on wheel or track-driven vehicles.

Staging areas are usually established for the project. Staging involves delivering the equipment and materials necessary to construct the new transmission line facilities. Construction of the Project may include one or two staging areas near the substation locations. The materials are stored at staging areas until they are needed for the Project.

Temporary lay down areas may be required for additional space for storage during construction. These areas will be selected for their location, access, security and ability to efficiently and safely warehouse supplies. The areas are chosen to minimize excavation and grading. The temporary lay down areas outside of the transmission line right-of-way will be obtained from affected landowners through rental agreements.

Access to the transmission line right-of-way corridor is made directly from existing roads that run parallel or perpendicular to the transmission line right-of-way. Depending upon the type of construction method used, roads would be closed during road crossings one lane at a time, with several days of road closures anticipated at each structural location. Road closures would require a permit from the appropriate governing agency. The proposed route runs along and crosses the Greenway. If a closure of the bike path is needed for construction, it will be temporary in nature and the Company will work with stakeholders to minimize impacts when feasible.

Environmentally sensitive areas may also require special construction techniques in some circumstances. These may include additional erosion control measures to protect steep slopes and/or remediation associated with unanticipated contaminated soils.

The two main methods of underground transmission line construction are open cut trenching and HDD. These two construction methods are described in greater detail in the preceding sections.

5.2.3 UNDERGROUND TRANSMISSION RESTORATION PROCEDURES

During construction, crews will attempt to limit excess ground disturbance wherever possible. However, underground transmission installation requires such disturbance through creation of a trench along the entire route, with the exception of areas where the line is being installed using HDD methods. Construction can take several weeks in any one location. As construction on each parcel is completed, disturbed areas are restored to their original condition to the maximum extent practicable. The right-of-way agent contacts each property owner after construction is completed to see if any damage remains as a result of the project. If non-repairable damage has occurred to the property, Xcel Energy will fairly reimburse the landowner for the damages sustained. In some cases, Xcel Energy may engage an outside contractor to restore the damaged property as nearly as possible to its original condition. Portions of vegetation that are disturbed or removed during construction of transmission lines will naturally reestablish to pre-disturbance conditions. Resilient species of

common grasses and shrubs typically reestablish with few problems after disturbance. Where trees are removed, the Company will work with the landowner to replace the tree with a similar compatible species. Areas with significant soil compaction and disturbance from construction activities along the proposed transmission line corridor will require assistance in reestablishing the vegetation stratum and controlling soil erosion. Commonly used methods to control soil erosion and assist in reestablishing vegetation include, but are not limited to:

- Erosion control blankets with embedded seeds
- Silt fences
- Matting
- Hay bales

These erosion control and vegetation establishment practices are regularly used in construction projects and are referenced in the construction permit plans. Using these techniques minimizes long-term impacts.

Underground transmission installation would require clearing of all vegetation along the right-of-way. The cleared areas would be revegetated with compatible shallow rooted species. During construction extensive use of erosion control measures would be required along the length of the line, as compared to overhead construction, where erosion control measures are only required in the vicinity of the structure locations.

During construction, soils would be stockpiled in the vicinity of the construction activities and returned to the trench once construction is complete, with the exception of certain contaminated soils (See Section 7.2.2). Depending upon soil and transmission line type, off-site fill may be required for heat dissipation purposes. In this case, the excess soil from the trench would be appropriately disposed of once construction is complete.

5.2.4 UNDERGROUND TRANSMISSION MAINTENANCE PROCEDURES

Underground transmission lines present challenging service issues. While they are subject to fewer outages, the outages are typically longer in duration because underground cables do not have temporary faults such as branches falling or ice breakage and are not subjected to reclosing operations. As a result, the down time associated with an underground transmission line fault will be longer in duration than the equivalent overhead line failure. Typical overhead line outages are repaired and back in service 10-24 hours after the outage event. In contrast, typical underground line outages are repaired and the line placed back in service two to three weeks after the outage event.

Routine inspections on the underground transmission line would not be completed unless a maintenance and/or repair need is identified.

Substations require a certain amount of maintenance to keep them functioning in accordance with accepted operating parameters and the NESC and NERC requirements. Transformers, circuit breakers, batteries, protective relays and other equipment need to be serviced periodically in accordance with the manufacturer's recommendation. The site itself must be kept free of vegetation and appropriate drainage maintained.

6.0 TRANSMISSION LINE CHARACTERISTICS

6.1 ELECTRIC AND MAGNETIC FIELDS

EMF arise from the flow of electricity and the voltage of a power line.

Electric fields are measured in kilovolts per meter ("kV/m") and magnetic fields are measured in milliGauss ("mG"). The intensity of the electric field is proportional to the voltage of the transmission line, while the intensity of the magnetic field is proportional to the current flow through the conductors. Transmission lines operate at a power frequency of 60 hertz (cycles per second).

There is no federal standard for transmission line electric fields. However, the Minnesota Public Utilities Commission has imposed a maximum electric field limit of 8 kV/m measured at one meter above the ground at the edge of the right-of-way (*see In the Matter of the Petition of Northern States Power Company d/b/a Xcel Energy and Dairyland Cooperative for a Route Permit to Construct a 115 kV and 161 kV Transmission Line from Taylors Falls to Chisago County Substation*, Docket No. E-002/TL-06-1677, Environmental Assessment, at p. 45 (Aug. 20, 2007)). The standard was designed to prevent serious hazards from shocks when touching large objects parked under alternating current ("AC") transmission lines of 500 kV or greater. The maximum electric field associated with Route A, overhead construction measured at one meter above ground, is calculated to be 1.12 kV/m.

Considerable research has been conducted over the past three decades to determine if exposure to power-frequency (60 hertz) magnetic fields causes biological responses and health effects. Epidemiological and toxicological studies have shown no statistically significant association or weak associations between magnetic fields exposure and health risks. The possible impact of EMF exposure to human health has also been investigated by public health professionals for the past several decades. While the general consensus is that electric fields pose no human risk, the question of whether exposure to magnetic fields can cause biological responses or health effects continues to be debated.

In 1999, the National Institute of Environmental Health Sciences ("NIEHS") issued its final report on "Health Effects from Exposure to Power-Line Frequency Electric and Magnetic Fields" in response to the Energy Policy Act of 1992. NIEHS concluded that the scientific evidence linking EMF exposures with health risks is weak, a finding that does not warrant aggressive regulatory concern. However, because of the weak scientific evidence that supports some association between EMF and health effects and the common exposure to electricity in the United States, passive regulatory action, such as providing public education on reducing exposures, is warranted.

In 2007, the World Health Organization ("WHO") concluded a review of the health implications of electromagnetic fields. In this report, the WHO stated:

> Uncertainties in the hazard assessment [of epidemiological studies] include the role that control selection bias and exposure misclassification might have on the observed relationship between magnetic fields and childhood leukemia. In addition, virtually all of the laboratory evidence and the mechanistic evidence fail to support a relationship between low-level ELF ("Extremely Low Frequency") magnetic fields and changes in biological function or disease status. Thus, on balance, the evidence is not strong enough to be considered causal, but sufficiently strong to remain a concern. (*Environmental Health Criteria Volume N°238 on Extremely Low Frequency Fields* at p. 12, WHO (2007)).

In addition, regarding disease outcomes, aside from childhood leukemia, the WHO stated:

> A number of other diseases have been investigated for possible association with ELF magnetic field exposure. These include cancers in both children and adults, depression, suicide, reproductive dysfunction, developmental disorders, immunological modifications and neurological disease. The scientific evidence supporting a linkage between ELF magnetic fields and any of these diseases is much weaker than for childhood leukemia and in some cases (for example, for cardiovascular disease or breast cancer) the evidence is sufficient to give confidence that magnetic fields do not cause the disease. (Id. at p.12).

Furthermore, in their "Summary and Recommendations for Further Study" WHO emphasized that:

> the limit values in [EMF] exposure guidelines [not] be reduced to some arbitrary level in the name of precaution. Such practice undermines the scientific foundation on which the limits are based and is likely to be an expensive and not necessarily effective way of providing protection. (*Id.* at p. 12).

WHO concluded that:

> given both the weakness of the evidence for a link between exposure to ELF magnetic fields and childhood leukemia, and the limited impact on public health if there is a link, the benefits of exposure reduction on health are unclear. Thus, the costs of precautionary measures should be very low. (*Id.* at p. 13).

Wisconsin, Minnesota and California have all conducted literature reviews or research to examine this issue. In 2002, Minnesota formed an Interagency Working Group ("Working Group") to evaluate the body of research and develop policy recommendations to protect the public health from any potential problems resulting from HVTL EMF effects. The Working Group consisted of staff from various state agencies. Its findings were published in a White Paper on Electric and

Magnetic Field (EMF) Policy and Mitigation Options in September 2002 (Minnesota Department of Health, 2002). The report summarized the findings of the Working Group as follows:

> Research on the health effects of EMF has been carried out since the 1970s. Epidemiological studies have mixed results – some have shown no statistically significant association between exposure to EMF and health effects, some have shown a weak association. More recently, laboratory studies have failed to show such an association, or to establish a biological mechanism for how magnetic fields may cause cancer. A number of scientific panels convened by national and international health agencies and the United States Congress have reviewed the research carried out to date. Most researchers concluded that there is insufficient evidence to prove an association between EMF and health effects; however, many of them also concluded that there is insufficient evidence to prove that EMF exposure is safe. (*Id.* at p. 1.)

Based on the Working Group and WHO findings, the Commission has repeatedly found that "there is insufficient evidence to demonstrate a causal relationship between EMF exposure and any adverse human health effects." *In the Matter of the Application of Xcel Energy for a Route Permit for the Lake Yankton to Marshall Transmission Line Project in Lyon County*, Docket No. E-002/TL-07-1407, Findings of Fact, Conclusions of Law and Order Issuing a Route Permit to Xcel Energy for the Lake Yankton to Marshall Transmission Project at pp. 7-8 (Aug. 29, 2008); *see also In the Matter of the Application for a HVTL Route Permit for the Tower Transmission Line Project*, Docket No. ET-2, ET015/TL-06-1624, Findings of Fact, Conclusions of Law and Order Issuing a Route Permit to Minnesota Power and Great River Energy for the Tower Transmission Line Project and Associated Facilities at p. 23 (Aug. 1, 2007)).

The Office of Energy Security, Facilities Permitting Staff, has also analyzed the potential impacts of EMF on human health and safety and concluded that there is insufficient evidence to show a link between EMF and health effects:

> A number of national and international health agencies (The Minnesota Department of Health, The World Health Organization, The National Institute of Environmental Health Sciences) have generally concluded in their research that there is insufficient evidence to prove a connection between EMF exposure and health effects. Research has not been able to establish a cause and effect relationship between exposure to magnetic fields and human disease, nor a plausible biological mechanism by which exposure to EMF could cause disease.

In the Matter of the Application for a Route Permit for the Yankee Substation to Brookings County Substation 115 kV High Voltage Transmission Line Project, Docket No. E002/TL-07-1626, Environmental Assessment p. 10 (May 30, 2008).

The Public Service Commission of Wisconsin ("PSCW") has periodically reviewed the science on EMF since 1989 and has held hearings to consider the topic of EMF and human health effects. The most recent hearings on EMF were held in July 1998. In January 2008, the PSCW published a fact sheet regarding EMF, which noted:

> Many scientists believe the potential for health risks for exposure to EMF is very small. This is supported, in part, by weak epidemiological evidence and the lack of a plausible biological mechanism that explains how exposure to EMF could cause disease. The magnetic fields produced by electricity are weak and do not have enough energy to break chemical bonds or to cause mutations in DNA. Without a mechanism, scientists have no idea what kind of exposure, if any, might be harmful. In addition, whole animal studies investigating long-term exposure to power frequency EMF have shown no connection between exposure and cancer of any kind (*EMF-Electric & Magnetic Fields*, Public Service Commission of Wisconsin (January 2008)).

There are presently no Minnesota regulations pertaining to EMF exposure. Xcel Energy provides information to the public, interested customers and employees so they can make informed decisions about EMF. Such information includes EMF measurements for customers and employees upon their request.

6.1.1 ELECTRIC FIELDS

The strength of the electric field is dependant on the charge of the object (a transmission line in this case) creating the field. The charge at the ground level is strongly influenced by the system voltage level and is measured in kV/m. Table 7 provides the electric field calculations at maximum operating voltage of the proposed 115 kV transmission line. Maximum operating voltage is defined as 105% of the nominal voltage of the line. Calculations for overhead conductors were obtained from "ENVIRO", a software program, licensed by Electric Power Research Institute, Inc ("EPRI") and for underground conductors were obtained from "CYMCAP"

TABLE 7
CALCULATED ELECTRIC FIELDS (KV/M) FOR PROPOSED 115 KV TRANSMISSION LINE DESIGNS
(1 METER OR 3.28 FEET ABOVE GROUND)

Routes	Structure Type	Nominal Voltage (kV)	Distance to Proposed Centerline								
			-200'	-100'	-50'	-25'	0'	25'	50'	100'	200'
B & C	Horizontal Post 115 kV Single circuit	121	0.02	0.05	0.05	0.13	1.12	1.09	0.09	0.08	0.03
A	Davit Arm 115 kV/115 kV Steel Pole Double circuit	121	0.01	0.02	0.15	1.00	0.56	1.00	0.15	0.02	0.01
A & D	Transmission Duct Bank 115 kV/115 kV Underground Double circuit	121	0.00	0.01	0.04	0.13	4.6	0.19	0.06	0.01	0.00

The proposed 115 kV single circuit overhead transmission lines along Route B or C would have a maximum electric field of approximately 1.12 kV/m, at the centerline of the structure measured at one meter above ground. The proposed 115 kV double circuit overhead transmission line along Route A would have a maximum electric field of approximately 1.00 kV/m twenty-five feet from either side of the centerline, one meter above ground. The proposed 115 kV double circuit underground transmission line along Route A or Route D would have a maximum electric field of approximately 4.6 kV/m, at the centerline, one meter above ground. In other words, the measurement of the underground line is taken as if you were standing directly above the center of the transmission line, and took the reading at one meter above the surface of the ground you were standing on. This is significantly less than the maximum limit of 8 kV/m that has been a permit condition imposed by the Commission in HVTL routing proceedings.

6.1.2 MAGNETIC FIELDS

Magnetic Fields arise from the flow of electricity or current that travels along transmission lines, distribution (feeder) lines, substation transformers, house wiring and household electrical appliances. The intensity of a magnetic field is proportional to the current flow through the conductors (wire).

Table 8 provides the calculated magnetic fields for the proposed 115 kV transmission line design. The magnetic fields for the proposed structure type and expected peak and average current flows projected for the year 2010 have been calculated at various distances from the center of the structure. Magnetic fields are expressed in mG.

There are two conductor options (1250 kcmil and 3000 kcmil) for underground construction, magnetic fields have been calculated for both potential conductors, field conditions will determine which conductor size is used.

6.2 STRAY VOLTAGE

"Stray voltage" is a condition that can occur on electric service entrances to structures from distribution lines, not transmission lines. More precisely, stray voltage is a voltage that exists between the neutral wire of the service entrance and grounded objects in buildings such as barns and milking parlors. Transmission lines do not, by themselves, create stray voltage because they do not connect to businesses or residences. Transmission lines, however, can induce stray voltage on a distribution circuit that is parallel to and immediately under the transmission line. Appropriate measures will be taken to prevent stray voltage problems when the transmission lines proposed in this Application are parallel to or cross distribution lines.

6.3 VEHICLE USE AND METAL BUILDINGS NEAR POWER LINES

Passenger vehicles and trucks may be safely used under and near power lines. The power lines will be designed to meet or exceed minimum clearance requirements over roads, driveways, cultivated fields and grazing lands specified by the NESC. Recommended clearances within the NESC are designed to accommodate a relative vehicle height of 14 feet.

There is a potential for vehicles under HVTLs to build up an electric charge. If this occurs, the vehicle can be grounded by attaching a grounding strap to the vehicle long enough to touch the earth. Such buildup is a rare event because generally vehicles are effectively grounded through tires. Modern tires provide an electrical path to ground because carbon black, a good conductor of electricity, is added when they are produced. Vehicles will not normally build up a charge unless they have unusually old tires or are parked on dry rock, plastic, or other surfaces that insulate them from the ground.

Buildings are permitted near transmission lines but are generally prohibited within the right-of-way itself because a structure under a line may interfere with safe operation of the transmission facilities. For example, a fire in a building on the right-of-way could damage a transmission line. As a result, NESC guidelines establish clear zones for transmission facilities. Metal buildings may have unique issues. For example, metal buildings near power lines of 200 kV or greater must be properly grounded. Any person with questions about a new or existing metal structure can contact the Company for further information about proper grounding requirements.

TABLE 8
CALCULATED MAGNETIC FLUX DENSITY (MILLIGAUSS) FOR PROPOSED 115 KV TRANSMISSION LINE DESIGNS (1 METER OR 3.28 FEET ABOVE GROUND)

Route	Structure Type	System Condition	Current (Amps)	Distance to Proposed Centerline										
				-200'	-100'	-75'	-50'	-25'	0'	25'	50'	75'	100'	200'
B & C	Horizontal Post 115kV Single Circuit	Peak	230	0.67	2.24	3.50	6.07	12.11	26.16	26.25	12.18	6.10	3.51	0.86
		Average	138	0.42	1.41	2.20	3.82	7.63	16.49	16.54	7.68	3.84	2.21	0.54
A	Davit Arm 115kV/115kV Steel Pole Double Circuit	Peak	230	0.22	1.49	3.13	7.88	23.03	38.44	22.77	7.73	3.05	1.44	0.21
		Average	138	0.13	0.90	1.79	4.73	13.82	23.06	13.66	4.64	1.72	0.87	0.13
A & D (3000 kcmil)	Transmission Duct Bank 115kV/115kV Under ground Double Circuit	Peak	230	0.00	0.01	0.03	0.11	0.84	13.08	0.85	0.11	0.03	0.01	0.00
		Average	138	0.00	0.01	0.02	0.07	0.51	7.85	0.51	0.07	0.02	0.01	0.00
A & D (1250 Kcmil)	Transmission Duct Bank 115kV/115kV Under ground Double Circuit	Peak	230	0.00	0.01	0.02	0.05	0.37	19.67	0.37	0.05	0.01	0.01	0.00
		Average	138	0.00	0.00	0.01	0.03	0.22	11.80	0.22	0.03	0.01	0.00	0.00

7.0 ENVIRONMENTAL INFORMATION

This section provides a description of the environmental setting, potential impacts and mitigative measures the Company has proposed, where appropriate, to minimize the impacts of siting, constructing and operating the Project. If the 115 kV transmission lines were removed in the future, the land could be restored to its prior condition and/or put to a different use. The majority of the measures proposed are part of the standard construction process at the Company. Unless otherwise identified in the following text, the costs of the mitigative measures proposed are considered nominal.

7.1 DESCRIPTION OF ENVIRONMENTAL SETTING

The Project would be located in the City of Minneapolis in Hennepin County. The area surrounding the Hiawatha Substation sites is mainly commercial and industrial on both the eastern and western sides of Hiawatha Avenue. The Metro Transit Hiawatha Light Rail Line and other major transportation corridors are located in close proximity to the proposed Hiawatha Substation. The nearest residential structures to the proposed Hiawatha Substation is Hiawatha Commons, a mixed-use residential and commercial building located at 2740 Minnehaha Avenue. The area surrounding the Midtown Substation sites is light industry, single and multi-unit residential and commercial.

The area surrounding the transmission line alternatives varies in use from primarily residential to commercial, light and medium industrial, parks and major transportation corridors. (See Zoning Maps, Appendix B.9.1 – B.9.6 and Land Use Map, Appendix B.10).

The Project Area is located within the MnDNR Anoka Sand Plain Ecological Subsection within the MnDNR's Ecological Classification section. The Anoka Sand Plain was formed from sand deposited by glacial meltwater. However, the land features in the Project Area have been largely shaped by human activity (MnDNR, 2009a). The Project Area is not located within a FEMA-designated floodplain. A FEMA floodplain map has been attached as Appendix B.11.

The topography of the Project Area is relatively level land ranging in elevation between 850 to 870 feet above mean sea level. Bedrock is typically overlain by 50 to 150 feet of either terrace deposits associated with the Mississippi River or glacial outwash. Soils are typically well-drained sands and gravels and in areas may be overlain by artificial fill (See Topographic Map, Appendix B.12) (Hennepin County Geologic Atlas, 1989).

Presettlement vegetation consisted primarily of prairie, savanna and oak and aspen woodlands (MnDNR, 2009a). The present-day use of the land varies from single and multi-unit residential to commercial and industrial.

7.2 HUMAN SETTLEMENT

7.2.1 PUBLIC HEALTH AND SAFETY

The Project will be designed in compliance with local, state, NESC and the Company standards regarding clearance to ground, clearance to crossing utilities, clearance to buildings, strength of materials and right-of-way widths. The Company construction crews and/or contract crews will comply with local, state, NESC and the Company standards regarding installation of facilities and standard construction practices. Company-established and industry safety procedures will be followed during and after installation of the transmission lines. This will include clear signage during all construction activities.

The proposed transmission lines will be equipped with protective devices to safeguard the public from the transmission line if an accident occurs, such as a structure or conductor falling to the ground. The protective devices are breakers and relays located where the line connects to the substation. The protective equipment will de-energize the line should such an event occur. In addition, the substation facilities will be fenced and access limited to authorized personnel. Proper signage will be posted warning the public of the risk of coming into contact with the energized equipment.

Mitigative Measures

There are no further mitigative measures proposed to address human health and safety.

7.2.2 COMMERCIAL, INDUSTRIAL, RESIDENTIAL LAND USE

Current Land Use

All routes would cross various differing land uses as identified by the City of Minneapolis Community Planning and Economic Development Department. The zones crossed by each route alternative are presented in Table 9. Zoning Code Maps for each of the neighborhoods affected by the Project are presented in Appendix B.9.

TABLE 9
LAND USE DESIGNATIONS

Route Alternative/Substation Site	Route Portion	Zoning Code	Zoning District
Route A (29th Street/HCRRA Overhead & Underground Route)	N/A	I1	Light Industrial
		R6	Multiple-family (high density)
		OR3	Institutional Office Residence
		C2	Neighborhood Corridor Commercial
		R2B	Two-family (low density)
		OR2	High Density Office Residence
		I3	General Industrial
		I2	Medium Industrial
Route B (26th Street/28th Street Overhead Route)	26th Street	I1	Light Industrial
		R2B	Two-family (low density)
		R4	Multiple-family (medium density)
		OR2	High Density Office Residence
		C1	Neighborhood Commercial
		C4	General Commercial
		I2	Medium Industrial
	28th Street	I1	Light Industrial
		R6	Multiple-family (high density)
		C2	Neighborhood Corridor Commercial
		OR3	Institutional Office Residence
		R2B	Two-family (low density)
		C1	Neighborhood Commercial
		I2	Medium Industrial

Route Alternative/Substation Site	Route Portion	Zoning Code	Zoning District
Route C (28th Street/31st Street Overhead Route)	28th Street	See Above	
	31st Street	C1	Neighborhood Commercial
		I2	Medium Industrial
		I1	Light Industrial
		R4	Multiple-family (medium density)
		C2	Neighborhood Corridor Commercial
		OR1	Neighborhood Office Residence
		R2B	Two-family (low density)
		C1	Neighborhood Commercial
		R5	Multiple-family (high density)
		OR2	High Density Office Residence
		C3A	Community Activity Center
Route D (28th Street Underground Route)	N/A	I1	Light Industrial
		R6	Multiple-family (high density)
		C2	Neighborhood Corridor Commercial
		OR3	Institutional Office Residence
		R2B	Two-family (low density)
		C1	Neighborhood Commercial
		I2	Medium Industrial
Hiawatha Substation, West and East	N/A	I1	Light Industrial
Midtown Substation, North and South	N/A	I1	Light Industrial

Source: Minneapolis Zoning Code Maps, August 2006

The Hiawatha Substation and the Midtown Substation sites are zoned as Light Industrial (I1) by the City of Minneapolis. The area surrounding the Hiawatha Substation sites is zoned as light to medium industry and commercial shopping areas. The area surrounding the Midtown Substation sites is light industry and multiple-family residential, both high and low density.

Route A is not located within 200 feet of any places of worship or schools. Route B is located within 200 feet of two places of worship and one school; Route C would be located within 200 feet of eight

places of worship and one school; and Route D is located within 200 feet of one place of worship. The construction and operation of the proposed transmission line would not impact these structures or their existing uses.

Contaminated Soils

Because of past land use in the Project Area, the potential exists for encountering contaminated sites during construction. Depending upon the nature and extent, existing contamination can pose a health and safety hazard to construction workers. Contaminated soils or groundwater needs to be properly handled and disposed of to prevent further environmental contamination and to protect workers.

To assess the potential to encounter contaminated soils and groundwater along route alternatives and at substation locations, the Company completed an environmental database search. A copy of the database search is attached as Appendix F. The database identifies known or potential sources of environmental contamination. Because the database also identifies sources that are not necessarily associated with contamination (*e.g.*, permitted air emission and water discharges), the Company assessed the database results to identify those sources that likely represent environmental contamination. Table 10 lists the known or suspected contamination sources within 200 feet of each route alternative.

TABLE 10
KNOWN OR SUSPECTED CONTAMINATED SITES

Structure Type	Route A	Route B	Route C	Route D
Total Route Length (miles)	1.4	3.3	3.8	1.5
Number of Potentially Contaminated Sites (within 200 feet of route)	15	34	26	21

The majority of the known or potential contaminated sites are associated with petroleum releases. Petroleum contaminated soils or groundwater can present a vapor hazard, depending on the type of petroleum involved. For example gasoline has a relatively high proportion of volatile compounds and motor oil has a low amount of volatile compounds. Furthermore, the volatile components decrease with time, thus reducing the vapor hazard. Higher contaminant concentrations, particularly the presence of free-phase product, increase the risk of vapor hazards. Vapors can migrate along

conduits such as sewers and the more permeable backfill of utility trenches. Petroleum vapors can create a health hazard to workers and also, if they accumulate at high enough concentrations, can pose an explosion risk. Petroleum contamination is typically identifiable in the field by staining and/or odor.

The South Minneapolis Residential Soil Contamination Site is present in the Project Area. This site is centered on Hiawatha Avenue and East 28th Street, which was the location of a former arsenic-based pesticide manufacturer, and is listed on the National Priority List. The National Priority List is a federal list that identifies sites of known or threatened contamination that warrant either further investigation or clean-up activities. The Minnesota Department of Agriculture ("MDA") along with the U.S. Environmental Protection Agency ("EPA") assessed the contamination at the former plant site and in nearby neighborhoods. Between 2004 and 2008, hundreds of properties were cleaned up to address immediate health concerns (EPA, 2009).

The potential exists for encountering arsenic-contaminated soils during construction of all transmission route alternatives. Arsenic contaminated soils typically are not identifiable visually or by odor. Field instruments are available to quickly screen soils in the field for arsenic contamination. Workers with potential to be exposed to arsenic contaminated soils need dermal protection and possibly respiratory protection if potential concentrations are high enough. Dust suppression measures are particularly important during soil disturbing activities in areas of potential soil contamination.

For the overhead route alternatives, subsurface work would be confined to the transmission structure locations. However, for the underground route alternatives the entire route distance would be exposed, with the exception of those areas planned to be crossed by HDD.

Mitigative Measures

The Hiawatha Substation and Midtown Substation sites are within areas zoned as light industrial. A one-story, architecturally-designed, decorative walls will be constructed around three sides of the Hiawatha Substation, and an architecturally-designed, decorative wall will be constructed around the Midtown Substation. The walls will be designed to complement the surrounding structures.

The Company has standard policies and procedures for properly managing contaminated soils. These policies and legal obligations require crews to continually monitor for possible soil contamination during construction; procedures for segregating and disposing of contaminated soils, where necessary; and procedures for protecting worker health and safety in areas with a high probability for encountering contamination. Where necessary, the plans and procedures will be supplemented to address issues relating to the vacant lot and a residential home in the area of the Midtown North substation location. The residential home was registered as vacant on August 12,

2008, and was classified as condemned on September 10, 2008 according to the Minneapolis List of Boarded/Condemned Properties.

7.2.3 DISPLACEMENT

Adequate right-of-way must be acquired for safe operation of a transmission line. Displacement can be required when a residence or business is located within the required right-of-way. No displacement is anticipated as a result of construction of the transmission lines. However, construction of the substations could potentially require removal of existing structures and displacement. If the Midtown North site is selected, a condemned triplex will need to be removed. If the Midtown South site is selected, a warehouse complex owned by Brown Campbell will need to be removed. If the Hiawatha East site is selected a warehouse complex owned by Crew will need to be removed.

Mitigative Measures

Xcel Energy will work with the landowners subject to displacement and provide just compensation for the property and all required relocation benefits. All substation sites are located in areas zoned light industrial; therefore the removal of the condemned and abandoned triplex would not impact the City's housing plan for the area.

7.2.4 NOISE

Overhead transmission conductors produce noise under certain conditions. The level of noise depends on conductor conditions, voltage level and weather conditions. Generally, activity-related noise levels during the operation and maintenance of substations and transmission lines are minimal.

Noise emission from a transmission line occurs during certain weather conditions. In foggy, damp, or rainy weather, power lines can create a crackling sound due to the small amount of electricity ionizing the moist air near the wires. During heavy rain the background noise level of the rain is usually greater than the noise from the transmission line. As a result, people do not normally hear noise from a transmission line during heavy rain. During light rain, dense fog, snow and other times when there is moisture in the air, transmission lines can produce noise. Noise levels produced by a 115 kV transmission line are generally less than outdoor background levels and are therefore not usually audible. At substations, the source for noise is primarily the transformers which can create a humming noise.

Since human hearing is not equally sensitive to all frequencies of sound, the most noticeable frequencies of sound are given more "weight" in most measurement schemes. The A-weighted scale corresponds to the sensitivity range for human hearing. Noise levels capable of being heard by humans are measured in A-weighted decibels ("dBA"). A noise level change of 3 dBA is barely perceptible to human hearing. A 5 dBA change in noise level, however, is clearly noticeable. A

10 dBA change in noise level is perceived as a doubling of noise loudness, while a 20 dBA change is considered a dramatic change in loudness. Table 11 below shows noise levels associated with common, everyday sources.

TABLE 11
COMMON NOISE SOURCES AND LEVELS

Sound Pressure Level (dB)	Typical Sources
120	Jet aircraft takeoff at 100 feet
110	Same aircraft at 400 feet
90	Motorcycle at 25 feet
80	Garbage disposal
70	City street corner
60	Conversational speech
50	Typical office
40	Living room (without TV)
30	Quiet bedroom at night

Source: Environmental Impact Analysis Handbook, ed. by Rau and Wooten, 1980

In Minnesota, statistical sound levels (L Level Descriptors) are used to evaluate noise levels and identify noise impacts. The L_5 is defined as the noise level exceeded 5% of the time, or for three minutes in an hour. The L_{50} is the noise level exceeded 50% of the time, or for 30 minutes in an hour.

The Minnesota Pollution Control Agency ("MPCA") noise standards are consistent with speech, sleep, annoyance and conversation requirements for receivers based on the present knowledge for preservation of public health and welfare. Similar land uses have been grouped and classified using the State's noise area classification ("NAC") system. Residential areas, churches and similar type land use activities are included in NAC 1; commercial-type land use activities are included in NAC 2; and industrial-type land use activities are included in NAC 3.

Table 12 identifies the established daytime and nighttime noise standards by NAC. The standards are expressed as a range of permissible dBA within a one hour period; L_{50} is the dBA that may be exceeded 50 percent of the time within an hour, while L_{10} is the dBA that may be exceeded 10 percent of the time within the hour.

TABLE 12
NOISE STANDARDS BY NOISE AREA CLASSIFICATION
(Units in dBA)

Noise Area Classification	Daytime		Nighttime	
	L_{50}	L_{10}	L_{50}	L_{10}
1	60	65	50	55
2	65	70	65	70
3	75	80	75	80

Both the Hiawatha and Midtown Substations will be located in areas zoned as light industrial districts (NAC 3). The nearest occupied home to proposed Hiawatha Substation is greater than 200 feet away, and the nearest home to the proposed Midtown Substation is approximately 20 feet away.

The potentially affected residences fall within NAC 1. The noise generated from the transmission lines is not expected to exceed the background noise levels and would therefore not be audible at any receptor location. In addition, noise levels would be well below the noise standards established for NAC 1, as shown in Table 12 above.

The City of Minneapolis has established noise ordinances under its Code of Ordinances Title 15, Chapter 389. Besides incorporating by reference the MPCA's noise standards, the City of Minneapolis ordinances prohibit activities which generate sound, regardless of frequency, that is more than 10 dBA above the ambient noise level when measured within any dwelling unit. The noise ordinance also provides maximum permitted sound levels in decibels by octave band frequency, which apply to the boundary of a residence or business district. The Company will ensure that the noise at the substations does not exceed the levels established in the noise ordinances.

In addition to the noise ordinances presented above, the City of Minneapolis prohibits the operation of construction equipment within the city between the hours of 6:00 p.m. and 7:00 a.m. on weekdays or during any hours on Saturdays, Sundays and federal holidays, except as allowed by permit for a specific project. Depending upon the alternative chosen, the Company may request a permit for after-hours construction for specific activities, such as road crossings.

Mitigative Measures

The Hiawatha Substation and the Midtown Substation will be surrounded by a decorative wall which will aid in mitigating noise generated by the operation of the two substations. The Company will place sound absorbing panels on the walls around the Midtown North Substation as necessary to meet City of Minneapolis and MPCA noise requirements.

7.2.5 TELEVISION AND RADIO INTERFERENCE

Corona from transmission line conductors can generate electromagnetic "noise" at the same frequencies that radio and television signals are transmitted. This noise can cause interference with the reception of these signals depending on the frequency and strength of the radio and television signal. Tightening loose hardware on the transmission line usually resolves the problem.

If radio interference from transmission line corona does occur, satisfactory reception from AM radio stations presently providing good reception can be obtained by appropriate modification of (or addition to) the receiving antenna system. Moreover, AM radio frequency interference typically occurs immediately under a transmission line and dissipates rapidly within the right-of-way to either side.

FM radio receivers usually do not pick up interference from transmission lines because:

- Corona-generated radio frequency noise currents decrease in magnitude with increasing frequency and are quite small in the FM broadcast band (88-108 Megahertz), also
- The excellent interference rejection properties inherent in FM radio systems make them virtually immune to amplitude type disturbances.

A two-way mobile radio located immediately adjacent to and behind a large metallic structure (such as a steel tower) may experience interference because of signal-blocking effects. Movement of either mobile unit so that the metallic structure is not immediately between the two units should restore communications. This would generally require a movement of less than 50 feet by the mobile unit adjacent to a metallic tower.

Television interference is rare but may occur when a large transmission structure is aligned between the receiver and a weak distant signal, creating a shadow effect. Loose and/or damaged hardware may also cause television interference. If television or radio interference is caused by or from the operation of the proposed facilities in those areas where good reception is presently obtained, the Company will inspect and repair any loose or damaged hardware in the transmission line, or take other necessary action to restore reception to the present level, including the appropriate modification of receiving antenna systems if deemed necessary.

Mitigative Measures

No impacts are anticipated. If radio or television interference occurs because of the transmission line, the Company will work with the affected landowner to restore reception to pre-Project quality.

7.2.6 AESTHETICS

Overhead Transmission

The proposed structures for the 115 kV lines from the Midtown Substation to the Hiawatha Substation will be either single or double circuit construction, depending upon which route is chosen. The single circuit structures will be similar to the existing single circuit transmission lines located on the east side of Hiawatha Avenue. Both the double circuit and single circuit structures will be between 75 and 80 feet in height, although some will reach 100 to 115 feet in height where the line crosses transportation corridors. The poles will have an average span of approximately 500 feet between the structures, although some smaller spans have been proposed based upon existing features in the Project Area. Structures can be placed to minimize direct aesthetic impacts (e.g., avoid placement of poles directly in front of buildings). The Company will minimize direct impacts where practical.

The majority of the structures in the Project Area range in height from one to three stories; however, taller commercial, industrial and residential buildings are present. The tallest building in the Project Area is the central tower of the Midtown Exchange building, which is 16 stories (approximately 210 feet) in height. The majority of the Project Area contains existing overhead electrical distribution lines. However, the height of these structures is less than the proposed height of the single and double circuit transmission structures.

Underground Transmission

The construction of the underground transmission line would cause temporary ground disturbance to the Project Area. However, the disturbance would be limited to the construction period. Once the transmission line was in operation, it would not have an impact on the aesthetics of the Project Area. However, if the underground transmission lines and duct system would have to be relocated at a future date to accommodate new development, the resulting relocation would create additional aesthetic impacts to the Project Area, would be very costly, requiring Xcel Energy to pay for new construction of underground transmission facilities, and would temporarily put at higher risk the electrical supply to south Minneapolis area. The underground route alternatives have been chosen to minimize the risk of future relocation.

Substation Siting

The Hiawatha Substation will be a low-profile substation, with an average height of approximately 20 feet. The Hiawatha Substation will be located in an area characterized by light industry, major transportation corridors such as Hiawatha Avenue and commercial retail development. The substation will be visible from these features.

The Midtown Substation will be a high-profile substation, with an average height of approximately 45 feet, which allows the substation to occupy a smaller footprint. The majority of the property proposed for the preferred Midtown Substation site (Midtown North) was historically a substation. Therefore, the Midtown Substation will not significantly change the character of the site. However, the Midtown Substation will be larger than former Oakland Substation and will be visible by nearby properties.

Because of the close proximity of the alternative Hiawatha Substation and Midtown Substation sites to the proposed sites, the aesthetic impacts of locating the two substations at the alternative sites would be similar.

Mitigative Measures

Although the line will be a contrast to some surrounding land uses, the Company has identified route alternatives that utilize existing corridors and avoid sensitive cultural and institutional resources to the greatest extent practicable. The Company will work with landowners to identify concerns related to the transmission lines.

To mitigate visual impacts of the proposed transmission lines, the Company would re-locate the existing distribution lines along the 29th Street/HCRRA corridor and place them underground if Route A overhead design is selected. If either Route B or Route C is selected, the Company would remove select distribution structures along the selected route and support the distribution lines on the proposed transmission structures.

To mitigate visual impacts of the Hiawatha and Midtown substations, the Company will construct one-story decorative wall surrounding the Hiawatha Substation on three sides and a one-story decorative wall surrounding the Midtown Substation. The walls will be architecturally-designed to complement the existing character of the Project Area.

7.2.7 SOCIOECONOMIC

Population and economic characteristics based on the 2000 U.S. Census are presented in Table 13.

TABLE 13
POPULATION AND ECONOMIC CHARACTERISTICS

Location	Population	Minority Population (Percent)	Caucasian Population (Percent)	Per Capita Income	Percentage of Population Below Poverty Level
State of Minnesota	4,919,479	10.6%	89.4%	$23,198	7.90%
Hennepin County	1,116,200	19.5%	80.5%	$28,789	8.30%
City of Minneapolis	382,618	34.9%	65.1%	$22,685	16.92%
Central Neighborhood	8,150	74.3%	25.7%	$11,400	29.49%
Corcoran Neighborhood	4,228	47.1%	52.9%	$15,700	15.70%
Longfellow Neighborhood	4,972	28.7%	71.3%	$19,100	9.36%
Phillips Neighborhood	19,805	68.4%	31.6%	$10,200	32.33%
Powderhorn Park Neighborhood	8,957	50.1%	49.9%	$8,957	14.56%
Seward Neighborhood	7,174	34.9%	65.1%	$19,200	26.99%

Source: 2000 U.S. Census: General Demographic Characteristics and City of Minneapolis Community Planning and Economic Development Department

According to the 2000 Census race demographics, Hennepin County is 80.5 percent Caucasian. Of the neighborhoods within the Project Area, the population ranges from 25.7 to 65.1 percent Caucasian. Minority groups in the area constitute a large percentage of the total population.

Per capita incomes within the neighborhoods in the Project Area are, in general, lower than those found throughout Hennepin County and the percentage of population below poverty level is generally higher than those found throughout Hennepin County.

Table 14 presents the average residential property values for the properties within or directly adjacent to each of the route alternatives. The estimate of residential property values includes apartments, condominiums, housing cooperatives and multi-family properties (*e.g.*, duplex, triplex, *etc.*). Route B has several outliers in the property value data because there are two large apartment

complexes along the route (2700 and 2615 Park Avenue), which when included skew the data to present a higher average property value. Data with and without the outliers are presented in Table 14.

TABLE 14
AVERAGE RESIDENTIAL ASSESSED PROPERTY VALUES

Average Property Value	Route A	Route B	Route C	Route D
Average Total Value	$294,784	$235,723	$227,280	$214,893
Average Total Value (excluding outliers)	N/A	$168,785	N/A	N/A
N/A – not applicable. No apparent outliers.				

Source: Hennepin County Survey Division, 2009 Total Assessed Market Value

The Project is being proposed to meet growing demand in the Project Area, as demonstrated by the Project need described in Section 3.2.3. The economic characteristics of the Project Area did not influence the Company's siting or routing decisions associated with the Project. The Company has existing transmission lines and substations sited in areas of high and low per capita income throughout the city of Minneapolis and Hennepin County. The residents and users within the Project Area will be serviced by the electricity transmitted along the proposed lines. Therefore, the residents and users within the Project Area will directly benefit from the Project. No significant adverse impacts are anticipated to minority or low-income populations.

Approximately four to six workers will be required by the Company for transmission line construction. The transmission crews are expected to spend approximately 15 weeks constructing the transmission line. During construction, there will be a small positive impact on the community due to the expenditures of the construction crews in the local community.

Mitigative Measures

No impacts are anticipated and therefore no mitigative measures are proposed.

7.2.8 CULTURAL VALUES

The Midtown area in South Minneapolis is an area rich in cultural diversity. Route A crosses several neighborhoods and parallels the Minneapolis Midtown Greenway, a corridor reserved for future rail use. It is currently a dual-lane path used by cyclists, joggers, walkers, skateboarders and in-line skaters. It is most heavily traveled in the summer and surrounding months.

While many cultures call the Midtown area home, the area is diverse not only in ethnicity but in age, class and race. Lake Street, a main street that runs through the heart of the Midtown area, hosts businesses including East and West African, East Asian, Latino, Scandinavian, small-scale ethnic enterprises, as well as large American chains. Large, early turn of the century homes intermingle with more recent housing developments. Large big-box businesses such as K-Mart and Cub Foods are adjacent to foreign-import family owned shops. Minneapolis public schools and private religious and art schools and the Swedish Institute are located within the Midtown area. The area is also home to major employers including Abbot Northwestern Hospital and Wells Fargo Home Mortgage. Several museums are also located within or near the Midtown area. Recent community revitalization projects have helped transform the area making it more attractive to business investors and homeowners alike. Continued population and business growth is expected in the Midtown neighborhoods.

Mitigative Measures

No impacts are anticipated to cultural values. Therefore no mitigative measures are proposed.

7.2.9 RECREATION

Minneapolis Park and Recreation Board has 15 properties within 0.5 miles of the Project Area. Recreational opportunities within the Project Area include Stewart Park, 2529 13th Ave South Property, Cedar Avenue Field and Powderhorn Park (Minneapolis Park and Recreation Board, 2009).

Amenities at Stewart Park include a playground, baseball and softball fields, wading pool and recreation center. Cedar Avenue Field provides picnic and playground activities. The 2529 13th Ave South Property includes the White Neighborhood House, a playground and gardens. Powderhorn Park is the largest park in the neighborhood covering 65 acres of land and holds several events each year including the annual 4th of July Celebration, May Day Festival and the Powderhorn Arts Festival. Powderhorn Park also offers many amenities including a bandstand, several athletic fields and courts, fishing dock, garden, ice rink, picnic area, playground, wading pool, walking path and recreation center.

The Midtown Greenway, located within HCRRA property, crosses through the Project Area. The Midtown Greenway is currently used as a 5.7-mile shared bicycle and pedestrian corridor that travels through the city of Minneapolis from the St. Louis Park city limits in the west to West River Parkway near the Mississippi River in the east. Average daily bicycle trips during 2007 and 2008 in the vicinity of the Project ranged from 143 to 3,129 (Midtown Greenway Count Report, July 2008).

Facilities constructed along Route A, whether overhead or underground design, would not be visible from or located adjacent to any parks. However, the majority of transmission lines would be located on or adjacent to HCRRA property. The proposed alignment within Route A for the facilities is on the top slope of the HCRRA property. The majority of the Midtown Greenway is located at the

bottom of the railroad bed. If overhead construction were used, portions of the line along Route A will be visible from the Midtown Greenway. The operation of Route A will not interfere with or directly impact the existing uses of the Midtown Greenway. As previously discussed, the overhead structures will be comprised of galvanized steel to blend in with the recent modernization of the area. Xcel Energy understands there are concerns in the community about aesthetic impacts on recreation, especially along the Midtown Greenway. While the Company understands the concern, bicycle paths adjacent to transmission facilities are not uncommon. Figure 23 shows an overview map of bicycle paths and transmission facilities in the seven county metropolitan area, additional detail is available in Appendix B.15.

Portions of Route B are adjacent to Stewart Park and 2529 13th Avenue Property. The facilities would likely be visible from Cedar Avenue Field. Transmission facilities constructed on portions of Route C Route would likely be visible from Powderhorn Park. The Hiawatha Project will not disturb areas within parks, interfere with existing uses, or otherwise directly impact these resources.

Mitigative Measures

The Company does not believe any impacts to recreation exist. Therefore, no mitigative measures are proposed.

7.2.1 PUBLIC SERVICES

The City of Minneapolis provides typical public infrastructure (water, sewer and storm water management) to the community. It is not anticipated that the Project will affect these public services.

Temporary road closings will be required during the construction phase of the Project. The duration and details of the road closings will be based upon the route selected and conditions encountered in the field. The Company will continue to work with the City to minimize conflicts as plans become more defined.

The proposed routes run adjacent to or cross the HCRRA/Greenway Corridor. Future plans for this area include light rail development. The Company has reviewed publicly available plans for the corridor and has designed the project to avoid impacting future use. There area a few cases where the proposed transmission structures may be adjacent to the future light rail electrical wires, this will not interfere with or prevent operation of the light rail cars. The current 115 kV line along Hiawatha parallels the light rail corridor and there have not been any impacts Project staff are aware of.

Mitigative Measures

It is not anticipated the Project will impact any public services. The Company will minimize road closings by closing one lane at a time. No impacts to the planned/potential road projects are anticipated and therefore no mitigative measures are proposed.

FIGURE 23
BICYCLE PATHS AND TRANSMISSION FACILITIES IN THE 7-COUNTY METROPOLITAN AREA

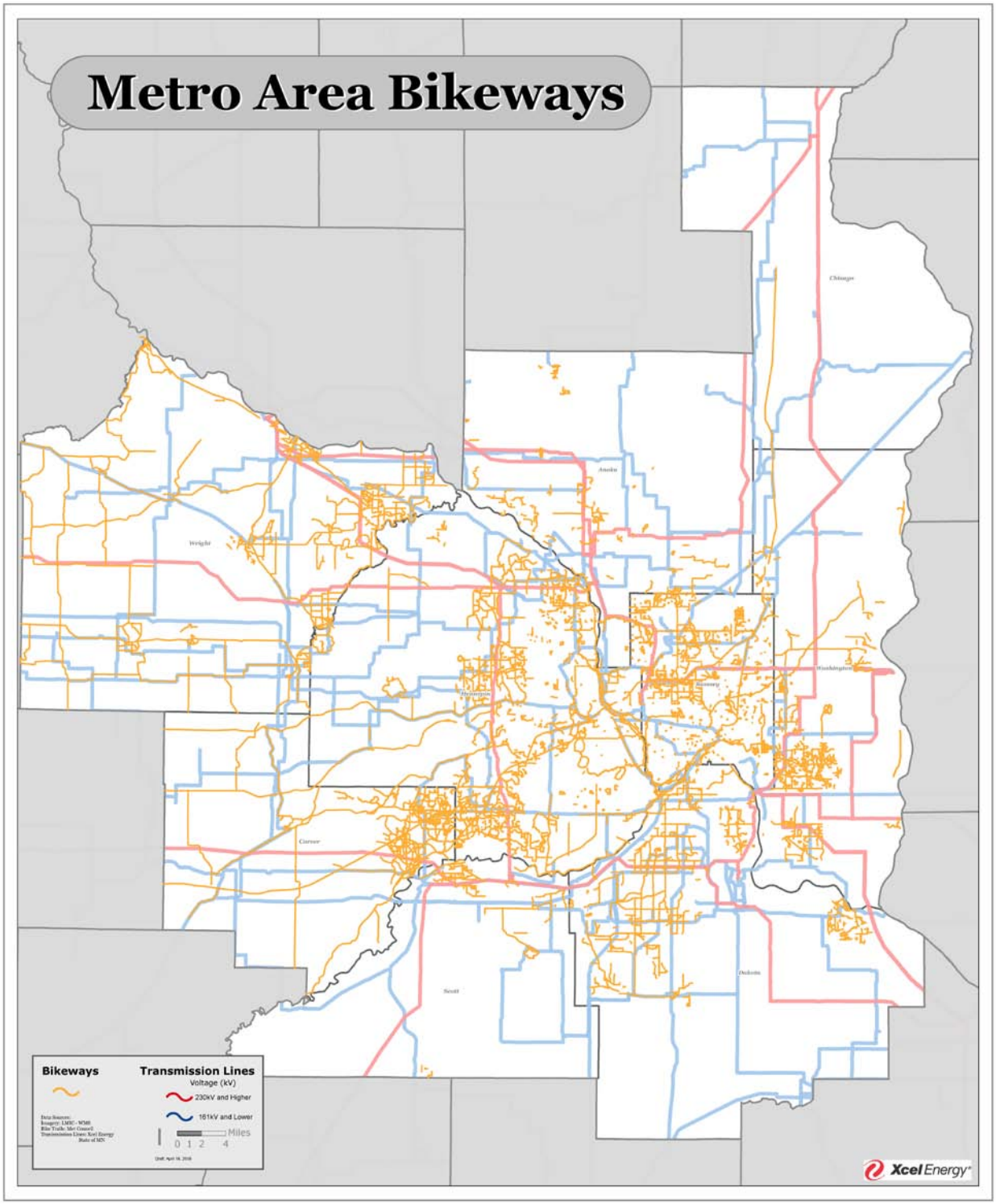

7.3 LAND-BASED ECONOMICS

7.3.1 AGRICULTURE, FORESTRY AND MINING

As the Project is located in a highly developed, urban area, there are no existing forestry or mining activities that occur within the Project Area. No commercial agriculture occurs within the Project Area. There are several community gardens within the Project Area. These community gardens include Prairie Oaks Community Garden at 2600 Oakland Avenue South, 12th and 13th Avenue Block Club Garden, Shalom Garden and Walker Church Community Garden 3104 16th Avenue South.

Route A is not located adjacent to any community gardens. Route B is located adjacent to the Prairie Oaks Community Garden. Route C is located adjacent to the Walker Church Community Garden, which incorporates youth programming, education, food production and individual garden plots. Route D is not located adjacent to any community gardens.

The Project will not disturb areas within community gardens or directly impact these resources.

Mitigative Measures

No impacts are anticipated and therefore no mitigative measures are proposed.

7.3.2 TOURISM

Several retail stores, museums, theaters and restaurants draw visitors to the area. These attractions include the Midtown Global Market, Lake Street shops and restaurants, the Sheraton Minneapolis Midtown Hotel, In the Heart of the Beast Puppet and Mask Theatre, the American Swedish Institute and the Midtown Greenway.

None of the alternatives interfere with existing uses or otherwise directly impact these resources. Potential visual affects are discussed in Sections 7.2.6 and 7.4.2.

Mitigative Measures

No impacts are anticipated and therefore no mitigative measures are proposed.

7.4 ARCHAEOLOGICAL AND HISTORIC RESOURCES

7.4.1 CULTURAL RESOURCE ASSESSMENT

The Company completed a cultural resources assessment for the Project to determine the potential for impacts to cultural resources within the various route alternatives. The purpose of the cultural resources assessment was to identify known cultural resource properties and the potential for previously unidentified cultural resource properties that may be significant to inform the route

selection process. The investigation consisted of a review of the SHPO inventory database to identify previous surveys, archaeological sites and inventoried architectural history properties within the Project Area. For the cultural resource assessment, the Project Area was defined as the area along and south of 26th Street, along and east of Portland Avenue, along and north of 31st Street and west of Minnehaha and 26th avenues. The inventory of architectural history properties at the Minneapolis HPC was also reviewed to identify additional properties recorded for local surveys. The "800 List" is a list of historic properties and areas that have been locally designated by the Minneapolis HPC for their historical significance as part of their heritage preservation protection program. Properties listed on the 800 List may also be determined eligible for or listed for the National Register of Historic Properties ("NRHP"). Other research included investigation of secondary sources, and a review of a variety of historical maps, including original General Land Office survey maps, Sanborn Fire Insurance Maps, Rascher Insurance Maps and historical aerial photographs. A copy of the cultural resource assessment is included in Appendix E.

There is potential for the Project to cause direct effects to below ground archaeological resources for the underground alternatives, the overhead alternatives (where the poles are placed) and for substations. The assessment of an area's potential to contain archaeological resources is based on the analysis of the terrain, water sources and other natural resources, as well as the built environment in and adjacent to that area. Permanently wet areas (*e.g.*, wetlands and streams), poorly drained areas and areas with slopes greater than 20 percent are generally considered inhospitable to human occupation, so these are considered to have low potential for containing archaeological sites. No known archaeological resources exist in the area, therefore the project potential for impact is very low.

Additionally, the erection of transmission towers to carry the overhead transmission lines may have visual (indirect) effects to cultural resources with the potential to alter or impair character-defining features. Built-up urban areas tend to limit views of tall structures, such as utility poles, and these poles would be unlikely to have adverse effects to the historic character of an urban property from longer distances. For these reasons, the cultural resources assessment used a 0.1-mile buffer around each corridor alternative to assess the visual effects to known and unknown architectural history properties.

Table 15 presents the known cultural resource properties that may be aesthetically impacted by the various route and substation alternatives of the Project. This table includes properties listed or potentially eligible for the NRHP as well as properties listed on the HPC's 800 List. The cultural resources and recommended survey and mitigation measures for each alternative are discussed in greater detail below.

TABLE 15
CULTURAL RESOURCES POTENTIALLY IMPACTED BY ROUTE AND SUBSTATION ALTERNATIVES

Name	NRHP Listed	NRHP Eligible	800 List
Route A	**8**	**4**	**3**
Route B	**9**	**5**	**11**
Route C	**7**	**5**	**10**
Route D	**0**	**0**	**0**
Hiawatha Substation Sites	**0**	**0**	**0**
Midtown Substation Sites	**3**	**1**	**0**

Source: Cultural Resources Assessment, January 2009

7.4.2 ARCHITECTURAL RESOURCES

Route A

The cultural resources assessment identified eight historic properties listed on the NRHP, four historic properties that are eligible for the NRHP, and three historic properties listed on the HPC's 800 List within Route A (See Table 15). Route A is located within a NRHP historic district. There may be other unevaluated historic resources present based on the contextual history of the proposed route. However a cultural resources survey will be conducted on the final route chosen by the Commission. The following themes have been identified as possessing potential for historic associations. Between 1880 and 1920 historic occupants of the area along Route A ranged from wealthy citizens who erected large, high-style mansions on Park Avenue, which crosses through this route, to workers from local industries who were housed in modest cottages in the Phillips neighborhood, in which Route A is located. Good examples of residences representing these associations may exist within the visual area of potential effect and could have potential for historical significance.

Likewise, portions of the alternative routes were popular enclaves for Swedish and Norwegian immigrant communities. Examples of houses, churches, social institutions and districts representing these associations may have potential historic significance. In general, Route A contains historic and cultural institutions and facilities, such as churches, social halls, theaters and hospitals that may have historic significance alongside new, modern buildings and structures. Route A also contains remnants of important industries, such as the Minneapolis Moline plant, the nearby Honeywell

facility and the Chicago, Milwaukee & St. Paul ("CM&StP") rail yards, which employed many residents of the area at some time. Intact remnants of these industries, ancillary businesses, or associated residential dwellings may exist within the route and have historic significance. The area near Route A was shaped by transportation systems, including the CM&StP Benton Cutoff and grade separation, the convergence of rail lines in the vicinity of Hiawatha and East 28th Street, the streetcar lines which traversed Lake Street and several north-south routes and later the construction of Interstate 35W just to the west of the Route A. Related resources may have historic significance.

Route B

The cultural resources assessment identified nine historic properties listed on the NRHP, five historic properties that are eligible for the NRHP and 11 historic properties listed on the HPC's 800 list within this alternative (See Table 15). The likelihood exists of other unevaluated historic resources to be present based on the contextual history of this alternative. The following themes, discussed in greater detail above, have been identified as possessing potential for historic associations within the alternative. The alternative potentially impacts cultural resources associated with Park Avenue, the Phillips neighborhood, Swedish and Norwegian immigrant communities, historic and cultural institutions and facilities, industries such as the Minneapolis Moline plant, the nearby Honeywell facility and the CM&StP rail yards, the CM&StP Benton Cutoff and grade separation, the streetcar lines and later the construction of Interstate 35W just to the west of the alternative. Lastly, Lake Street is in viewshed of this alternative, which served as an important commercial corridor. Many associated historic properties have been or may be determined eligible along this corridor.

Route C

The cultural resources assessment identified seven historic properties listed on the NRHP, five historic properties that are eligible for the NRHP and 10 historic properties listed on the HPC's 800 list within this alternative (See Table 15). The likelihood exists of other unevaluated historic resources to be present based on the contextual history of this alternative. The following themes, discussed in greater detail above, have been identified as possessing potential for historic associations within the alternative. The alternative potentially impacts cultural resources associated with Park Avenue, the Powderhorn Park neighborhood, the Phillips neighborhood, Swedish and Norwegian immigrant communities, historic and cultural institutions and facilities, industries such as the Minneapolis Moline plant, the nearby Honeywell facility and the CM&StP rail yards, the CM&StP Benton Cutoff and grade separation, the streetcar lines, the Lake Street commercial corridor and later the construction of Interstate 35W just to the west of the alternative.

In addition, many areas within or near the alternative contain historic resources that may have significance for their part in the residential development of the area. Properties in the 3000 block of 17th Avenue South have been previously recommended as an important representation of brick

workers housing. Powderhorn Lake and Park and the 3100 block of 11th Avenue South and 3100 block of 10th Avenue South may have significant associations with local development. Apartment flats on Powderhorn Terrace and 12th Avenue South north of Powderhorn Park, 14th Avenue South east of the park and others throughout the neighborhood have potential for NRHP listing or local designation. The 1700 block of East 31st Street contains a series of four parged stone houses that are unique to the neighborhood and may be historically significant. A grouping of residences on the 3100 block of Minnehaha Avenue may possess historic significance as examples of early twentieth century worker cottages built for employees of the nearby Minneapolis Steel and Machinery Company.

Route D

Underground transmission lines would have minimal or no effects to most architectural history resources. As proposed, this underground alternative would be placed within right-of-way and likely would not cause adverse effects to architectural history properties or landscapes.

Hiawatha Substation Sites

The proposed and alternative Hiawatha substation sites are to be located in an area that has been significantly redeveloped in recent years. It does not appear to contain historic properties or to be proximate to historically significant properties. Although rail spurs are existent within this area, it does not appear within the alignment of the CM&StP's main line of its Short Line route, an unevaluated rail corridor with potential historic significance. Most of the rail facilities within this area, such as the CM&StP rail yards, have been removed.

Midtown Substation Sites

The Midtown North and Midtown South sites are adjacent to the CM&StP Railroad Grade Separation historic district on its north or south sides. A portion of the north site was the location of the former Oakland Substation, present since at least the 1950s. Construction of another transformer yard, now called a Substation, at the proposed site would not have significant direct impacts to historic resources. Midtown South would be constructed on the site of a former auto sales and service building and curling club. This property was determined not eligible for the NRHP as part of the Midtown Greenway investigation (See Appendix E).

In addition, the cultural resources assessment identified three historic properties listed on the NRHP and one historic property that is eligible for the NRHP (See Table 15). The likelihood exists of other unevaluated historic resources to be present based on the contextual history of this alternative. As discussed above, the following themes have been identified as possessing potential for historic associations within the alternative. The alternative potentially impacts cultural resources associated with Park Avenue, the Phillips neighborhood, Swedish and Norwegian immigrant communities, historic and cultural institutions and facilities, industries such as the Minneapolis Moline plant, the

nearby Honeywell facility, the CM&StP rail yards, the CM&StP Benton Cutoff and grade separation, the streetcar lines, the Lake Street commercial corridor and later the construction of Interstate 35W just to the west of the alternative.

The proposed Midtown North high-profile substation, with an average height of 45 feet, would result in visual effects to surrounding properties for both the north and south alternatives. Many of the immediately surrounding properties have not been evaluated for potential NRHP eligibility. Landscaping or other screening devices appropriate to the industrial and residential setting of the substation will be used to avoid or mitigate potential adverse effects to surrounding historic properties. The Midtown South substation is proposed as a low-profile substation and would have fewer visual impacts than the Midtown North substation.

Mitigative Measures

To determine the full extent of architectural history resources that may be impacted, the Company will conduct a pedestrian level cultural resources survey of the route selected. The information gather during the cultural resources survey will be used to further minimize aesthetic impacts to architectural resources (*e.g.,* poles will be placed adjacent to buildings rather than in front). The Hiawatha Substation will be constructed with a one-story decorative wall surrounding the substation on three sides, and the Midtown Substation will be constructed with a decorative wall surrounding the substation. The walls will be architecturally-designed to complement the existing character of the Project Area.

7.4.3 ARCHAEOLOGICAL RESOURCES

Route A

Because Route A historically did not exhibit any topographically prominent features and was located at a considerable distance from any water sources or wetlands, it is considered to have low potential for containing precontact archaeological resources. Further, based on the substantial urban development that has occurred in this route since the precontact period, it is unlikely that any potential precontact archaeological resources would remain intact. Although Route A runs through the CM&StP district, any potential archaeological resources associated with this type of resource within the alternative is unlikely to retain sufficient integrity to be eligible for listing in the NRHP, and therefore no archaeological work is recommended for this resource. Based on the pre-urbanization landscape of the route, early (pre-1850) historical archaeological sites are not likely to be present within the alternative. As currently planned, Route A is located primarily within existing rights-of-way for these streets. The rights-of-way were undoubtedly previously disturbed by road construction and the installation of other utilities, such as water mains, and are therefore unlikely to contain intact historical archaeological resources.

Route B

The Route B alternative historically did not exhibit any topographically prominent features and was located at a considerable distance from any water sources or wetlands. It is considered to have low potential for containing precontact archaeological resources. Based on the pre-urbanization landscape of the alternative, early (pre-1850) historical archaeological sites are not likely to be present within the alternative. As currently planned, the alternative runs primarily within existing rights-of-way for these streets.

Route C

The Route C alternative historically did not exhibit any topographically prominent features and was located at a considerable distance from any water sources or wetlands. It is considered to have low potential for containing precontact archaeological resources. Although this alternative runs through the CM&StP district, any potential archaeological resources associated with this type of resource within the alternative is unlikely to retain sufficient integrity to be eligible for listing in the NRHP, and therefore no archaeological work is recommended for this alternative. Based on the pre-urbanization landscape of the alternative, early (pre-1850) historical archaeological sites are not likely to be present within the alternative. As currently planned, the alternative runs primarily within existing rights-of-way for these streets.

Route D

The Route D alternative historically did not exhibit any topographically prominent features and was located a considerable distance from any water sources or wetlands. It is considered to have low potential for containing precontact archaeological resources. Although this alternative runs through the CM&StP district, any potential archaeological resources associated with this type of resource within the alternative is unlikely to retain sufficient integrity to be eligible for listing in the NRHP, and therefore no archaeological work is recommended for this alternative. Based on the pre-urbanization landscape of the alternative, early (pre-1850) historical archaeological sites are not likely to be present within the alternative. As currently planned, the alternative runs primarily within existing rights-of-way for these streets.

Hiawatha Substation Sites

The proposed and alternative Hiawatha Substation sites extend north and south of 28th Street. The north portion was previously occupied by the CM&StP shops and has been heavily disturbed by the construction of Hiawatha/Highway 55 and new industrial construction. The south portion was occupied by multiple railroad tracks of the CM&StP, and is therefore not likely to contain archaeological resources.

Midtown Substation Sites

The proposed Midtown North Substation site north of 29th Street/HCRRA Corridor was historically occupied by a coal yard and coal bins and subsequently by a transformer yard, and it would therefore be unlikely to contain archaeological resources. The Midtown South site was occupied by the former Minneapolis Curling Club. This location is also considered to have low potential for containing archaeological resources.

Mitigative Measures

Because the Project Area did not exhibit any topographically prominent features and was located at a considerable distance from any water sources or wetlands and the proposed routes would be sited in areas documented as previously disturbed, it is considered to have low potential for containing precontact archaeological resources.

If human remains should be inadvertently encountered during the excavation and construction, the Company will appropriately handle such a discovery in a manner compliant with Minnesota's Private Cemeteries Act (Minn. Stat. § 307.08).

7.5 NATURAL ENVIRONMENT

7.5.1 AIR QUALITY

Currently, both state and federal governments have regulations regarding permissible concentrations of ozone and nitrogen dioxide ("NO_2"). The National Ambient Air Quality Standards ("NAAQS") and Minnesota Ambient Air Quality Standards ("MAAQS") for these compounds are presented in Table 16.

TABLE 16
NATIONAL AND MINNESOTA AMBIENT AIR QUALITY STANDARDS

Pollutant	Level	Averaging Time
Nitrogen Dioxide	0.053 ppm	Annual (Arithmetic Mean)
Ozone	0.075	8-hour

Source: EPA, 2009a

The only potential air emissions from a 115 kV transmission line result from corona and are limited. Corona consists of the breakdown or ionization of air in a few centimeters or less immediately surrounding conductors, and can produce ozone and oxides of nitrogen in the air surrounding the

conductor. For a 115 kV transmission line, the conductor gradient surface is usually below the air breakdown level. Typically, some imperfection such as a scratch on the conductor or a water droplet is necessary to cause corona. Ozone is not only produced by corona, but also forms naturally in the lower atmosphere from lightning discharges and from reactions between solar ultraviolet radiation and air pollutants such as hydrocarbons from auto emissions. The natural production rate of ozone is directly proportional to temperature and sunlight and inversely proportional to humidity. Thus, humidity (or moisture), the same factor that increases corona discharges from transmission lines, inhibits the production of ozone. Ozone is a very reactive form of oxygen and combines readily with other elements and compounds in the atmosphere. Because of its reactivity, it is relatively short-lived. All portions of the Project Area are designated as in attainment for the NAAQS and MAAQS.

During construction of the proposed transmission line, there will be limited emissions from vehicles and other construction equipment and fugitive dust from right-of-way clearing. Temporary air quality impacts caused by construction-related emissions are may occur during this phase of activity.

The magnitude of the construction emissions is influenced heavily by weather conditions and the specific construction activity occurring. Exhaust emissions, primarily from diesel equipment, will vary according to the phase of construction, but will be minimal and temporary. Adverse impacts to the surrounding environment will be minimal because of the short and intermittent nature of the emission and dust-producing construction phases.

Mitigative Measures

The Company anticipates nominal impacts to air quality. Therefore, no mitigative measures are proposed.

7.5.2 WATER RESOURCES

No waterbodies are located within the Project Area. The waterbody nearest to the Project Area is Powderhorn Lake, located approximately 0.2 miles south of the 31st Street portion of Route C Route alternative. There are no NWI wetlands located within the Project Area. An NWI map of the Project Area is attached as Appendix B.13. Direct impacts to the surface water resources are not anticipated as a result of the Project.

During construction there is the possibility of sediment reaching the Minneapolis storm water sewer system as construction activities disturb the ground. Once the Project is complete substations may contribute to storm water runoff directed to the storm water sewer system.

The Project Area is located within the Minnehaha Creek Watershed District ("MCWD").

Mitigative Measures

The Company will follow standard erosion control measures identified in the MPCA's Stormwater Best Management Practices Manual, such as using silt fencing to minimize impacts to water resources.

As the Project Area is greater than one acre it is subject to the requirements of the NPDES/State Disposal System ("SDS") Construction Stormwater General Permit ("General Permit"). The Company will obtain a General Permit from the MPCA and comply with all applicable requirements.

The Project Area will also disturb greater than 5,000 square feet of top soil and is, therefore, subject to the City of Minneapolis Erosion and Sediment Control for Land Disturbance Activities Ordinance and the MCWD Rule B. The Company will obtain an Erosion and Sediment Control Permit from the City of Minneapolis and prepare an Erosion and Sediment Control Plan for review by the City of Minneapolis. The Company will also obtain an Erosion Control Permit from the MWCD and comply with all applicable requirements.

7.5.3 FLORA

Because the majority of the routes are located within public rights-of-way, impacts to existing vegetation will be minor. Impacts to trees will likely occur based upon the transmission alternative that is selected. For the overhead route alternatives, trees may need to be removed depending upon the placement of the transmission structures. Most trees beneath the transmission line currently have been trimmed down because of existing overhead distribution lines, with the exception of Route C, which would require the removal of three mature American elm trees. Additional trimming may be required to ensure that tree growth does not interfere with the transmission lines. A small number of trees may be removed along the transmission lines where it seems likely that the tree, due to age or health, may fall on to the transmission facilities. For the underground route alternatives, trees within the construction trench would be removed or significantly impacted prior to construction. Tree impacts for underground design were conservatively estimated to include potential impacts to trees near sidewalks, to account for all potential impacts.

For the purposes of this analysis, trees were defined by species (*i.e.,* shrub species such as Eastern hemlock were not included) and a height greater than 10 feet. Table 17 presents the estimated number of trees that would be removed with each route alternative.

TABLE 17
NUMBER OF TREES TO BE REMOVED/SIGNIFICANTLY IMPACTED

	Route A, Overhead Design	Route A Underground design	Route B	Route C	Route D 28th Street Underground Route	Hiawatha Substation		Midtown Substation	
						West	East	North	South
Deciduous Trees	5	2	7	16	43	4	0	1	1
Coniferous Trees	0	0	1	3	0	1	0	0	0
Total Trees Removed	5	2	8	19	43	5	0	1	1

Source: City of Minneapolis

Mitigative Measures

To minimize impacts to trees in the Project Area, the Company will only remove trees located in the right-of-way for the transmission line, or those that would impact the safe operation of the facility. Trees outside the right-of-way that would need to be removed include trees that are unstable and could potentially fall into the transmission facilities. The Company would work with affected landowners to replace removed trees with other, more suitable trees and shrubs, regardless of what route is selected.

7.5.4 FAUNA

Because the Project is located within a highly developed urban area, the fauna generally present within the Project Area are adapted to high levels of anthropogenic disturbance. Therefore, it is unlikely that the construction, operation and maintenance of the Project would have an effect on fauna present in the Project Area. Wildlife that inhabit trees that may be removed for the Project will likely be temporarily displaced. Comparable habitat is adjacent to the routes, and it is likely that these organisms would only be displaced a short distance.

Raptors, waterfowl and other bird species may be affected by the construction and placement of the transmission lines. Avian collisions are a possibility after the completion of the transmission line in areas where there are wetlands and open water. The nearest open water is Powderhorn Lake, approximately 0.2 miles south of the 31st Street portion of Route C.

Additionally, the electrocution of large birds, such as raptors, can be a concern with transmission lines. Electrocution occurs when birds with large wingspans come in contact with two conductors or a conductor and a grounding device. The Company transmission line design standards provide adequate spacing to eliminate the risk of raptor electrocution, so there are no concerns about avian electrocution as a result of the proposed Project.

Mitigative Measures

Displacement of fauna is anticipated to be minor and temporary in nature. No long-term population-level effects are anticipated; therefore, no mitigation is proposed.

The Company has been working with various state and federal agencies over the past 20 years to address avian issues as quickly and efficiently as possible. In 2002, the Company entered into a voluntary memorandum of understanding ("MOU") with the USFWS to work together to address avian issues throughout its service territories. This includes the development of Avian Protection Plans ("APP") for each state the Company serves: Minnesota, South Dakota and North Dakota. Work is currently underway on the Xcel Energy APP.

The primary methods the Company uses to address avian issues for transmission projects include:

- Working with the resource agencies to identify any areas that may require marking transmission line shield wires and/or using alternate structures to reduce collisions. This may include the MnDNR, USFWS and/or the U.S. Army Corps of Engineers.
- Attempting to avoid areas known as major flyways or migratory resting spots.

This Project has been assessed for these types of areas and none have been found. As such, it is unlikely that any avian impacts will result from the construction of these facilities.

7.6 RARE AND UNIQUE NATURAL RESOURCES

The MnDNR Natural Heritage Database in the Project Area was consulted to identify any rare or unique resources identified within the Project Area (See Rare Features Map, Appendix B.14). Nine known occurrences of rare species or special communities have been identified within one mile of Route alternatives (MnDNR Natural Heritage Database, 2009b). The resources in Table 18 were compiled using the MnDNR Natural Heritage Database (per Houston Engineering, Inc. License Agreement No. LA-423).

TABLE 18
RARE AND UNIQUE RESOURCES

Common Name	Number of Occurrences	Scientific Name	Federal Status	MN Status	State Rank [2]	Habitat
Blanding's Turtle	1	*Emydoidea blandingii*	None	Threatened	S2	Wetland complexes and adjacent sandy uplands (MnDNR, 2009c)
Handsome Sedge	1	*Carex formosa*	None	Endangered	S1	Moist deciduous woodlands (MnDNR, 2009d)
Eastern Pipistrelle	1	*Pipistrellus subflavus*	None	Special Concern	S3	Caves, mines and tunnels (MnDNR, 2009d)
Bat Colony	1	*Bat Colony*	None	None	Rank not assessed	N/A. Species assemblage was found within a cave near the Mississippi River.
Wartyback	1	*Quadrula nodulata*	None	Endangered	S1	Fine or coarse substrates of large rivers (MnDNR, 2009f)
Fungus	1	*Psathyrella rhodospora*	None	Endangered	S1	Large, undecayed stumps of trees. Species occurrence was found near the Mississippi River (MnDNR, 2009g).
Peregrine Falcon	1	*Falco peregrinus*	None	Threatened	S2B	Historic habitat was cliff ledges along rivers or lakes. Current nesting habitat can be buildings and bridges in urban settings (MnDNR, 2009h).
Black Sandshell	1	*Ligumia recta*	None	Special Concern	S3	Typical riffle and run areas of medium to large rivers in areas dominated by sand or gravel (MnDNR, 2009i).
Spike	1	*Elliptio dilatata*	None	Special Concern	S3	Small to large rivers in areas with sand and gravel substrates, or reservoirs and lakes with outlets dominated by swift currents (MnDNR, 2009j).

Source: MnDNR Natural Heritage Database, 2009b

[2] In Minnesota, a rank is assigned to the natural community type, which reflects the known extent and condition of that community. Ranks range from S1 (in greatest need of conservation action in the state) to S5 (secure under present conditions) to SU (undetermined, more information is needed).

No known occurrences of rare or unique resources were identified within the Project Area. With the exception of the Blanding's Turtle, all rare or unique resources shown in Table 19 are located along the Mississippi River located approximately one mile to the north and east of the Project Area. Due to the distance of these resources from the Project Area, the construction of the proposed Project would not have an impact on these resources.

The Blanding's Turtle was last observed on May 14, 1986 approximately one-half block south of the Project Area in a city park. No subsequent sitings of this species have been recorded. Blanding's Turtles need both wetland and upland habitats to complete their life cycle (MnDNR, 2009k).

The 31st Street portion of Route C Route would travel closest to the recorded occurrence of the Blanding's Turtle. However, because the transmission line would be located on the north side of 31st Street, the construction activities would not occur within areas of potential Blanding's Turtle habitat. As such the construction activities are unlikely to have an impact on the Blanding's Turtle.

Mitigative Measures

No impacts are anticipated. Therefore, no mitigative measures are proposed.

7.7 COMPARISON OF ENVIRONMENTAL CONSIDERATIONS FOR ALTERNATIVES

Table 19 summarizes Xcel Energy's analysis of environmental routing rule factors Xcel Energy with respect to the four proposed routes and the five design options.

TABLE 19
COMPARISON OF ROUTE ALTERNATIVES

Factor	Route A Overhead	Route A Underground	Route B	Route C	Route D	Summary/Mitigation
Affects on Human Settlement						
Displacement	No displacement is anticipated for construction of the transmission lines. If the Hiawatha West site is chosen for the Hiawatha Substation, no displacement is anticipated. If the Hiawatha East site is chosen for the Hiawatha Substation, it would displace the existing Crew warehouse. If the Midtown North site is chosen for the Midtown Substation, a residential triplex currently registered as vacant and listed as condemned would need to be removed. If the Midtown South site is chosen for the Midtown Substation, the Brown Campbell warehouse facilities would be displaced.					
Noise	Transmission line and substations will be designed to be within MPCA and City of Minneapolis noise limits.					
Aesthetics	Will affect area aesthetics within close proximity of the transmission lines and substations. The lines would parallel the HCRRA Corridor and cross by the Midtown Exchange. There are approximately 54 landowners located on or adjacent to the proposed right-of-way. [3]	Construction activities would cause aesthetic impacts. Post-construction, aesthetic impacts limited to substation areas and 30-foot right-of-way area for transmission lines where minimal vegetation would be compatible. There are approximately 52 landowners located on or adjacent to	Will affect area aesthetics within close proximity of the transmission lines and substations. Portions of the lines would cross or be located near the American Swedish Institute and Midtown Greenway. There are approximately 483 landowners located on or adjacent to the proposed right-of-way.	Will affect area aesthetics within close proximity of the transmission lines and substations. Portions of the lines would cross or be sited near the Midtown Greenway. There are approximately 312 landowners located on or adjacent to the proposed right-of-way.	Construction would cause aesthetic impacts. No post-construction aesthetic impacts are anticipated. There are approximately 180 landowners located on or adjacent to the proposed right-of-way.	Overhead lines have a greater aesthetic impact. If an overhead route is chosen, Routes B and C would impact a greater number of residences than Route A. Aesthetic impacts relating to substations will be minimized by using decorative walls between substation and neighboring properties.

[3] This table does not include residents who are not landowners.

Factor	Route A Overhead	Route A Underground	Route B	Route C	Route D	Summary/Mitigation
		the proposed right-of-way.				
Cultural Values	No impacts to cultural values are anticipated.					
Recreation	Construction of the Project along Route A could potentially affect use of the Midtown Greenway, depending on final alignment. All construction closures would be temporary in nature. The Company will work with stakeholders to minimize impacts when feasible. No permanent impacts are anticipated.	Construction of the Project along the Greenway could potentially affect use of the Midtown Greenway. All construction closures would be temporary in nature. The Company will work with stakeholders to minimize impacts when feasible. No permanent impacts are anticipated.	Construction of the short segment of the line near the HCRRA Corridor may temporarily impact the use of the Midtown Greenway. All construction closures would be temporary in nature. The Company will work with stakeholders to minimize impacts when feasible. No permanent impacts are anticipated. Portions of the transmission line facilities will likely be visible from Stewart Park and the Minneapolis Park Service's 2529 13th Avenue South Property.	Construction of the short segment of the line near the HCRRA Corridor may temporarily impact the use of the Midtown Greenway. All construction closures would be temporary in nature. The Company will work with stakeholders to minimize impacts when feasible. No permanent impacts are anticipated. Portions of the Project will likely be visible from Powderhorn Park.	Construction of a short segment of the line near the HCRRA Corridor may temporarily impact the use of the Midtown Greenway. All construction closures would be temporary in nature. The Company will work with stakeholders to minimize impacts when feasible. No permanent impacts are anticipated.	The Project could potentially affect use of the Midtown Greenway during construction. None of the route alternatives will permanently impact use of recreational resources in the Project Area. All construction closures would be temporary in nature. The Company will work with stakeholders to minimize impacts when feasible.
Public Services	Minor temporary road closings are anticipated for overhead transmission routes. The duration and details of the road closing will be based upon the alternative selected and conditions encountered in the field. See Route D for underground transmission line impacts.				Longer term temporary road closings are anticipated for underground transmission routes. The duration and details of	Impacts to public services as a result of the proposed Project would be limited to temporary road closings. Underground transmission line route alternatives would

Factor	Route A Overhead	Route A Underground	Route B	Route C	Route D	Summary/Mitigation
					the road closing will be based upon the alternative selected, conditions encountered in the field and final line placement.	likely cause road closings of longer duration than overhead transmission line route alternatives.
Effects on Public Health and Safety						
Public Health and Safety	The Company will ensure that all safety requirements are met during the construction and operation of the proposed transmission lines and associated facilities.					
Effects on Land-based Economics						
Agriculture, Forestry and Mining	The transmission lines and substations would not be located in agricultural areas or areas utilized for forestry or mining activities. Therefore, no impacts to agriculture, forestry or mining are anticipated.					
Tourism	Will be located adjacent to the Midtown Global Market and Sheraton Minneapolis Midtown Hotel. The transmission lines will likely be visible from these resources but will not directly affect their use.	No impacts to tourism are anticipated as a result of the underground route alternatives. Temporary impacts to business may occur during construction due to temporary road closures.	One line will be located adjacent to the American Swedish Institute. The transmission line will likely be visible from this resource but will not directly affect its use.	One line will cross Lake Street near the intersection of East Lake Street and Portland Avenue South. The transmission lines will likely be visible from Lake Street shops in the vicinity of the lines but their use will not directly affect their use.	No impacts to tourism are anticipated as a result of the underground route alternatives. Temporary impacts to business may occur during construction due to temporary road closures.	The overhead transmission routes are located adjacent to several features that draw visitors to the Project Area. The lines will likely be visible from these features but will not directly affect their use. No impacts to tourism are anticipated as a result of the underground route alternatives.
Effects on Archaeological and Historic Resources						
Archaeological Resources	There are no known archaeological resources in the Project Area. Based on proposed route alignments, past disturbance and Project setting, the likelihood of encountering previously unidentified archaeological resources is very low.					

Factor	Route A Overhead	Route A Underground	Route B	Route C	Route D	Summary/Mitigation
Historic/ Architectural Resources	There are 14 sites of historic or architectural significance located within 0.1 miles of Route A, which includes 8 properties on the NRHP and 4 properties eligible for listing on the NRHP. Majority of route is adjacent to or near Chicago, Milwaukee, and St. Paul Grade Separation Historic District, portions of which are currently used as the Midtown Greenway. This property is listed on the NRHP.	The majority of route would be located on or adjacent to the Chicago, Milwaukee, and St. Paul Grade Separation Historic District. This property is listed on the NRHP.	There are 24 sites of historic or architectural significance located within 0.1 miles of Route A, which includes 9 properties on the NRHP and 5 properties eligible for listing on the NRHP.	There are 22 sites of historic or architectural significance located within 0.1 miles of Route A, which includes 7 properties on the NRHP and 5 properties eligible for listing on the NRHP.	Route D would not affect any known historic or architectural resources.	The majority of Route A would be located on or adjacent to the Chicago, Milwaukee, and St. Paul Grade Separation Historic District, which is a historic property listed on the NRHP. Both Midtown North and Midtown South sites would be located adjacent to or partially within the Chicago, Milwaukee, and St. Paul Grade Separation Historic District.
Effects on the Natural Environment						
Air Quality	Temporary localized air quality impacts caused by construction vehicle emissions and fugitive dust from ground disturbance are expected to occur. Because underground transmission line construction would require more construction equipment and greater ground disturbance, construction emissions are anticipated to be greater for the underground route alternatives.					
Water Quality	No waterbodies are located within or adjacent to the right-of-way proposed for any of the transmission route alternatives. Standard erosion control measures as identified in the MPCA Stormwater Best Management Practices Manual will be used to minimize indirect impacts to water resources.					
Flora	Impacts to existing vegetation would be minor. Will require removal of or significantly impact 5 trees.	Impacts to existing vegetation would be minor. Will require removal of or significantly impact	Impacts to existing vegetation would be minor. Will require removal of or significantly	Impacts to existing vegetation would be minor. Will require removal of or significantly impact 19 trees,	Impacts to existing vegetation would be minor. Will require removal of or significantly impact 43 trees if placed in	The underground route alternatives would impact a greater number of trees as compared to aboveground alternatives. The Hiawatha West site

Factor	Route A Overhead	Route A Underground	Route B	Route C	Route D	Summary/Mitigation
		2 trees if placed in sidewalk area.	impact 8 trees.	including 3 mature American elm trees.	sidewalk area.	would require removal of 5 trees. No trees would be impacted by development of the Hiawatha East site. Midtown North and Midtown South substation sites would require removal of 1 tree.
Fauna	Impacts to fauna are anticipated to be minor and temporary in nature. Because the Project is located within a highly developed urban area, the fauna generally present are adapted to high levels of anthropogenic disturbance.					
Effects on Rare and Unique Natural Resources						
Rare and Unique Natural Resources	Nine known occurrences of rare species or special communities were identified within one mile of the Project Area. No impacts are anticipated.					
Application of Design Options that maximize energy efficiencies, mitigate adverse environmental effects, and could accommodate expansion of transmission or generating capacity						
General	Both the Hiawatha and Midtown substations will have capacity to accommodate additional transmission line tie-ins, as well as additional feeder lines to meet future demand for power. Decorative walls are proposed for both the Hiawatha and Midtown substations to mitigate aesthetic and noise impacts of the substations to the surrounding area. Both substations will be equipped with smart grid substation technologies.					
Use of Existing Transportation, Pipeline and Electrical Transmission Systems or Rights-of-Way						
Existing transportation, pipeline and electrical transmission systems right-of-ways	All transmission routes have been proposed within existing rights-of-way. A small amount (possibly 10-20 feet) of additional aerial right-of-way will be required to allow for line maintenance and tree trimming within private property adjacent to the proposed routes.					

Factor	Route A Overhead	Route A Underground	Route B	Route C	Route D	Summary/Mitigation
Electrical System Reliability						
Electrical System Reliability	The transmission lines and associated facilities are being proposed to improve the reliability and meet the increasing demand for electricity of the Project Area.					
Cost of Constructing, Operating and Maintaining the Facility which are Dependent on Design and Route						
Costs	Route A consists of two 1.4-mile single circuit transmission lines located within a single corridor. The cost of Route A, including associated facilities is estimated at $28.4 million for the overhead option.	Route A consists of two 1.4-mile single circuit transmission lines located within a single corridor. The cost of Route A, including associated facilities is estimated at $40.1 million for the underground option.	Route B consists of one 1.8-mile single circuit transmission line and one 1.4-mile single circuit transmission line located in two separate corridors. The cost of Route B, including associated facilities is estimated at $30.4 million.	Route C consists of one 1.5-mile single circuit transmission line and one 2.2-mile single circuit transmission line located in two separate corridors. The cost of Route C, including associated facilities is estimated at $31.1 million.	Route D consists of two 1.5-mile single circuit transmission lines located within a single corridor. The cost of Route D, including associated facilities is estimated at $41.8 million.	Route A is the least cost overhead alternative due to its shorter length. The costs of the two underground designs alternatives (Routes A and D) are significantly higher due to the higher cost for underground transmission line construction.
Adverse Human and Natural Environmental Effects Which Cannot Be Avoided						
Unavoidable Impacts	Unavoidable adverse impacts include the physical impacts to the land due to construction of the Project. The impacts for underground alternatives will be greater than for overhead alternatives due to greater ground disturbance required to install underground facilities. Xcel Energy will implement measures as described in the environmental analysis and as identified by regulatory agencies to minimize these unavoidable adverse environmental effects.					
Irreversible and Irretrievable Commitments of Resources						
General	There are few commitments of resources associated with this Project that are irreversible and irretrievable, but those few are resources primarily related to construction. Construction resources that will be used to construct the Project include aggregate resources, concrete, steel, and hydrocarbon fuel. During construction, vehicles will be traveling to and from the site, using hydrocarbon fuels.					Route A would require significantly fewer poles than Routes B and C, resulting in fewer commitments of

Factor	Route A Overhead	Route A Underground	Route B	Route C	Route D	Summary/Mitigation
Route Specific	The overall length of Route A is 1.4 miles. Approximately 19 double circuit poles would be needed for construction.	The overall length of Route A is 1.4 miles. The lines would be located in a concrete encased duct, with approximately 9 manholes.	Route B includes two single circuit lines (one 1.8 miles long and one 1.4 miles long). Approximately 39 poles would be needed for construction.	Route C includes two single circuit lines (one 1.5 miles long and one 2.2 miles long). Approximately 49 poles would be needed for construction.	The overall length of Route D is 1.5 miles. The lines would be located in a concrete encased duct, with approximately 8 manholes.	resources. Routes A and D are underground options and would not require transmission poles. However, they would be located within a concrete encasement duct, requiring significantly more concrete than the overhead route alternatives. Route A is shorter in length than Route D and would therefore require fewer commitments of resources.

8.0 AGENCY INVOLVEMENT, PUBLIC PARTICIPATION AND REQUIRED PERMITS AND APPROVALS

8.1 AGENCY CONTACTS

Xcel Energy has made significant efforts at reaching out to interested public agencies, nongovernmental organizations and the general public. Company staff proactively raised awareness among local elected officials about a potential project in their area long before plans were finalized by distribution and transmission planning.

8.1.1 HENNEPIN COUNTY

Throughout the route development process, the Company met on three separate occasions with county staff, including the environmental coordinator, the HCRRA director, the Hiawatha Corridor coordinator and offered to meet with other staff members. In addition, multiple meetings were held with Hennepin County commissioners interested in the Project or whose districts may have been affected by the Project. The Company provided several letters to Hennepin County commissioners and Hennepin County staff leadership as the Project Area was further defined. The letters provided the county information regarding the proposed Project and an invitation to attend the open house meetings. Immediately after Company staff identified the routing alternatives identified in this Application, the Company notified all County Commissioners and staff leadership.

On February 10, 2009, Company staff provided a briefing to the full Hennepin County Board of Commissioners. Staff stayed after the meeting to take additional questions from Board and County staff members.

Additional follow up meetings were offered to all commissioners following the February 10, 2009 board meeting. Individual project briefing meetings were held with three commissioners the week of March 2, 2009. These meetings covered general project information and provided the commissioners with the background information on the Project that had been given to other elected officials as part of the public outreach that began in September 2009. Project information packets were delivered to the offices of the remaining commissioners.

8.1.2 HENNEPIN COUNTY REGIONAL RAIL AUTHORITY

In the fall of 2008, the Company notified the HCRRA and the Hiawatha Coordinator about the Project and sent an invitation to the Company's open house meetings. An initial meeting between the Company and HCRRA staff was held on October 28, 2008, to discuss the Project. At that time HCRRA staff expressed few concerns about the Project. Previous meetings had been conducted with Commissioner Peter McLaughlin, the HCRRA board chair.

Xcel Energy staff received further input from a HCRRA commissioner at a meeting on January 30, 2009. At that meeting, the commissioner expressed satisfaction with Xcel Energy's willingness to

continue meeting with community groups as well as the Company's desire to find a solution workable for all stakeholders.

Company staff attended a full HCRRA commission meeting on February 24, 2009. Commissioner McLaughlin introduced a resolution in opposition to overhead lines along the Midtown Greenway. The resolution recognizes the need for more reliable power in the area, but states the HCRRA's objection to any overhead facilities on HCRRA Property (See Appendix J). The resolution contains a list of concerns about Route A, overhead design, including alleged interference with the planned rail facilities in the below grade trench adjacent to the bike path and related infrastructure, incompatibility with the NRHP historic district designation, conflicts with planned development of the corridor, negative aesthetic impacts, as well as difficulties in bridge repair or replacement. The resolution states an overhead line would be irreconcilably incompatible with the public uses for the Greenway corridor. As of March 31, 2009 no final action has been taken on this resolution.

8.1.3 CITY OF MINNEAPOLIS

The Company has engaged in an ongoing dialogue with Minneapolis city staff and elected officials going back several years regarding the general need to improve the electric infrastructure in South Minneapolis. The Company did briefings in 2007 and 2008 on the more specific need for improvements in the Lake Street and Hiawatha Avenue corridors. The Company leadership met with Mayor R. T. Rybak on September 16, 2008, to discuss the Project and routes. Company staff met with City Council members several times before and after the final route alternatives were chosen. Xcel Energy sent letters to the mayor, city council members, public works director, emergency operations director, city coordinator and planning director regarding the Project along with an invitation to the Company's open house meetings. In addition, immediately after the viable route alternatives were identified, the Company emailed the City Council, the mayor and City staff leaders. Multiple meetings were held with City staff, including a December 9, 2008 meeting during which the Company presented route alternatives for the Project.

The Company has also met with the City Council and subcommittees on January 26, 2009, and February 6, 2009 regarding the City's resolution to request that the Company place the lines underground, and recover the cost from the largest amount of customers possible. The resolution, which was passed unanimously, recognizes that problems have been experienced to date by residents and businesses in the Project Area, but asks the Company to delay filing the application until further study has been done on alternative power sources, need and route alternatives.

The Company recognizes the concern of the public and elected officials. Therefore, as a direct result of feedback received from stakeholders, the Company has delayed filing from the original schedule of January 2009 to April 2009 to summarize and compile the study analyses that support the need for the Project, and to further evaluate alternative power sources, analyze the effects of a combination of conservation and alternative power sources and to reassess the proposed routes.

The Company understands the community has concerns about an overhead line along the HCRRA Corridor and recognizes the substantial interest in placing the facilities underground. Xcel Energy representatives are continuing to meet with elected officials at the city and county level to discuss potential funding opportunities for the cost differential between the overhead and the underground transmission line alternatives. An option of using the City Requested Facilities Surcharge ("CRFS") separately or in conjunction with local government tax abatement is being discussed as a potential option for funding the cost of undergrounding. Typically, the CRFS applies only to the undergrounding of electric distribution infrastructure, but contemplates individual Commission review and approval for transmission facilities. Xcel Energy's tariff contemplates that Xcel Energy will seek approval of the Commission for the allocation of excess expenditures to the customers in the municipality that benefits from the special facilities (See Tariff Ch. 6, § 5.3(E)(2)). Xcel Energy has offered to ask regulators to adapt the CRFS process to apply to transmission lines for the Hiawatha Project.

8.1.4 COMMUNITY ORGANIZATIONS

The Company has met with area neighborhood organizations potentially affected by the proposed and alternative routes. In addition, the Company also contacted neighborhood organizations not immediately adjacent to the project infrastructure impact area. Company staff offered to meet with all the potentially affected community and neighborhood organizations in the Project Area. As a result of this outreach effort, Company staff met with nearly all of the potentially affected community and neighborhood organizations in the Project Area. Company representatives were available at over a dozen evening and late afternoon meetings for presentations and question and answer sessions. Take home information and personal contact information were given out to interested individuals and are available on the Company website (http://www.xcelenergy.com/Company/Transmission/Transmission%20Projects/Pages/Hiawatha Project.aspx). The information can be accessed by going to www.xcelenergy.com, clicking on "Company" on the black navigation bar, then Transmission in the drop down menu, then click Transmission projects in the left navigation bar, then MN: Hiawatha Project.

In addition to meeting with most of the neighborhood associations, Company staff met with the Minneapolis Regional Chamber of Commerce, the City of Lakes Chamber of Commerce and the Lake Street Council. Company staff personally called all potentially affected organizations, and provided brief project information and answered questions over the phone.

Company staff met with the board and other members from the Midtown Greenway Coalition on October 16 and November 26, 2008. The first meeting provided general project information. The second meeting included a more extensive presentation. The Coalition later passed a resolution asking for a delay in the route application filing, requesting further evaluation of renewable energy application alternatives, conservation and the need for the project (See Appendix J). The Midtown Community Works Partnership requested Company attendance at its November 3, 2008 and

February 12, 2009 meetings. Company staff members were available for questions at both meetings. The Partnership introduced and passed a resolution very similar to the City of Minneapolis, but the concerns raised in the resolution were focused heavily on the public use of the 29th Street/HCRRA Corridor and compatibility with the historic designation. The resolution requests if no other viable alternative can be found that the Company bury the transmission lines along 28th Street and recover the cost from as many customers as possible.

On March 17, 2009, Company staff met with representatives from the Greenway Coalition and others to discuss additional conservation efforts the Company could assist with in the Project Area. The Company is willing to continue these conversations with interested parties, but notes as described in Appendix D, conservation efforts alone will not solve the capacity and reliability issues facing the Project Area.

8.1.5 MINNESOTA SHPO

On December 30, 2008, the Company accessed the Minnesota SHPO Archaeological and Architectural database records as part of a preliminary cultural resource assessment of the Project Area to determine if the existence of any known or suspected archaeological sites or historic standing structures in the Project Area. The results of the database review are contained in Appendix E.

In addition to the database investigation as part of the Cultural Resources Assessment, Project staff contacted the SHPO compliance office regarding the Project and proposed use of the 29th Street/HCRRA Corridor for either the preferred overhead or underground route alternative. The Company is aware of the historic designation of the CM&StP Grade Separation and understands the potential aesthetic impacts of the transmission line. The Company is continuing to work with all affected parties towards a agreeable solution.

8.1.6 MINNESOTA DEPARTMENT OF TRANSPORTATION

The Company provided a letter to the Mn/DOT to provide the agency information regarding the proposed Project and an invitation to attend the open house meetings. Xcel Energy and Mn/DOT staff have been in contact regarding the availability of Mn/DOT land at the proposed Hiawatha West site. Xcel Energy is continuing to work with Mn/DOT to find a workable solution for both parties.

8.1.7 MINNESOTA DEPARTMENT OF NATURAL RESOURCES

The MnDNR Natural Heritage and Non-game Research Program database was accessed through the Company's existing licensing agreement on February 5, 2009, to review the Project Area for State threatened and endangered species and rare natural features. The rare features that were reported to be present within the Project Area are provided in Table 18. Because there are no water

bodies within or adjacent to the Project Area, the MnDNR Waters Division was not contacted regarding the Company's proposed Project.

8.1.8 METROPOLITAN COUNCIL

The Company provided letters to select Metropolitan Council members and staff to provide the agency information regarding the proposed Project and an invitation to attend the open house meetings. The Company also discussed the proposed Project with the Metropolitan Council Deputy Administrator.

8.2 MINNESOTA STATE LEGISLATORS

The Company has provided information and has met with interested local State legislators. They were invited to all open houses and received the same notification as the City of Minneapolis and Hennepin County officials about proposed and alternatives routes and substations.

8.3 IDENTIFICATION OF LAND OWNERS

A list of landowners along Route A and alternative routes is included as Appendix H. There are 729 landowners along the proposed routes included in this Application. This list does not include landowners along the rejected substation alternatives discussed in Appendix C.

8.4 PUBLIC PARTICIPATION

The Company has sought extensive public input throughout the pre-application route development process. The Company held six public open houses prior to developing this Application. Mailings were sent to more than 4,500 homeowners and customers in the Project Area to notify them about the public meetings. Advertisements were also placed in several local newspapers. These meetings were held to inform landowners and public officials of the proposed project and solicit input to be used in route selection. The Company held open houses at two central locations to the Project that were accessible by bus, light rail, bike and automobile. Open houses in Fall 2008 were held at the Midtown Exchange, one of the key revitalization projects in the neighborhood in recent years. The two open houses in January 2009 were held at Plaza Verde, another central location to the potentially affected neighborhoods, and another revitalized building in the Project Area. Spanish interpreters were available at all meetings. Key handouts about the Project were translated into Spanish and Xcel Energy outage information cards were available for Spanish speakers.

Comments received during the first round of four open houses held on October 29, 2008 and November 6, 2008, focused primarily on the following areas:

- Concerns related to Project need,
- Transmission line and substation siting alternatives; and

- General questions about electrical transmission, including human health/EMF concerns.

Comments received during the second round of two open houses held on January 15, 2009, focused primarily on the following areas:

- Concerns related to Project need and the feasibility of using conservation and or renewable energy sources to off-set future demand in the area,
- Aesthetic impacts and property values for stakeholders located near Route alternatives , primarily those residents living near the Midtown Greenway,
- Human health/EMF concerns; and
- Community desire to see the Project placed underground.

A copy of all comments received at the open house meetings and follow-up comments received as a result of the open house meetings are contained in Appendix G.

Company staff followed-up with all open house participants who indicated they would like additional information. The Project Team ensured knowledgeable staff from all areas of the Project from initial planning to construction implementation were available for open houses as well continual information inquiries.

Community organizations opposed to the Project advised their supporters to attend all Company open house meetings. The Company provided space at the January open house meeting for an opposition group to set up a display board. This information was also translated for interested Spanish speakers. While the Company received comments in opposition to the Project, many supporters of the Project also attended and expressed relief that power issues they have been experiencing will be significantly reduced by this Project. Similar comments were made during the follow up phone calls; some were in opposition of the Project and some were in support of the Project.

8.5 REQUIRED PERMITS AND APPROVALS

No person may construct a HVTL without a route permit from the Commission (*see* Minn. Stat. § 216E.03, subd. 2). The Project will also potentially require additional permits identified below in Table 20. All required permits will be obtained prior to construction.

Where a permit would be applicable only to a specific route alternative, the alternative to which the permit would apply is also identified in Table 20.

TABLE 20
POTENTIALLY REQUIRED PERMITS

Permit	Jurisdiction	Route Alternative
Water Appropriation Permit	MnDNR	Routes A & D depending on construction type
NPDES/SDS Construction Stormwater Permit	MPCA	Routes A, B, C, and D
Road Crossing/Obstruction Permits	Mn/DOT, County, Township, City	Routes A, B, C, and D
Lands Permits	County, Township, City	Routes A, B, C, and D
Over-width Loads Permits	County, Township, City	Routes A, B, C, and D
Driveway/Access Permits	County, Township, City	Routes A, B, C, and D
Erosion Control Permit	City of Minneapolis	Routes A, B, C, and D
Permit to Discharge to Storm Drain	City of Minneapolis	Routes A, B, C, and D
After Hours Work Permit	City of Minneapolis	Routes A, B, C, and D
Erosion Control Permit	MCWD	Routes A, B, C, and D

8.5.1 STATE OF MINNESOTA PERMITS

Water Appropriation Permit

The MnDNR Division of Waters requires a Water Appropriation Permit for any groundwater withdrawal of greater than 10,000 gallons of water per day or one million gallons per year. If underground design is chosen, a Water Appropriation Permit may be needed for trench dewatering activities.

NPDES/SDS Construction Stormwater Permit

The MPCA requires an NPDES/SDS Construction Stormwater Permit for land disturbing activities of one acre or greater. Coverage under the Construction Stormwater Permit program is obtained by preparing a site-specific Stormwater Pollution Prevention Plan and submitting an Application for permit coverage.

8.5.2 LOCAL PERMITS

Road Crossing/Obstruction Permits

These permits may be required to cross or occupy county, township and city road right-of-way.

Lands Permits

These permits may be required to occupy county, township and city lands such as park lands, watershed districts, and other properties owned by these entities.

Over-width Load Permits

These permits may be required to move over-width loads on county, township, or city roads.

Driveway/Access Permits

These permits may be required to construct access roads or driveways from county, township, or city roadways.

Erosion Control Permits

Most land disturbing activities in the City of Minneapolis require an Erosion Control Permit. Because the Project will disturb greater than 5,000 square feet of soil, an Erosion Control Plan review by the City of Minneapolis will also be required.

Because the Project will be located within the MCWD and will disturb greater than 5,000 square feet an Erosion Control Permit from the MCWD will also be required.

Permit to Discharge to Storm Drain

The Hiawatha and Midtown substations will create new storm water run-off that will discharge to the City of Minneapolis' municipal storm sewer system. Therefore, a permit to discharge to the storm drain will be required.

After Hours Work Permit

The City of Minneapolis prohibits the operation of construction equipment within the city between the hours of 6:00 p.m. and 7:00 a.m. on weekdays or during any hours on Saturdays, Sundays and federal holidays, except as allowed by permit for a specific project. Depending upon the alternative chosen, the Company may request a permit for after-hours construction for specific activities, such as road crossings.

9.0 REFERENCES

Background Source for Maps: 2008 Aerial Photographs. Minnesota Land Management Information Center.

City of Minneapolis, Department of Community Planning and Economic Development. Maps, Statistics & Neighborhood Information. http://www.ci.minneapolis.mn.us/cped/statistics-census.asp. Accessed December 2008.

City of Minneapolis, Department of Public Works, Bicycle & Pedestrian Program. Report on Bicycle Counts for the Midtown Greenway. July 15, 2008, revised July 16, 2008.

City of Minneapolis. Minneapolis List of Vacant and Condemned Properties. List accessed January 2009.

City of Minneapolis, Zoning Administration. http://www.ci.minneapolis.mn.us/zoning/. Accessed January 2009.

Committee to Review the Research Activities Completed Under the Energy Policy Act of 1992. *Research on Power-Frequency Fields*. National Research Council.

Environmental Data Resources, Inc. Environmental Database Search. November 18, 2008.

Environmental Impact Analysis Handbook, with respect to "Common Noise Sources and Levels", edited by Rau and Wooten, 1980.

Federal Emergency Management Agency. Flood Map Viewer. www.fema.gov. Accessed January 2009.

Hennepin County, Survey Division. Land parcel data. Data received from Hennepin County February 2009.

Metropolitan Council. 2005 Minneapolis Land Use. June 2006.

Minneapolis Park and Recreation Board. http://www.minneapolisparks.org/home.asp. Accessed January 2009.

Minnesota Geological Survey. Geologic Atlas, Hennepin County, Minnesota, edited by N.H. Balaban. Atlas C-4. 1989.

Minnesota Department of Natural Resources, 2009a. Ecological Classification System. http://www.dnr.state.mn.us/ecs/index.html. Accessed January 2009.

Minnesota Department of Natural Resources, Natural Heritage Program, Rare Natural Features Database, 2009k. Houston Engineering, Inc. License Agreement No. LA-423. Accessed February 2009.

Minnesota Department of Natural Resources, 2009c. Rare Species Guide, Blanding's Turtle. http://www.dnr.state.mn.us/rsg/index.html. Accessed February 2009.

Minnesota Department of Natural Resources, 2009d. Rare Species Guide, Handsome Sedge. http://www.dnr.state.mn.us/rsg/index.html. Accessed February 2009.

Minnesota Department of Natural Resources, 2009e. Rare Species Guide, Eastern Pipistrelle. http://www.dnr.state.mn.us/rsg/index.html. Accessed February 2009.

Minnesota Department of Natural Resources, 2009f. Rare Species Guide, Wartyback. http://www.dnr.state.mn.us/rsg/index.html. Accessed February 2009.

Minnesota Department of Natural Resources, 2009g. Rare Species Guide, Fungus (*Psathyrella rhodospora*). http://www.dnr.state.mn.us/rsg/index.html. Accessed February 2009.

Minnesota Department of Natural Resources, 2009h. Rare Species Guide, Peregrine Falcon. http://www.dnr.state.mn.us/rsg/index.html. Accessed February 2009.

Minnesota Department of Natural Resources, 2009i. Rare Species Guide, Black Sandshell. http://www.dnr.state.mn.us/rsg/index.html. Accessed February 2009.

Minnesota Department of Natural Resources, 2009j. Rare Species Guide, Spike. http://www.dnr.state.mn.us/rsg/index.html. Accessed February 2009.

Minnesota Department of Natural Resources, Division of Ecological Resources, 2009k. Environmental Review Fact Sheet Series. Blanding's Turtle. Updated March 2008.

Minnesota Public Utilities Commission. July 1998. *Final Report of the Science Advisors to the Minnesota Public Commission: Research Findings and Recommendations Regarding Claims of Possible Effects of Currents in the Earth on Dairy Cow Health and Milk Production.* St. Paul, Minnesota.

Minnesota Public Utilities Commission. EMF with respect to new transmission facilities. http://www.energyfacilities.puc.state.mn.us , St. Paul, Minnesota.

Minnesota State Interagency Working Group on EMF Issues. September 2002. *A White Paper on Electric and Magnetic Field (EMF) Policy and Mitigation Options*. St. Paul, Minnesota

Olden, Kenneth. 1999. *1999 NIEHS Report on Health Effects from Exposure to Power-Line Frequency Electric and Magnetic Fields*. National Institute of Environmental Health Sciences, National Institutes of Health. Research Triangle Park, North Carolina.

Stark, William E., M.A.; and Vermeer, Andrea, Ph.D. *Cultural Resources Assessment for the Xcel Energy Hiawatha Project, Minneapolis, Hennepin County, Minnesota.* January 2009.

United States Census Bureau. 2000 Census Data. General Demographic Characteristics, Hennepin County, Minnesota. http://www.census.gov/main/www/cen2000.html. Accessed December 2008.

United States Department of Agriculture. SSURGO soil information from web soil survey. http://websoilsurvey.nrcs.usda.gov/app/WebSoilSurvey.aspx. Accessed January 2009.

United States Environmental Protection Agency, 2009a. National Ambient Air Quality Standards. http://www.epa.gov/air/criteria.html. Accessed January 2009.

United States Environmental Protection Agency, 2009b. South Minneapolis Residential Soil Contamination Site informational website. http://www.epa.gov/region5/sites/cmcheartland/. Accessed January 2009.

United States Fish and Wildlife Service. 1990. *National Wetlands Inventory (NWI) Hennepin County.* Washington, DC.

10.0 DEFINITIONS

A-weighted Scale	The sensitivity range for human hearing.
Commission	Minnesota Public Utilities Commission
Conductor	A material or object that permits an electric current to flow easily.
Corona	The breakdown or ionization of air in a few centimeters or less immediately surrounding conductors.
Distribution Planning	Xcel Energy Distribution Planning Department
Fauna	The collective animals of any place or time that live in mutual association.
Flora	The collective plants of any place or time that live in mutual association.
General Permit	Construction General Stormwater Permit
Hydrocarbons	Compounds that contain carbon and hydrogen, found in fossil fuels.
Ionization	Removal of an electron from an atom or molecule.
Oxide	A compound of oxygen with one other more positive element or radical.
Ozone	A form of oxygen in which the molecule is made of three atoms instead of the usual two.
Raptor	A member of the order Falconiformes, which contains the diurnal birds of prey, such as the hawks, harriers, eagles and falcons.
Stray Voltage	Stray voltage is a condition that can occur on the electric service entrances to structures from distribution lines, not transmission lines. More precisely, stray voltage is a voltage that exists between the neutral wire of the service entrance and grounded objects in buildings such as barns and milking parlors. Transmission lines do not, by themselves, create stray voltage because they do not connect to businesses or residences. Transmission lines, however, can induce stray voltage on a distribution circuit that is parallel to and immediately under the transmission line. Appropriate measures will be taken to prevent stray voltage problems when the transmission lines proposed in this Application are parallel to or cross distribution lines.
Transmission Planning	Xcel Energy Transmission Planning Department
Ultraviolet Radiation	A portion of the electromagnetic spectrum with wavelengths shorter than visible light.
Voltage	Electric potential or potential difference expressed in volts.
Wetland	Wetlands are areas that are periodically or permanently inundated by surface or ground water and support vegetation adapted for life in saturated soil. Wetlands include swamps, marshes, bogs and similar areas.
Working Group	Interagency Working Group

11.0 ACRONYMS

Following are a list of acronyms used in this Application:

AC	Alternating Current
ACSR	Aluminum Conductor Steel Reinforced
APP	Avian Protection Plans
CM&StP	Chicago, Milwaukee & Saint Paul Rail Line
CRFS	City Requested Facilities Surcharge
dBA	A-weighted sound level in decibels
EIS	Environmental Impact Statement
ELF	Extremely Low Frequency
EMF	Electric and Magnetic Fields
EPA	United States Environmental Protection Agency
EPRI	Electric Power Research Institute
FEMA	Federal Emergency Management Agency
HCRRA	Hennepin County Regional Rail Authority
HDD	Horizontal Directional Drilling
HPC	Minneapolis Heritage Preservation Commission
HVED	High Voltage Extruded Dielectric
HVTL	High Voltage Transmission Line
Kcmil	A thousand circular mils
kV	Kilovolt
kV/m	Kilovolts Per Meter
LTC	Load Tap Changer
MAAQS	Minnesota Ambient Air Quality Standards
MCWD	Minnehaha Creek Watershed District
MDA	Minnesota Department of Agriculture
mG	milliGauss
MnDNR	Minnesota Department of Natural Resources
Mn/DOT	Minnesota Department of Transportation
MOU	Memorandum Of Understanding
MPCA	Minnesota Pollution Control Agency
MVA	Mega Voltampere
MW	Megawatts
NAAQS	National Ambient Air Quality Standards
NAC	Noise Area Classification
NERC	North American Electric Reliability Corporation
NESC	National Electric Safety Code
NIEHS	National Institute of Environmental Health Sciences
NO_2	Nitrogen Dioxide
NPDES	National Pollutant Discharge Elimination System
NRHP	National Register of Historic Places
NWI	National Wetlands Inventory
OES	Department of Commerce, Office of Energy Security
PEER	People for Environmental Enlightenment and Responsibility, Inc.
PPSA	Power Plant Siting Act
PSCW	Public Service Commission of Wisconsin

PVC	Polyvinyl Chloride
ROW	Right-of-way
SDS	State Disposal System
SHPO	Minnesota State Historic Preservation Office
USDA	United States Department of Agriculture
USFWS	United States Fish and Wildlife Service
WHO	World Health Organization