1 Summary

1.1 Introduction

Northern States Power Company, a Minnesota corporation ("Xcel Energy" or the "Company"), submits this Application for two Certificates of Need to the Minnesota Public Utilities Commission ("Commission"). First, we request the Commission issue a Certificate Of Need ("CON") to allow for sufficient dry cask storage at the existing Independent Spent Fuel Storage Installation ("ISFSI") at Prairie Island in order to accommodate plant operations through 2034. The procedures and criteria for this CON are contained in Minn. Stat. § 216B.243, and Minn. R. Parts 7855 and 7829. Second, we request the Commission issue a CON to increase the combined electrical generating capacity of the two reactors at Prairie Island by 164 MW to meet the growing needs of our customers. The procedures and criteria for this CON are contained in Minn. Stat. § 216B.243, and Minn. R. Parts 7849 and 7829.

The 35 additional storage casks necessary to continue operating Prairie Island an additional 20 years and the additional 164 MW of capacity and energy from the power uprate provide our customers and the region significant economic and environmental benefits.

- *Economic Benefits.* Extending Prairie Island's operating life for an additional twenty-years and implementation of the power uprate helps the Company meet our customers' growing energy needs in the most cost-effective manner. Continuing to operate Prairie Island for an additional twenty-years is $1.1 billion less expensive on a present value revenue requirements ("PVRR") basis as the next best alternative, which was replacing the plant with two natural gas combined cycle units. Implementation of the power uprate results in over $519 million in savings on a PVRR basis over the alternative. Numerous sensitivity analyses confirm the projects are the least-cost options under a multitude of assumptions.

- *Environmental Benefits.* Prairie Island is an existing, non-carbon emitting generation source. Replacing Prairie Island with a fossil fueled generation resource would significantly increase carbon emissions. Continued use of the plant instead of replacing it with the next least cost option (natural gas combined cycle units) that prevents approximately 88 million tons of carbon from being released over the

next 20 years. Implementing the power uprate could result in between 16 million and 65 million less tons of carbon being emitted over the next 20 years. The reduction in carbon and other emissions is due to both new fossil fuel generation resourced not being built due to the power uprate and the reduction in the use of some existing fossil fuel plants due to the availability of the power uprate project.

Additionally, the projects will occur within the existing plant and ISFSI so no greenfields will be disturbed and the operation of the plant after power uprate will take place within all existing permit limits.

- *Risk Benefits*. The continued operation of Prairie Island will add to our diversity of fuels by acting as a price hedge against the volatility of natural gas prices and future carbon regulations. The project also provides a hedge against unanticipated delays in meeting the challenges in achieving the conservation goals and delivering the wind power contained in our 2007 Resource Plan.

The economic, environmental and risk benefits these two projects provide are consistent with the Company's and the State's goals of being an environmental leader, while minimizing the impact on electric rates. We are pleased to request approval of these projects as both the projects proved superior to the available alternatives.

1.2 Structure of Petition

We present our Applications in the Sections listed below, including sections specifically addressing each of the four principal criteria provided by the Commission's Certificate of Need rules (Minn. R. 7855.0120 and 7849.0120):

- *Summary*, providing an overview of the Applications, the projects and the need and benefit of the projects.
- *General Information and Regulatory Permits*, where we provide general information required by the applicant and the additional permits necessary to implement the projects.
- *Plant Information and Project Descriptions*, where we describe Prairie Island, its importance, and a description of the additional dry cask storage and power uprate projects.
- *Alternatives to Continued Operation,* which describes the alternatives to the continued operation of the plant including additional demand-side

management, renewables, fossil fuel generation and the "no action" alternative.

- *Dry Cask Storage Alternatives*, reviews the alternatives to on-site storage, the potential for increase pool storage capacity, dry cask technologies and discusses alternatives of different size and at different sites, as well as the "no action" alternative.
- *Alternatives to Power Uprate*, describes the evaluation methodology and criteria used to determine the most viable alternatives to the power uprate and the economic and environmental results of that evaluation.
- *Dry Cask Storage Environmental Information*, presents the environmental impact of the additional dry casks being proposed at the existing ISFSI.
- *Power Uprate Environmental Information*, discusses the environmental impact of the proposed power uprate project.
- *Denial Would Adversely Affect Adequacy, Reliability, and Efficiency of Energy Supply System*, provides verification of our system needs for the energy and capacity the two proposals provide.
- *Projects Benefit Society,* presents additional considerations such as risk mitigation and environmental impacts that will benefit society if our proposals are adopted.
- *Project Compliance,* demonstrates that our proposals comply with all applicable Statutes, Rules and other requirements.

1.3 Background

Xcel Energy's nuclear power plants -- Prairie Island and Monticello -- play important roles in our fleet of generating resources. Prairie Island is a 1,100-megawatt plant consisting of two pressurized water reactors, located in Red Wing, Minnesota and Monticello is a 600-megawatt boiling water reactor located in Monticello, Minnesota. The plants operate around the clock for extended periods of time, and provide valuable base load service. Together, they provide approximately 15 percent of the Company's production capacity and produce over 28 percent of our customers' electric energy requirements of our northern five-state service territory.

As discussed in our 2007 Resource Plan, the Next Generation Energy Act of 2007 Act is recasting what the Company must do to meet our future energy

needs. We remain committed to providing an energy supply that is adequate, reliable and efficient, while meeting the aggressive new energy conservation goal and the requirement of 30 percent renewable energy by 2020 for Xcel Energy, and the requirement to reduce greenhouse gas emissions by 15 percent by 2015. In this effort, we will be adding significant amounts of wind energy to our system. To ensure our system has adequate capacity, especially as we significantly increase our renewable generation resources, we affirmed in the 2007 Resource Plan our earlier decision to seek to continue the operation of Prairie Island beyond its current operating licenses. As we have discussed in previous applications, we have concluded that the nuclear plants can continue to be operated safely, reliably and economically.

In our 2007 Resource Plan, we also affirmed our plans to pursue power uprates at both Prairie Island and Monticello as the most cost-effective means to meet growing demand without increasing our carbon emissions. On February 14, 2008, we filed an application for an increase in generating capacity at Monticello. In this application, we request the Commission approve a similar project at Prairie Island.

To accommodate the extended operating lives of the Prairie Island reactors, it will be necessary to increase the number of dry casks temporarily stored at the existing ISFSI. While the federal government remains responsible for the ultimate disposal of the spent nuclear fuel, until a permanent federal repository is available, it is necessary for Xcel Energy to provide temporary on-site storage for the spent fuel.

This filing is our application for the two CONs required to accommodate the extended and enhanced operation of Prairie Island. As discussed in this application, the operation of Prairie Island cannot continue after 2014 unless authority is granted to increase the number of dry casks stored at the existing ISFSI. In addition, our evaluation has demonstrated that the proposed power uprate is the most cost-effective option to meet the growing energy needs of our customers. Both projects will significantly contribute towards reducing carbon and other emissions.

1.4 The Prairie Island Plant

Prairie Island has two, two-loop pressurized water reactors. These reactors produce on average a nominal value of 550 megawatts of electrical power in each unit. Unit 1 began commercial operation in December 1973, and Unit 2 began operations in December 1974. The initial Nuclear Regulatory

Commission ("NRC") license for each unit was for a period of 40 years. The initial licenses will expire in 2013 and 2014 for Unit 1 and Unit 2, respectively. The Company submitted an application to the NRC for an additional 20-year license extension for both units on April 15, 2008.

Each reactor at Prairie Island is shut down approximately every eighteen to twenty months for refueling. During each refueling outage, an average of 48 fuel assemblies are removed from each reactor and replaced with new assemblies. The spent fuel assemblies are placed in the spent fuel pool within the plant for temporary storage. The entire inventory of spent nuclear fuel produced during the plant's 35 years of operation is stored in the plant's spent fuel pool or in dry casks at the ISFSI. There are currently 24 dry casks at the ISFSI. The Commission has authorized the storage of the spent fuel generated during the period of the initial NRC operating licenses at the ISFSI until a permanent federal repository is available.

1.5 Additional Dry Cask Storage Project Description

Prairie Island currently has State authorization for enough dry casks (29) to store the spent fuel generated until the end of the current operating licenses in 2013 and 2014. The plant will require additional storage for the spent nuclear fuel generated after 2014. In order for the reactors to continue operation through a license renewal period to 2033 and 2034, up to an additional 35 dry casks will need to be added to the existing ISFSI. We propose to use enhanced version of the TN-40 cask currently at use at the plant. The enhanced version is called the TN-40HT and is also manufactured by Transuclear, Inc.

We propose to provide the additional spent fuel storage at Prairie Island by extending the concrete storage pads within the existing ISFSI located at the plant. The ISFSI is currently licensed by the NRC to store 48 TN-40 casks. The proposed extension of the storage pads will be sufficient to accommodate the 16 additional casks.

1.5.1 Alternatives to the Continued Operation of Prairie Island

If the Commission should deny our application for additional dry cask storage, Prairie Island will be required to shutdown in 2013 (Reactor Unit 1) and 2014 (Reactor Unit 2). Under this scenario, there will be a need to "replace" the 1,100 megawatts of electrical power currently provided by Prairie Island by new sources of generation. However, the need for additional dry cask storage is not eliminated if the plant does not operate beyond 2013-2014.

If our CON application for additional storage to continue operating the plant is not granted, Prairie Island would be required to shutdown by the end of 2014 and the decomissioning process would begin. In order to decommission the plant, spent fuel would have to be removed from the reactor and spent fuel pool. To support the decommissioning process, 39 additional dry cask storage containers would be necessary. Thus, if the Commission denies this CON application for an additional 35 storage casks to continue operating the plant, we will need to offer a new CON application to store an additional 39 dry casks at the ISFSI to decommission the plant.

The demand for electricity in our service territory in the Upper Midwest is growing at the rate of about 1.1 percent per year, or roughly 556 GWH and 133 MW each year. These estimates of demand and energy consumption already take into account the demand-side management goals set by the Minnesota Legislature in 2007. Without those efforts, growth would be even higher each year.

In our 2007 Resource Plan filing, we assumed we would achieve a saving of 1.1 percent of our retail sales through direct conservation programs. This will require a 30 percent savings increase from our 2004 energy savings goal and a 48 percent savings from our 2004 demand savings goals. These reductions are significant and it is not feasible to reduce demand by an additional 1,100 MW by 2013-2014 from conservation programs to replace the production of Prairie Island.

The potential replacement of all or substantially all of the power now produced by Prairie Island would result in both increased energy costs and significantly more carbon emissions. To replace the 1,100 MW of base load power generated by Prairie Island, new power plants fueled by coal or natural gas would need to be constructed. To evaluate these generation alternatives, as well as the continued operation of Prairie Island, we ran simulations with a planning model called "Strategist". Using a variety of assumptions, simulations were developed in which Prairie Island would continue to operate or, alternatively, was replaced with coal or natural gas fueled base load plants in 2013 and 2014. The simulations predict that our power supply will be at least $1.1 billion more expensive if Prairie Island must be replaced at the end of its current operating licenses. The simulations also estimate that carbon emissions will increase by approximately 17 percent if Prairie Island is shutdown at the end of its current operating licenses.

1.5.2 Alternatives to Additional Dry Cask Storage

We examined both off-site and on-site alternatives to the proposed additional dry cask storage at the existing ISFSI, but we did not find a more reasonable and prudent alternative. We examined four off-site alternatives: reprocessing spent nuclear fuel, the potential future federal storage facility at Yucca Mountain, Nevada, the potential future Private Fuel Storage facility in Utah, and the General Electric storage facility in Morris, Illinois.

There are no private companies currently operating reprocessing facilities in the United States, thus reprocessing is not a viable alternative. And while the federal government is statutorily and contractually responsible for developing a facility for the permanent disposal, the development of Yucca Mountain will not be available soon enough to prevent the need for additional dry cask storage at Prairie Island. Similarly, the development of the Private Fuel Storage ("PFS") facility is not without controversy and will not be available in the timeframe needed for Prairie Island. The last off-site alternative is the General Electric ("GE") storage facility in Morris, Illinois, which is no longer accepting spent fuel from commercial nuclear reactors.

We also examined four on-site alternatives: fuel rod consolidation, pool re-racking, alternative methods of dry spent fuel storage, and alternative on-site locations for storage of the additional dry casks.

Based on the results of a fuel rod consolidation demonstration project conducted at Prairie Island in the mid 1980's and the lack of any recent industry initiatives or design advances that would address the issues raised by the demonstration project, we conclude that fuel rod consolidation is not a viqable option. Re-racking is not a viable alternative as the number of storage cells gained by reracking would not be sufficient to support the additional storage cells needed for an additional 20 years of operation. The construction of a new spent fuel pool was evaluated in 1991 as part of the CON application for the existing ISFSI, where it was determined not to be cost-effective and that the increased handling of the fuel posed concerns. After reviewing multiple dry cask storage technologies, it was determined that the use of the non-canistered storage system we are currently using best fit our needs.

1.6 Environmental Information -- Additional Dry Cask Storage

The proposed addition of dry spent fuel casks to the existing ISFSI will have minimal environmental impacts. Since the additional casks will be placed in the existing ISFSI, there will be no disturbance at the plant site outside the ISFSI.

Within the ISFSI, the concrete pads on which the casks are placed will be extended. The two main environmental impacts due to the additional casks on the ISFSI and the continued operation of the plant are:

1) There will be a slight increase in the radiation due to the increased number of casks. The dose rate is also affected by the fuel to be stored and the use of the enhanced cask. Considering the fuel, new casks, the increased number of casks, and the estimated loading sequence, the off-site dose rate to the nearest Prairie Island resident was calculated to be approximately 0.36 mrem annually.[1] This is a small fraction of the 25 mrem annual allowable limit set by the NRC. Additionally, the 0.36 mrem would constantly decrease due to radioactive decay.

2) There will be a significant reduction in the amount of carbon and other emission released to the environment if Prairie Island continues to operate versus if it is replace with fossil fuel generation. Between 88 million and 107 million tons of carbon will not be released into the environment due to the continued operation of the plant as compared to the alternatives. Continued operation of Prairie Island will also result in significantly less SOx, NOx, CO, PM10 and VOC to be released compared to the alternatives.

1.7 Need for Power Uprate

The proposed power uprate at Prairie Island is necessary to meet the growing energy demands of our customers. For several years, we have recognized the need to increase energy and capacity to meet the rising levels of demand anticipated after 2010. In our 2004 Resource Plan, the Commission approved our request to pursue a package of uprates – including the Prairie Island project – as part of an effort to meet identified base load need (energy and capacity). Following the passage of major energy initiatives in the 2007 legislative session,

[1] This is a conservative calculation as explained further in Section 7.

the Commission granted the Company's request to defer implementation of the Prairie Island power uprate project pending a reevaluation of future needs.

In our Resource Plan filed December 14, 2007, even after planned compliance with the aggressive new Renewable Energy Standard and DSM initiatives, our system demand and energy requirements continue to grow at approximately one percent per year, or 133 MW and 556 GWH. By 2012, we estimate a 126 MW deficit; by 2022, the deficit will grow to over 2,800 MW. (Table 1-1)

Table 1-1 Projected Deficit Table

Year	MW
2010	(126)
2013	(395)
2014	(597)
2022	(2,886)

The power uprate project will supply 164 MW of electric power from Prairie Island to help reduce the growing deficit.

1.8 Power Uprate Project Description

The additional 164 MW due to the power uprate at the Prairie Island plant will be achieved by:

a) Increasing the amount of heat produced in the reactor, which will result in more steam being produced by the steam generators.

b) Improving the balance-of-plant equipment that converts the steam into electricity.

Higher steam flow from the reactors is obtained by operating the reactors at a higher thermal power level. Increasing the thermal output of the reactors will require more uranium in the reactor core to maintain the same fuel cycle length, e.g. eighteen to twenty months. This will be accomplished by using a fuel assembly that has slightly larger diameter fuel pellets. These larger fuel rods will also have more surface area for heat transfer offsetting some of the higher operating temperatures.

The project will result in very few modifications to the reactor and the reactor support systems that produce steam, but the balance–of-plant systems that convert the steam produced in the reactor to electricity will need modifications.

Some of the more significant balance-of-plant changes will be the replacement of the high-pressure turbines, rewinding or replacement of the main generators, replacement of the generator step-up transformers, replacement of the moisture separator reheaters and upgrading of the isophase bus duct cooling system.

The Prairie Island power uprate project will require license amendments from the NRC to operate the plant at a higher thermal temperature. The operating license amendments will be filed in 2010.

1.9 Alternatives to the Proposed Power Uprate Project

As part of our CON application, we evaluated several alternatives to the 164 MW power uprate project at Prairie Island, including both non-construction and construction alternatives.

1.9.1 Non-Construction Alternatives

1.9.1.1 Demand-Side Management

We are committed to achieving a 1.1 percent energy reduction as our CIP/DSM goal, consistent with the Next Generation Energy Act of 2007. We believe the target is aggressive, and will push the limits of achievable potential in our service territory and there is significant uncertainty regarding both the size and timing of actual savings.

Given these circumstances, a DSM based alternative to meet the projected future need in addition to the aggressive DSM goals already in place is risky, and is not a more reasonable or prudent alternative than the proposed power uprate.

1.9.1.2 Increased Efficiency of Existing Facilities

In addition to pursuing pending proposals for power uprate at Monticello and upgrades at Sherco, our next three largest plants – King, Riverside and High Bridge – are already undergoing major modifications to reduce their emissions and increase their electric output under our Metro Emission Reduction Program ("MERP"). Between the MERP plants and the Monticello Power Uprate and

the Sherco upgrades, we have recently increased, or are seeking to increase the electric output of our six largest plants.

Since there are fewer opportunities for additional efficiency projects at our existing plants, we determined an increased-efficiency alternative at our existing plants to meet the future need is not viable.

1.9.1.3 Long-Term Purchased Power Agreement ("PPA")

Although we are not aware of a specific long-term purchase opportunity, we modeled an estimate of a long-term PPA from a coal-based resource as a possible alternative to the power uprate. The hypothetical coal PPA was modeled to have the same cost, performance and emission characteristics of a new conventional coal plant. Our modeling showed that a 164 MW Coal PPA would be approximately $619 million more expensive over a 20-year period than the proposed power uprate.

In view of its significantly higher costs, we conclude a long-term purchased power alternative is not a more reasonable and prudent alternative.

1.9.1.4 Short-Term Purchased Power

We currently rely on short-term power purchases to cover about five to ten percent of our projected capacity and energy needs. In our 2007 Resource Plan, our analyses incorporated 750 MW of short-term purchases. Significant concerns exist about the reliability of short-term purchased power, including specific concerns about firm transmission service and continued recognition of MISO Network Transmission service being approved for accreditation of resources by MAPP. Additionally, there is significant risk involved with relying on short-term purchased power to fill base load needs – both from an availability and cost standpoint.

In view of the risks of increasing our reliance on short-term purchased power, we found that short-term purchased power alternative is not a more reasonable and prudent alternative than the proposed power uprate.

1.9.1.5 New Transmission Lines

Hypothetically, additional transmission infrastructure will provide access to additional capacity resources. However, since the capacity construction boom

of the late 1990's, there has been little capacity built in the region. Capacity markets are very tight, with little or no excess capacity available.

Since there are few opportunities for new transmission to bring in additional capacity, new transmission lines are not a viable or more prudent alternative than the proposed power uprate.

1.9.1.6 Distributed Generation

Pursuant to Minn. Stat. § 216B.2426, we are required to consider whether distributed generation can meet the need of this application. However, we are not aware of any distributed generation resources available that would be capable of meeting the current need. A significant percentage of the likely sources of distributed generation are wind and DSM. Our analysis already includes significant increases in both of these resources to meet the goals and requirements of the new RES and DSM legislation. As a result, the main sources of other distributed generation are likely to be biomass, biodiesel and hydro. Based on available cost estimates, these distributed resources are not likely to be cost-effective alternatives to the power uprate.

Although we did not identify individual "smaller-scale" distributed generation projects that would meet the 164 MW need, we did model a 164 MW base load biomass alternative. (Given its size, we did not categorize its as distributed generation.) Our analysis found the biomass plant would have roughly the same capacity and energy characteristics as the proposed power uprate, but lesser performance in terms of reliability and availability due to technology and fuel supply considerations. We also found the cost of the biomass alternative was approximately $1.179 billion more expensive than the power uprate.

Given its much higher cost and lesser reliability, we conclude the biomass alternative is not a more reasonable and feasible alternative.

1.9.1.7 Reduced Project Size

The proposed power uprate, with a net capacity increase of 164 MW, is the optimal, achievable MW increase at Prairie Island. If the size of the project were reduced, it would result in higher costs per MW and would require the implementation of additional projects to meet our customers' growing needs. In addition, even with the increased MW available in 2013 from the power uprate, our 2007 Resource Plan forecasts a 395 MW deficit in 2013 and a 1,195 MW deficit in 2015.

In view of the size of the need and the higher unit costs associated with a smaller power uprate project, a reduced project size alternative is not a more reasonable and prudent alternative to the power uprate project.

1.9.1.8 No Facility

If the power uprate is not undertaken, and no alternative source of the 164 MW is pursued, our system would begin showing a deficit in 2010 that would grow to over 2,800 MW by 2022. Thus, a "no facility" or "no action" alternative is not a more reasonable or prudent alternative to the power uprate.

1.9.2. Construction Alternatives

In addition to the hypothetical 164 MW Biomass plant and the hypothetical 164 MW Coal PPA discussed earlier, we evaluated an "unconstrained alternative". In this scenario, we allowed Strategist to select the most cost-effective combination of resources from the available generic resources including coal, natural gas combined cycle, and natural gas simple cycle resources. The model selected a natural gas combustion turbine ("CT") in place of the power uprate and indicated the natural gas CT alternative would be $519 million more expensive than the power uprate. The natural gas CT alternative also had more emissions associated with it than the power uprate.

Given its higher cost and emission levels, a natural gas CT alternative would not be a more reasonable and prudent alternative than the proposed power uprate project.

1.10 Environmental Information – Power Uprate

The proposed power uprate project at Prairie Island has minimal environmental impacts. The project will take place within the existing plant buildings. Since the plant's footprint isn't changing, no new land areas will be disturbed. In general, the effect of the power uprate on a given medium is bounded by the assumption that the increase is proportional to the increase in core thermal power. As a bounding limit, the increase in the use of a resource, such as surface or groundwater, or the increase of liquid or solid radioactive waste could increase in proportion to the proposed power increase of about 10 percent. As discussed in more detail in Section 8 for each medium, a bounding 10 percent increase is generally not significant and is well within the established parameters of acceptable operation. Thus, no changes to existing operating or

environmental permits are anticipated. There will also be a slight increase in circulating water outfall temperature, but the facility will continue to meet the discharge temperature limits set by the MPCA.

1.11 Certificate of Need Criteria

The procedures and criteria for Certificates of Need are contained in Minn. Stat. § 216B.243 and in Minn. R. Parts 7849, 7855 and 7829. Pursuant to the authority granted in Minn. Stat. § 216B.243, subd. 1, the Commission has established criteria to assess the need for additional dry cask storage (Minn. R 7855.0120) and the need for a large electric generating facility (Minn. R. 7849.0120). The four criteria are similar for both Certificates of Need.

Our Application for approval of the additional dry cask storage and the Prairie Island power uprate project meet all four principal criteria.

1.11.1 Minn. R. 7855.0120, subd. (A) & Minn. R. 7849.0120, subd. (A).

A. The probable result of denial would be an adverse effect upon the future adequacy, reliability, or efficiency of energy supply to the applicant, to the applicant's customers, or to the people of Minnesota and neighboring states…,

Our proposals for additional dry cask storage and power uprate at Prairie Island fully meet these criteria on all points:

- *Adequacy*: Our updated growth forecast[2] indicates that despite compliance with the new DSM and renewable legislation, our system continues to grow. Our system demand and energy requirements continue to grow at approximately 1 percent per year,[3] or by 133 MW per year and approximately 556 GWh per year. Our forecast indicates that starting in 2010 we have a 126 MW capacity deficit that increases to over 2,800 MW by 2022. This growth assumes that Prairie Island continues to operate until 2032-2034. If additional dry cask storage is not approved and the plant is required to shutdown starting in 2013, the 2013 deficit will increase from 395 MW to 980 MW; the 2015 deficit will increase from 1,195 MW to almost 3,000 MW; and the 2022 deficit will be almost 4,000 MW.

---

[2] Appendix B contains an explanation of a change that was made as to how we account for DSM in the forecast versus previous filings.

[3] 90th percentile peak forecast and 50th percentile energy forecast level

- *Reliability*: Prairie Island is essential to the reliability of the region's electric energy supply as it provides base load energy and capacity needs 24 hours per day, 7 days per week. Prairie Island has proven to be a highly reliable plant and the power uprate project will not affect the current reliability of the plant and the additional capacity and energy will be available at the current level of reliability.

- *Efficiency*: By comparing the forecast need to the available generation resources and planned additions, (including the addition of approximately 200 MW per year to meet the RES), we gain a better understanding of the importance or Prairie Island on our future resource needs. Figure 1-1 indicates that even with Prairie Island, we still have a significant capacity shortfall that grows over time. Absent the continued use of and expansion of Prairie Island, it is anticipated that the majority of the future capacity need will be filled by new natural gas generation.

Figure 1-1
Resource and Requirements

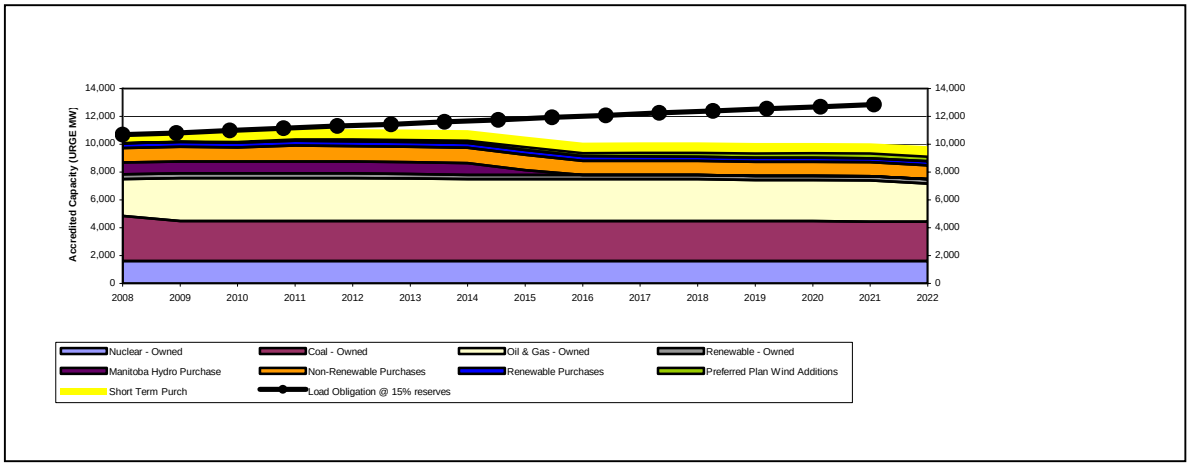

The continued use and expansion of such a reliable source of base load energy will help our future need for intermediate and peaking natural gas plants. By maintaining and expanding an existing base load generation facility, we can use some of the existing natural gas generation (which have more flexibility to be dispatched) to complement the intermittency of the new wind resource. The synergies gained are an extremely efficient use of energy supply resources.

Denial of our proposals will have an adverse effect on the adequacy, reliability, and efficiency of energy supply for our customers and the region. Our customers' growing needs, combined with new regulations, require us to maintain our existing non-carbon producing resources, while obtaining new

environmentally friendly resources to adequately meet future needs. The projects will not affect Prairie Island's high reliability and the power uprate projects will achieve 164 MW from one of our most reliable resources. Efficiencies will be gained by the use of an existing site versus the development of a new generation resource on a new green-field site and by changes to the dispatching of existing natural gas plants to complement energy from new wind resources.

> *B. A more reasonable and prudent alternative to the proposed facility has not been demonstrated by a preponderance of the evidence on the record…,*

The Prairie Island projects offer the best alternatives to meet the needs of our customers. The projects are the lowest-cost alternatives, provide significant environmental benefits through reduced carbon and other emissions and will assist us in meeting our legislated carbon and reduction goal.

We reach this conclusion after comparing the projects to various alternatives (including on-site and off-site storage, multiple dry cask storage containers, and a variety of generation and non-generation alternatives). We performed numerous sensitivities to determine the robustness of our analysis. In all cases, the Prairie Island projects proved to be the most cost-effective and contributed the most to our legislated carbon and fossil fuel reduction goals. As seen in Table 1-2 below, the generation replacement alternatives were between $1.1 billion and $2.2 billion more expensive than operating Prairie Island on a PVRR basis and the power uprate was $519 million less than the next best option.

Table 1-2
PVRR Analysis

PVRR (thousands)	Replacement	Power Uprate
Prairie Island	$61,875	$61,356
Super Critical Pulverized Coal w/ 50% Sequestraton	$64,068	N/A
Natural Gas Combined Cycle	$62,938	N/A
Coal PPA	N/A	$61,974
Biomass	N/A	$62,535
Unconstrained (Natural Gas Combustion Turbine)	N/A	$61,875

Our analysis confirms that the alternatives do not offer more financially or environmentally prudent resources - demonstrating that the proposed Prairie Island projects are the most reasonable and prudent alternatives available to meet our customers' needs.

> *C. By a preponderance of the evidence on the record, the proposed facility, or a suitable modification of the facility, will provide benefits to society in a manner compatible with protecting the natural and socioeconomic environments, including human health,*

The Prairie Island projects provide multiple benefits to our customers and to society. The projects serve our customers' current and growing needs with significantly fewer environmental impacts than the alternatives. The continued operation of Prairie Island will result in between 88 and 107 million tons of carbon from not being released to the atmosphere as compare to the coal with partial sequestration and combined cycle alternatives. The power uprate alternatives would have increased carbon emissions by 16 million tons for the natural gas combustion turbine, 32 million tons for the biomass plant and 65 million tons from the coal PPA versus no carbon increase due to the power uprate. This result stems from the emission-free nuclear resource replacing energy and capacity from existing and future fossil fuel resources.

Additionally, since both projects are located at existing sites (plant and ISFSI) and the footprint of the existing sites will not be expanded due to the projects, society benefits by not developing new green-field sites. The changes for the power uprate will almost exclusively take place within the confines of existing buildings. Since the increase in on and off-site dose and cumulative radiation dose is minimal and will remain well below the federal regulatory limits, human health will not be negatively affected.

> *D. The record does not demonstrate that the design, construction, or operation of the proposed facility, or a suitable modification of the facility, will fail to comply with relevant policies, rules, and regulations of other state and federal agencies and local governments.*

The Prairie Island projects are highly regulated by the NRC. The projects are being designed, implemented, and will be operated in compliance with stringent NRC requirements. The NRC will review the projects per their ISFSI operating license renewal process and the license amendment process to grant approval for more than the currently authorized 48 casks, and through the extended power uprate review process. The review processes will result in changes to multiple plant licenses.

The continued operation and expansion of Prairie Island is an integral piece of our strategy to meet and advance Minnesota's new energy policies established by the Next Generation Energy Act of 2007. The projects also meet the State's policy favoring non-proliferation of transmission corridors by utilizing an existing generation site to produce additional energy and capacity and existing transmission facilities.[4]

1.12 Conclusion

The proposed projects at Prairie Island are the most cost-effective alternatives to meet our customers' energy needs under a wide variety of assumptions. The continued and expanded operation of Prairie Island also provides significant environmental benefits. The projects will take place at existing sites – potentially eliminating the development of multiple new greenfield sites. The projects will enable us to minimize the amount of greenhouse gases and other emissions released to the atmosphere from our generation fleet and the project provide a hedge against future risks and costs by reducing our exposure to fossil-fuel prices and future environmental regulations. The projects provide multiple benefits and we are pleased to offer them for consideration.

---

[4] P*eople for Environmental Enlightenment and Responsibility PEER) v. Minnesota Environmental Quality Board,* 266NW2d858 (Minn. 1978).

2 General Information and Regulatory Permits

2.1 Section Summary

This part of our Application provides general information and regulatory requirements regarding the applicant and the proposed projects.

Pursuant to Minn. Stat. § 116C.83, Minn. Stat. § 216B.243 and Minn. R. 7855, Northern States Power Company, a Minnesota corporation ("Xcel Energy" or "the Company"), hereby petitions the Minnesota Public Utilities Commission ("the Commission") for a Certificate of Need ("CON") authorizing the use of up to 35 additional dry cask storage containers at Prairie Island Nuclear Generating Plant so that the plant can operate another 20 years beyond its currently licensed life. The Company also hereby petitions, the Commission for a Certificate of Need pursuant to Minn. Stat. § 216B.243 and Minn. R. 7849 to increase the electrical generating capacity of the Prairie Island plant by 164 MW (82 MW per unit).

2.2 General Information

The applicant's complete name and address, telephone number, and standard industrial code are:

Northern States Power Company, a Minnesota corporation ("Xcel Energy")
414 Nicollet Mall
Minneapolis, Minnesota 55401
(612) 330-5500
SIC Code: 4911

The official or agent to be contacted regarding the filing is:

Brian R. Zelenak
Manager, Regulatory Administration
414 Nicollet Mall, 7th Floor
Minneapolis, Minnesota 55401
(612) 330-5641
brian.r.zelenak@xcelenergy.com

2.3 Description of Business and Service Area

Northern States Power Company is a public utility under the laws of the state of Minnesota. Northern States Power Company and our parent public utility holding company, Xcel Energy, are Minnesota corporations headquartered in Minneapolis, Minnesota.

Xcel Energy generates, transmits, distributes, and sells electricity to residential and business customers within service territories assigned by state regulators in parts of Minnesota, Wisconsin, South Dakota, North Dakota, and the upper peninsula of Michigan. The Company owns and operates a number of electric generation facilities serving the five state area using a variety of technologies and fuels including, coal, oil, natural gas, hydropower, refuse derived fuel ("RDF") and nuclear. Wind, landfill gas, biomass and additional hydropower are also included in our generation portfolio through purchased power agreements.

Xcel Energy has 1.5 million electricity customers in our upper midwest service territory, shown in Figure 2-1.

Figure 2-1: Service Territory Map

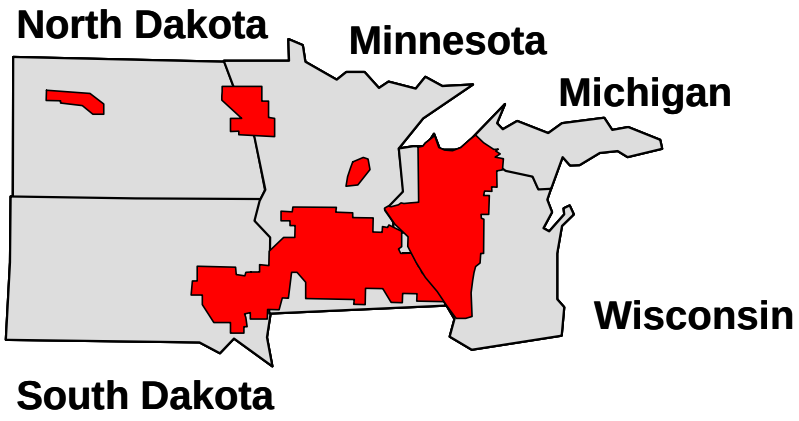

2.4 Description of Proposed Projects

The Prairie Island Nuclear Generating Plant is owned by Northern States Power Company, and operated by Nuclear Management Company, LLC ("NMC") under contract with Xcel Energy. In addition to the Prairie Island plant, NMC operates the Company's Monticello Nuclear Generating Plant.[5]

[5] The reintegration of NMC into Xcel Energy is in process and is expected to be completed by mid-year 2008.

2.4.1 Additional Dry Cask Storage CON Description

Xcel Energy proposes to increase the spent fuel storage at the Prairie Island plant located in Red Wing, Minnesota. Additional storage is needed so that Prairie Island can continue to operate beyond the current operating licenses that expire in 2013 and 2014. Our application requests the Commission grant a CON for up to 35 additional dry storage casks and associated equipment to accommodate plant operation through 2034. Sixty-four (64) casks will ultimately be needed to allow Prairie Island to operate an additional 20 years.[6] The additional casks would be placed on two concrete pads to be added inside the existing storage facility, known as the ISFSI. It is not necessary to expand the footprint of the existing ISFSI to accommodate the new concrete pads.

A more detailed description of the proposal for additional dry cask storage is contained in Section 3A of the application.

2.4.2 Extended Power Uprate CON Description

The proposed power uprate project will increase reactor power from the current licensed thermal power level of 1650 MWt to 1805 MWt. The corresponding increase in net generator output is estimated at 82 MW per unit.

The power uprate project will take place over two refueling outages and will require few modifications to the reactor and the reactor support systems that produce steam. The additional power from the power uprate project will be achieved primarily by: 1) increasing the amount of steam produced in the reactor, and 2) improving the balance-of-plant equipment that converts the steam into electricity. To obtain the higher steam flow, the reactor will be operated at a higher thermal power level. A higher thermal level is achieved by using a fuel assembly that has slightly larger diameter fuel pellets and rods resulting in slightly more uranium in each fuel assembly and more surface area on the fuel rods for increased heat transfer.

The balance-of-plant systems that convert the steam produced into electricity, will need modifications. These modifications will be made during the planned 2012 and 2015 refueling outages. Some of the more significant balance-of-plant changes will be the replacement of, or modifications to, the high-pressure turbines; main generator windings; generator step-up transformers; moisture separator reheaters; and an upgrade to the isophase bus duct cooling.

[6] As discussed further in this Application, the power uprate will not require additional dry storage casks.

2.5 Other Filings, Regulatory Requirements, and Permits Required

A number of permits or approvals must be obtained to increase spent nuclear fuel storage and to increase the power output of Prairie Island.

2.5.1 Additional Dry Cask Storage Filings/Approvals

1) A Certificate of Need authorizing the storage facility and additional casks must be obtained from the Minnesota Public Utilities Commission (Minn. Stat. § 116C.83 and § 216B.243, Minn. R. 7855);

2) Three NRC licenses or license amendments will be required to support the additional casks: (a) approval of the enhanced TN-40HT cask; (b) renewal of the current ISFSI license that is set to expire in 2013; and (c) an amendment to the current ISFSI license to increase the number of casks beyond the 48 currently authorized by the NRC. All NRC filings are subject to the requirements established by the NRC for the design, construction, and operation of an ISFSI and the use of storage containers must be complied with (Title 10, Code of Federal Regulations, Part 72).

2.5.1.1 Certificate of Need – Minnesota Public Utilities Commission

Pursuant to Minn. Stat. § 116C.83, we must obtain a CON from the Commission before additional dry storage casks can be used at the spent fuel storage facility at Prairie Island.

116C.83, subd. 2. Commission process for future additional authorization.

Authorization of any additional dry cask storage other than that provided for in subdivision 1, or expansion or establishment of an independent spent-fuel storage facility at a nuclear generation facility in this state, is subject to approval of a certificate of need by the Public Utilities Commission pursuant to section 216B.243. In any proceeding under this subdivision, the commission may make a decision that could result in a shutdown of a nuclear generating facility. In considering an application for a certificate of need pursuant to this subdivision, the commission may consider whether the public utility that owns the nuclear generation facility in the state is in compliance with section 216B.1691 and the utility's past performance under that section.

Under Minn. Stat. § 216B.243 we are also required to address the impacts of continued operations of Prairie Island beyond 2014.

> *216B.243, subd. 3b.*
>
> *Nuclear power plant; new construction prohibited; relicensing.*
> *Any certificate of need for additional storage of spent nuclear fuel for a facility seeking a license extension shall address the impacts of continued operations over the period for which approval is sought.*

Once a Certificate of Need decision has been made by the Commission, Minn. Stat. § 116C.83, subd. 3 provides the Minnesota legislature with the opportunity to review the Commission's decision during the next legislative session.

> *116C.83, subd. 3a. Authorization for additional dry cask storage/Legislative review.*
>
> *To allow opportunity for review by the legislature, a decision by the commission on an application for a certificate of need pursuant to subdivision 2 is stayed until the June 1 following the next regular annual session of the legislature that begins after the date of the commission decision. By January 15 of the year of that legislative session, the commission shall issue a report to the chairs of the house and senate committees with jurisdiction over energy and environmental policy issues, providing a summary of the commission's decision and the grounds for that decision, the alternatives considered and rejected by the commission, and the reasons for rejecting those alternatives. If the legislature does not modify or reject the commission's decision by law enacted during that regular legislative session, the commission's decision shall become effective on the expiration of the stay.*

2.5.1.2 Spent Nuclear Fuel Storage Regulations, 10 CFR 72 - Nuclear Regulatory Commission

The Prairie Island ISFSI is currently licensed to store spent fuel in up to 48 TN-40 vertical metal casks (24 on each of the two storage pads), under the existing site-specific license issued in October 1993 (License No. SNM-2506). To fully implement the additional storage requested in this Application, the following three license amendments will be submitted to the NRC:

1) The first required license amendment request is to certify that an enhanced version of the TN-40 cask, referred to as the TN-40HT cask, complies with the requirements of 10 CFR 72. The TN-40HT is very similar to the TN-40 cask in dimensions, storage capacity, and operation. It is designed to use the same handling, transfer and operating equipment as used for the TN-40

casks. The enhancements involve features that improve heat transfer and neutron absorption. These features will enable the TN-40HT casks to store fuel assemblies that have a higher uranium-235 enrichment and higher burn-up, i.e. energy per fuel assembly. The license amendment request was submitted March 28, 2008. The expected NRC approval date is approximately March 2009.

2) The second license amendment request is to renew the Prairie Island ISFSI license, (No. SNM-2506). The license was issued in October 1993 with a 20-year term. Therefore, to continue operation beyond October 2013, the license must be renewed. Per 10 CFR 72.42, the application for renewal of a license must be filed at least two years prior to the expiration of the existing license. Therefore, a submittal will be made prior to October 2011 and it is anticipated that the NRC will renew the license prior to October 2013.

3) The third license amendment request would be to increase the allowed storage beyond the current NRC approved 48-cask limit. To house up to 35 additional casks, two new concrete storage pads designed for a single row of casks will be constructed adjacent to the south side of the existing pads. Since the cask loading plans do not call for the utilization of these new storage pads until 2022, it is projected that the installation of the pads would not occur until 2020. To support this timeline, it is projected that the license amendment request would be submitted to the NRC sometime in 2018 with an anticipated NRC approval in 2019.

Although not required for spent fuel storage at the ISFSI, there are two additional NRC submittals that may be of interest to the Commission. On August 7, 2006 the designer of the TN-40 casks, Transnuclear Inc., made a submittal to the NRC requesting a transportation license for the TN-40 casks pursuant to 10 CFR 71. It is anticipated that the NRC will issue this license in late 2008. After the NRC has approved the TN-40 casks for transportation, Transnuclear plans to submit a license amendment request to license the TN-40HT cask design for transportation. It is anticipated that the NRC would approve that amendment some time in 2009.

Additionally, on April 15, 2008 we submitted an operating license renewal application to the NRC to allow continued operation of Prairie Island until 2033 and 2034.

2.5.2 Power Uprate Filings/Approvals

In order to increase the generating capacity of the Prairie Island plant, we must comply with three principal sets of requirements.

1) A Certificate of Need authorizing the power uprate must be obtained from the Commission (Minn. Stat. § 216B.243, Minn. R. Part 7849);

2) A Site Permit authorizing the power uprate must be obtained from the Commission (Minn. Stat. § 216E.03);[7] and

3) An operating license amendment from the NRC must be obtained authorizing Prairie Island to operate at the increased thermal power level and generating capacity (10 CFR 50).

2.5.2.1 Certificate of Need - Minnesota Public Utilities Commission

Minn. Stat. § 216B.243 requires a Certificate of Need be obtained before increasing the generating capacity of a plant by 50 MW or more.

> *216B.243, subd. 2. Certificate Of Need For Large Energy Facility/Certificate required.*
>
> *No large energy facility shall be sited or constructed in Minnesota without the issuance of a certificate of need by the commission pursuant to sections 216C.05 to 216C.30 and this section and consistent with the criteria for assessment of need.*

We are seeking a CON for our proposal to increase the electrical generating capacity of Prairie Island by 164 MW or 82 MW per unit. A more detailed description of our proposal is contained in Section 3 of this application.

[7] A site permit is required before any person may construct any large electric power generating plant (50 MW or more). *See* Minn. Stat. § 216E.03, subd. 1. The definition of "construction" in the Minnesota Power Plant Siting Act ("Siting Act") states: "'Construction' means any clearing of land, excavation, or other action that would adversely affect the natural environment of the site or route but does not include changes needed for temporary use of sites or routes for non-utility purposes, or uses in securing survey or geological data, including necessary borings to ascertain foundation conditions." Minn. Stat. § 216E.01, subd. 3. The Prairie Island site exists with the "natural environment" already affected by the present plant. For purposes of triggering the Siting Act, the question is whether the uprate project as proposed would: "adversely affect the natural environment of the site." If the only outside plant activities occur on portions of the site that already contain plant facilities and do not "adversely affect the natural environment," the Siting Act may not be applicable.

2.5.2.2 LEPGP Site Permit - Minnesota Public Utilities Commission

Pursuant to Minn. Stat. § 216E.03, subd. 1, no person may construct a large electric power generating plant without first obtaining a Site Permit from the Commission.

> *216E.03, subd. 1. Designating Sites And Routes/Site permit.*
>
> *No person may construct a large electric generating plant without a site permit from the commission. A large electric generating plant may be constructed only on a site approved by the commission. The commission must incorporate into one proceeding the route selection for a high-voltage transmission line that is directly associated with and necessary to interconnect the large electric generating plant to the transmission system and whose need is certified under section 216B.243.*

We will be submitting our Site Permit Application to the Commission shortly after this application so that the commission can consolidate its Need and Siting processes if it so chooses.

2.5.2.3 Operating License Amendment—Nuclear Regulatory Commission

The NRC is responsible for overseeing the safe operation of nuclear generation facilities. The NRC regulates the radiological, engineering, health and safety standards applicable to operating the Prairie Island plant. Therefore, we must obtain an amendment to Prairie Island's operating licenses from the NRC prior to operating the units at the proposed higher power level. The regulatory approval process to amend a nuclear facility's operating licenses and technical specifications is governed by Title 10 of the Code of Federal Regulations, Part 50. The operating license amendment for power uprate will be filed in 2010 and obtained prior to operating the plant at higher thermal or electrical levels.

Additionally, the change to the larger diameter fuel rods will require NRC approval. The switch to the new fuel will take place over time prior to the implementation of the power uprate. We will file for approval of the new fuel in mid 2008 and anticipate a decision by mid 2009. This will allow us to start utilizing the new fuel in the reactors starting with the 2009 fall outage, so that

we have a full core of the new fuel by the 2012 outage when we implement the power uprate project.[8]

2.5.3. Minnesota Environmental Review

2.5.3.1 Dry Storage Environmental Impact Statement

Minn. Stat. § 116C.83, subd. 6(b) requires an Environmental Impact Statement ("EIS") be prepared by the Department of Commerce, Office of Energy Security ("DOC") pursuant to Minn. Stat. 116D, the Minnesota Environmental Policy Act:

> *116C.83, subd. 6(b)*
>
> *An environmental impact statement is required under chapter 116D for a proposal to construct and operate a new or expanded independent spent-fuel storage installation. The Commissioner of the Department of Commerce is the responsible governmental unit for the environmental impact statement. Prior to finding the statement adequate, the commissioner must find that the applicant has demonstrated that the facility is designed to provide a reasonable expectation that the operation of the facility will not result in groundwater contamination in excess of the standards established in section 116C.76, subdivision 1, clauses (1) to (3).*

The DOC must prepare an EIS, which identifies and assesses the potential environmental impacts of the proposed project, including the environmental impacts of alternatives and potential mitigation measures. The EIS process does not represent a separate approval process for the additional dry cask storage. The purpose of the EIS is to inform the Commission of the potential environmental consequences and potential mitigation measures relating to the proposed project. The environmental review process also provides an opportunity for substantial public participation in identifying and evaluating the potential environmental impacts of the proposed project.

Once our applications are received, the DOC will begin the process of developing a document that describes the scope of issues to be addressed in the EIS. The draft-scoping document will identify and discuss the potential environmental impacts of the proposed project that should be addressed in the EIS. This draft-scoping document will be published to allow for public comment. After comments are

[8] Switching to the larger diameter fuel pins may provide benefits even if the power uprate project is not implemented. For example, it may give us the potential for longer fuel cycles resulting in less used fuel assemblies over the life of the plant.

[9] As noted above, Minn. Stat. § 216E.03, subd. 5, also requires the DOC to prepare an EIS in connection with the site permit for the power uprate project. Minn. R.

received, the DOC will prepare a final scoping order. After the scoping order is issued, the DOC will prepare a draft EIS. The draft EIS will then be published to allow for public comment. After the close of the public comment period, the DOC will prepare a final EIS and deliver it to the Commission to assist the Commission in making its final determination regarding the CON Application.

We anticipate the EIS process will take approximately nine months to a year to complete.

2.5.3.2 Power Uprate Environmental Report

Minn. R. 7849.7030 requires the DOC to prepare an environmental report to assist the Commission in determining whether to approve the request for the power uprate.

> *7849.7030 Environmental Report.*
>
> *The commissioner of the Department of Commerce shall prepare an environmental report on a proposed high voltage transmission line or a proposed large electric power generating plant at the need stage. The environmental report must contain information on the human and environmental impacts of the proposed project associated with the size, type, and timing of the project, system configurations, and voltage. The environmental report must also contain information on alternatives to the proposed project and shall address mitigating measures for anticipated adverse impacts. The commissioner shall be responsible for the completeness and accuracy of all information in the environmental report.*

The DOC must provide the commission the environmental report before the Commission can hold a public hearing or render a final decision on the Application. The Commission must consider the environmental report before making its final decision.

It is our intent to file the required Site Permit for the power uprate project within a few weeks of this Application. Since we will apply for a site permit for the power uprate prior to the time the DOC completes the environmental report, the Commission may elect to prepare an Environmental Impact Statement in lieu of the environmental report required under part 7849.7030, (Minn. R. 7849.7100, subp. 2.) We anticipate the DOC will consolidate environmental review by publishing one EIS to address both additional spent fuel storage and power uprate projects.

2.5.4 Resource Plan

Pursuant to Minn. Stat. § 216B. 2422, we are required to periodically submit a resource plan to the Commission. In our resource plan we examine the need for electricity over a 15-year planning period, evaluate a broad spectrum of alternatives to meet the anticipated demand for power, and present our preferred plan. The Commission then accepts, modifies, or rejects the plan. The process includes opportunities for comments including alternative resource plan proposals and, if necessary, provides for public meetings and hearings. The proceeding typically takes over a year to complete.

We filed our most recent Resource Plan on December 14, 2007 ("2007 Resource Plan"). Our resource plan filing contains much of the same information contained in this Certificate of Need Application about the role Prairie Island plays in meeting the demand for electricity as well as the alternatives to continuing to operate Prairie Island.

The focus of our Resource Plan is how best to meet the growing demand for electricity while accounting for the impacts on recent legislation expanding renewable energy and energy conservation considerably.

2.5.5 Other Project Permits

In addition to the State and NRC permits mentioned above, the project will require interconnection approval and an updated transmission service agreement with the Midwest Independent System Operator ("MISO"). At this time we have not filed the generator interconnection request or the request for transmission service. We are working with MISO on the review process and will file the appropriate requests prior to the projects implementation.

We have identified no other required permits necessary for the additional dry cask storage or the power uprate projects at Prairie Island.[10] Since the additional dry cask storage and the power uprate CONs are both for existing facilities, we already possess a number of the necessary operating permits. After reviewing the Air Quality, Water Appropriations and Wastewater Discharge Permits, it is not anticipated any of these will require amendments.

[10] No additional dry cask dry storage is necessary to support the Prairie Island project.

If a Site Permit is issued for the power uprate CON, no other zoning, building or land use rules by a regional, county or local government apply. See Minn. Stat. § 216E.10.

2.6 Fee Determination

2.6.1 Additional Dry Cask Storage

Minn. R. 7855.0210 subp. 1.E. establishes a fee of "$20,000, plus such additional fees as are reasonably necessary for completion of the evaluation of need" for a Certificate of Need for spent fuel nuclear fuel storage. A check for $20,000 was submitted to the Commission under separate cover, simultaneously with this Application. It is our understanding that the Commission staff will determine the amount and timing of additional fees and request additional payments as necessary as this proceeding moves forward.

2.6.2 Power Uprate

Minn. R. 7849.0210, subp. 1 establishes an application and processing fee of $10,000 plus $50 for each megawatt of plant capacity, plus "such additional fees as are reasonably necessary for completion of the evaluation of need for the proposed facility." Subpart 2 of the rule requires that 25 percent of the fee accompany the application with the balance paid in three equal installments within 45, 90, and 135 days after submission of the application. The proposal will increase the generating capacity of Prairie Island by an estimated 164 MW, resulting in a total fee of $18,200.

A check for $4,550 (25 percent) was sent under separate cover to the Commission simultaneously with the filing of this Application. Thus, an additional $13,650 must be paid in three installments of $4,550. We will file the additional payments at the required 45, 90 and 135-day intervals.

2.7 Officer Certification

Pursuant to Minn. Stat. § 116C.83 and Minn. Stat. § 216B.243 and Minn. R. 7855, Xcel Energy does hereby petition the Commission for a Certificate of Need to add 35 additional casks within the existing ISFSI, and the associated facilities and equipment to support operations at the Prairie Island Nuclear Generating Plant until 2033 and 2034.

/s/

_____.

Scott M. Wilensky
Acting Vice President,
Government and Regulatory Affairs

3 Prairie Island Plant Information and Project Description

3.1 General Plant Information

Prairie Island uses nuclear fuel in two two-loop pressurized water reactors to produce on average a nominal value of 550 megawatts of electrical power in each unit. Unit 1 began commercial operation in December 1973, and Unit 2 began operations in December 1974. The initial NRC license for each unit was for a period of 40 years. The original NRC licenses are currently scheduled to expire in 2013 and 2014 for Unit 1 and Unit 2, respectively. The Company applied to the NRC to renew the operating licenses for both units for an additional 20 years in April 2008.

Prairie Island is located within the city limits of Red Wing, Minnesota in Goodhue County, on the western bank of the Mississippi River, in Section 4 and 5, T–113N, R–15W, at 44° 37.3' N latitude and 92° 37.9' W longitude, approximately 30 miles southeast of Minneapolis/St. Paul (Figures 3-1 and 3-2).

The Prairie Island site consists of approximately 560 acres of land owned by Xcel Energy. A perimeter fence and other barriers restrict access to Prairie Island.

Figure 3-3 shows an aerial photo depicting a 1-mile radius around Prairie Island. Figure 3-4 shows an aerial photo depicting a 2-mile radius around Prairie Island.

Over the past five years (2003 through 2007), Prairie Island has maintained an average capacity factor of 90.2 percent. In 2007, Prairie Island generated a record almost 9 million megawatt-hours of electricity, eclipsing its prior record set in 2003. For 2007, the capacity factor for the entire year was 93.85 percent.

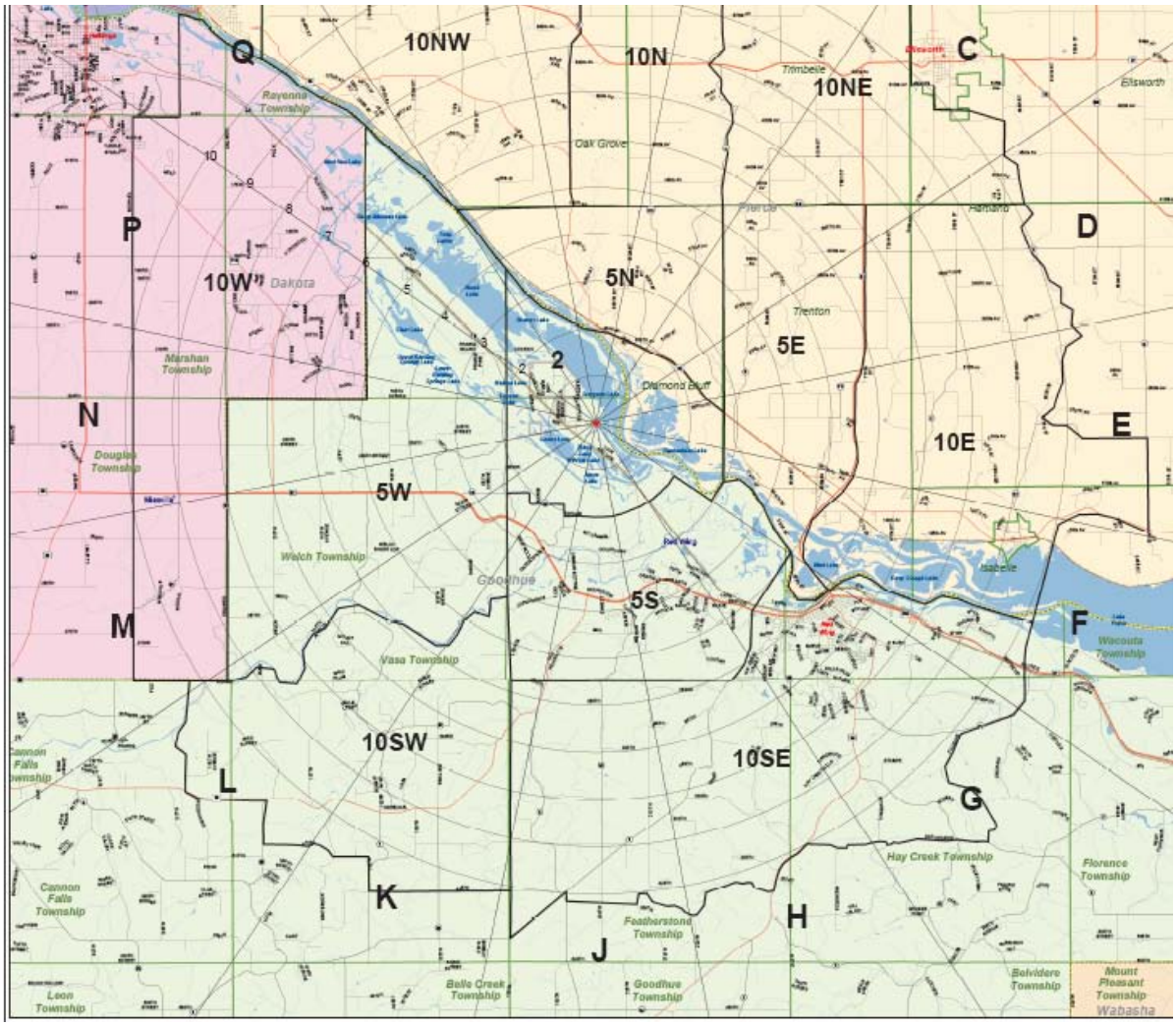

Figure 3-1: 50-mile Radius

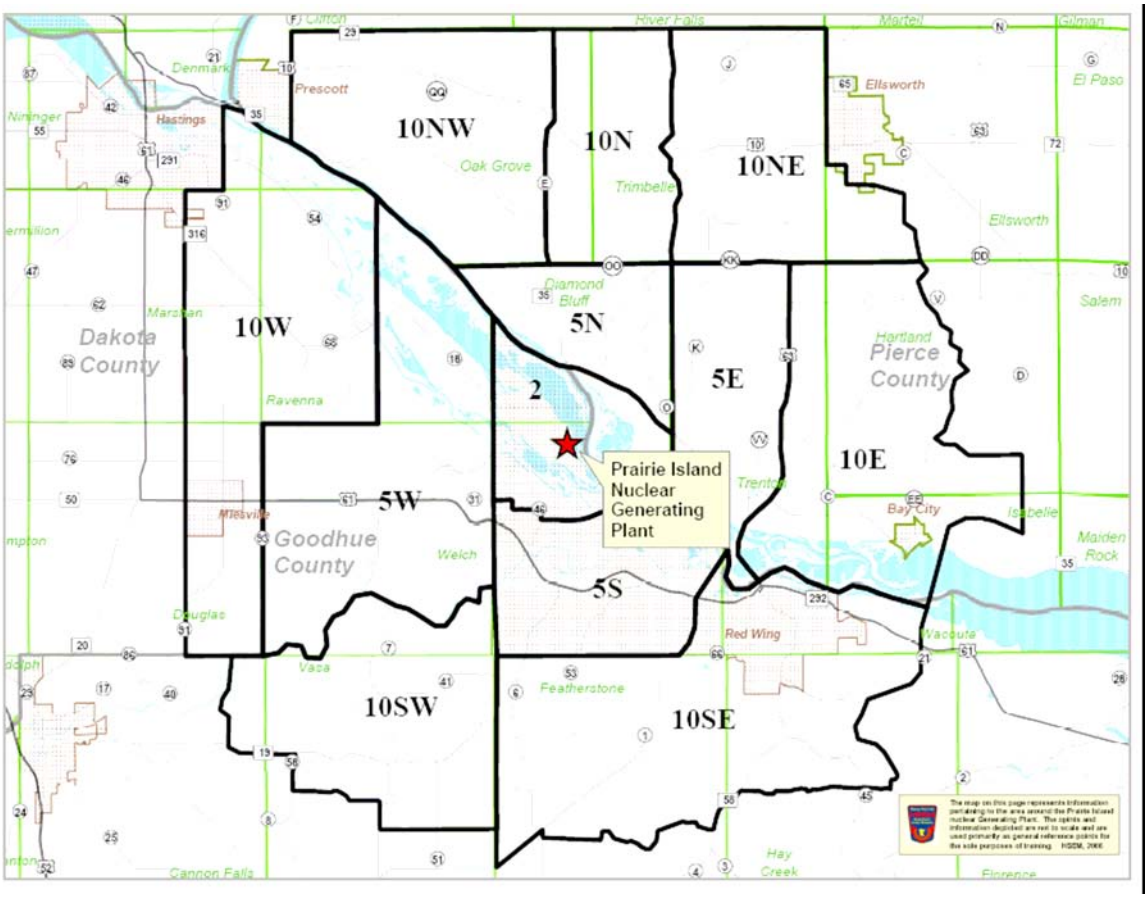

Figure 3-2: Ten mile Radius

Figure 3-3: One-mile Radius

Figure 3-4: Two-mile Radius

3.2 Pressure Water Reactor Operation

In a pressurized water reactor, a nuclear reaction in the reactor core generates heat, which heats water in the primary loop. This heat is transferred to the secondary loop in the steam generators, and the steam produced inside the steam generators is directed to turbine generators to produce electrical power (Figure 3-5). The exhaust steam is cooled by a tertiary loop in a condenser and returned to the steam generators to be boiled again. The water in all three loops is force-circulated by electrically powered pumps. Emergency cooling water is supplied by other pumps, which can be powered by on-site diesel generators.

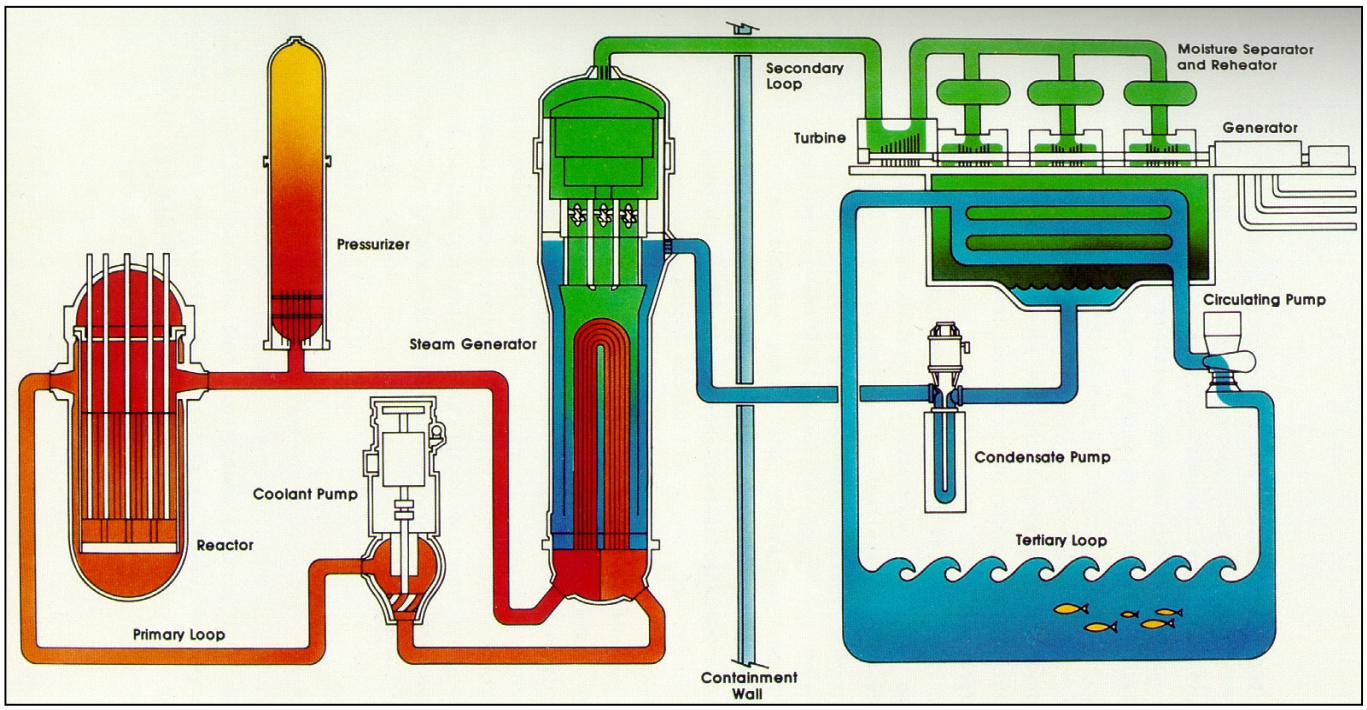

Figure 3-5: Pressurized Water Reactor System

3.3 Description of Fuel and Operating Cycle

The nuclear fuel used at Prairie Island has, to date, been fabricated by the Westinghouse and Exxon companies. The new fuel is transported to Prairie Island by truck. Westinghouse was the original plant designer and has supplied Prairie Island with most of its fuel and is anticipated to be the future fuel supplier.

The reactor core of each unit is comprised of 121 fuel assemblies. A fuel assembly (Figure 3-6) consists of 179 fuel rods spaced in a 14x14 square array secured by means of stainless steel upper and lower tie plates. Control rod guide tubes occupy sixteen locations of the array and an instrument tube occupies one location. Each fuel assembly is 7.76 by 7.76 inches wide and 161.3 inches long. Figure 3-6 shows a representation of a typical fuel assembly used at Prairie Island.

Each fuel rod within the assembly consists of high-density ceramic uranium dioxide fuel pellets, each about the size of a thimble, stacked in a tube made of a special alloy of steel called Zircaloy. The air in the filled tube is evacuated, helium (an inert gas) is backfilled, and welding Zircaloy plugs in each end seals the fuel rod.

Approximately every 18 to 20 months, a unit is shut down to refuel the reactor. Between refueling outages the unit typically operates at full output around the clock. During each refueling operation under current power levels, a little more than a third of the fuel assemblies (typically 48), in the reactor are replaced with new ones. Thus, a typical nuclear fuel assembly provides heat constantly over about a five-year period before its output declines to the point it is no longer useful. These spent nuclear fuel assemblies are then removed from the reactor and stored in the spent fuel pool.

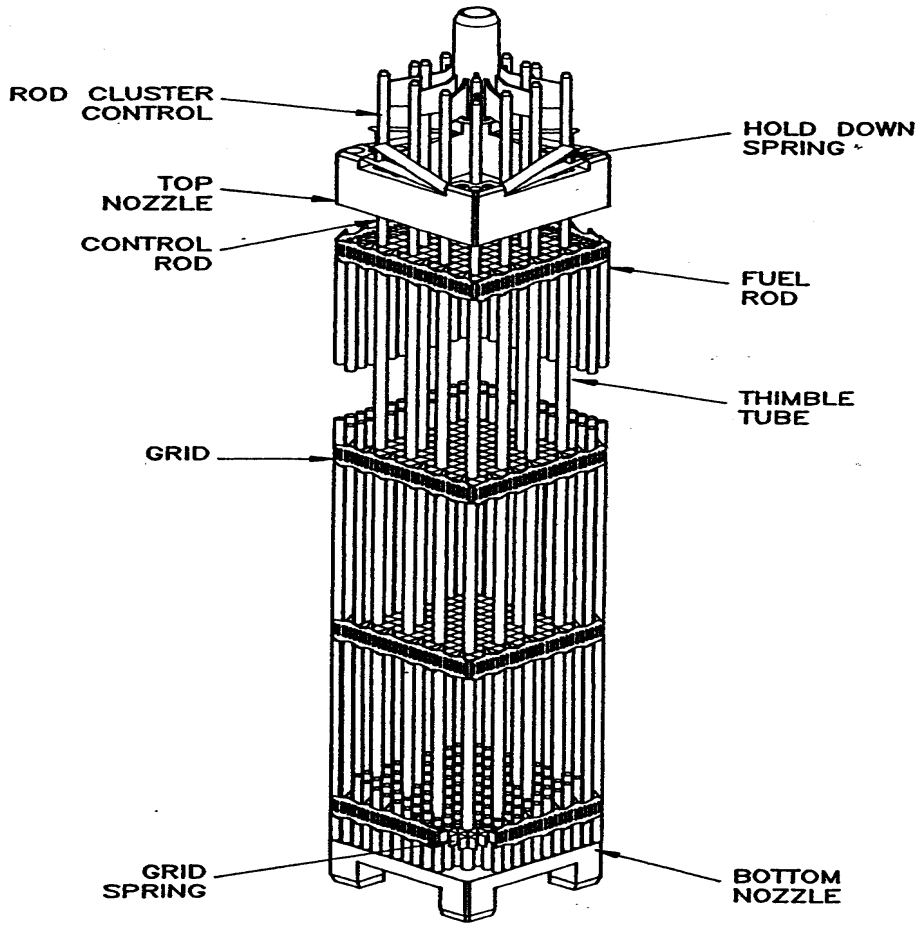

Figure 3-6: Fuel Assembly

3.4 Fuel Availability

Continued availability of uranium to support the continued operation of Prairie Island and the power uprate project is not in question. The Organization for

Economic Cooperation and Development ("OECD") and the International Atomic Energy Agency ("IAEA") in 2005 jointly produced a report on uranium resources. The report states that uranium resources are adequate to meet the needs of both existing and projected reactors. Both the OECD and IAEA believe uranium supplies are adequate to meet the needs of nuclear power plants worldwide, as well as new reactors anticipated in the next decade. The agencies base their conclusion on official projections from 43 uranium-producing countries, as well as independent studies by the agencies.

3.5 Spent Fuel Pool

The spent fuel pool provides storage for spent fuel assemblies. The pool is located within the fuel pool enclosure in the auxiliary building. It is filled with storage racks that hold the spent fuel assemblies and other irradiated reactor components. The depth of water in the pool is 37 feet 9 inches. Figure 3-7 shows the spent fuel pool. The spent fuel pool is equipped with redundant cooling systems to remove heat that continues to be generated by the assemblies. The filtering portion of the system maintains pool water chemistry and removes suspended particles. The water above the spent fuel also provides radiation shielding. The spent fuel pool also provides an area for cask loading operations. Space is set aside so that a cask may be lowered into the pool and assemblies transferred to it for dry storage or transport. Spent fuel assemblies are placed in the pool for between 10 and 12 years to cool before they can be placed in casks for storage.

The NRC operating licenses allow for long-term storage of up to 1,386 spent fuel assemblies in the current spent fuel storage rack configuration. To facilitate plant evolutions, four additional storage racks, with a combined capacity of 196 assemblies may be temporarily installed in the cask lay down area to provide a total of 1,582 storage locations. The fuel rods from 36 consolidated assemblies are stored in 18 canisters, occupying 18 storage rack locations. A total of 52 storage locations hold material such as spent fuel assembly components from the consolidated assemblies, individual fuel rods, and other irradiated reactor instrumentation and hardware. Thus, there are 1,316 locations available for long term spent nuclear fuel assembly storage.

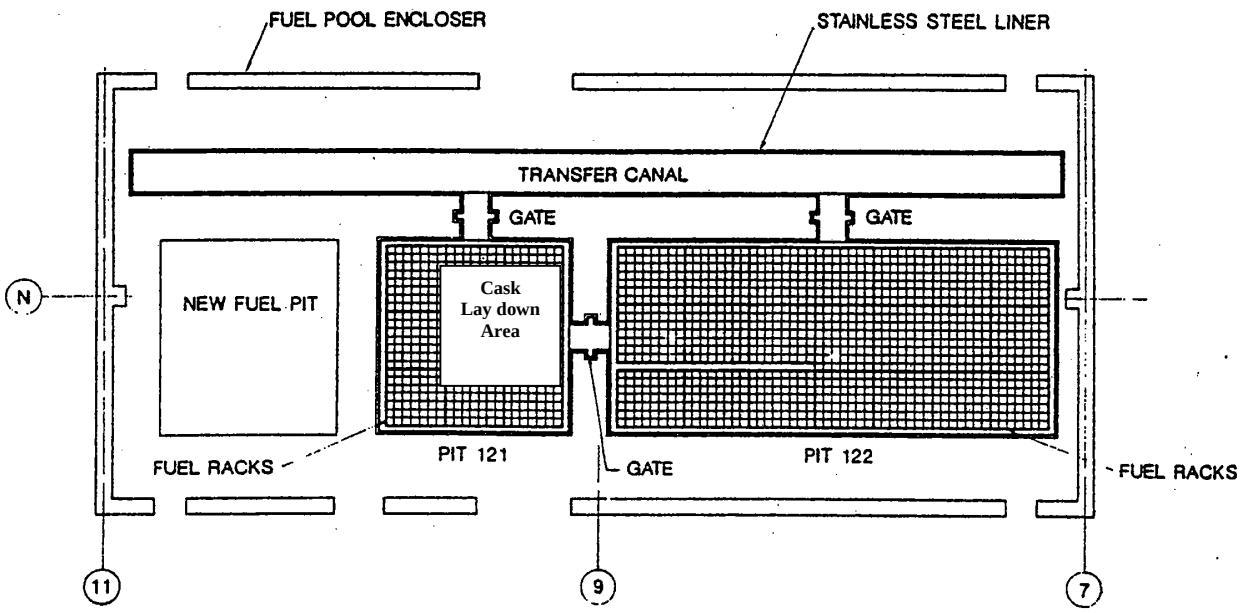

Figure 3-7: Spent Fuel Pool

As of April 15, 2008, 2,109 spent fuel assemblies have been discharged from Prairie Island's reactors of which 1,842 reside in the spent fuel pool and 960 in 24 dry casks.

Prairie Island maintains the ability to temporarily remove all of the fuel from both reactors (referred to as full core offload capability) with the use of temporary racks that could be installed in the dry cask storage lay down area of the spent fuel pool. Maintaining full core offload capability is not necessary for safe plant operation. It is retained for economic reasons and operational flexibility. We estimate that 3,895 spent fuel assemblies will be discharged from Prairie Island's reactors during operation between April 15, 2008 and 2034. Table 3-1 provides an estimate of the number of spent fuel assemblies that will be discharged from Prairie Island's reactors. The spent fuel assemblies that will need to be discharged to offload the number of reactors at the end of the extended operating life are also provided in Table 3-1.

Table 3-1			
Prairie Island Spent Fuel Assemblies			
Year	**Number of Additional Spent Fuel Assemblies Discharged During Unit 1 Refueling**	**Number of Additional Spent Fuel Assemblies Discharged During Unit 2 Refueling**	**Total Number of Spent Fuel Assemblies Produced at Prairie Island**
As 4/15/2008			2109
Remainder of 2008		49	2158
2009	49		2207
2010		56	2263
2011	44		2307
2012	44	45	2396
2013		44	2440
2014	49		2489
2015	48	48	2585
2016		49	2634
2017	48		2682
2018	49	48	2779
2019		48	2827
2020	48		2875
2021	48	49	2972
2022		48	3020
2023	49		3069
2024	48	48	3165
2025		49	3214
2026	48		3262
2027	49	48	3359
2028		48	3407
2029	48		3455
2030	48	49	3552
2031		48	3600
2032	40		3640
2033	121	13	3774
2034		121	3895

3A Additional Dry Cask Storage Project Description

3A.1 Additional Dry Cask Storage Proposal

We propose to provide additional dry cask storage at Prairie Island by extending the concrete storage pads within the existing Independent Spent Fuel Storage Installation ("ISFSI") already located at Prairie Island.

Figure 3-8: ISFSI and Plant Site

The ISFSI consists of a lighted area, approximately 720 feet long and 340 feet wide, roughly 5-1/2 acres in size, located west of Prairie Island cooling towers as shown on Figure 3-8. The tallest structures are the light poles that are approximately 40 feet tall. Two fences surround the facility with a monitored, clear zone between the two fences. Within the storage area, the casks are currently stored on two reinforced concrete pads, 36' x 216' x 3'. The additional casks necessary to support license renewal would reside on new 18' concrete pads to be located immediately south of each of the existing concrete pads as shown on Figure 3-9.

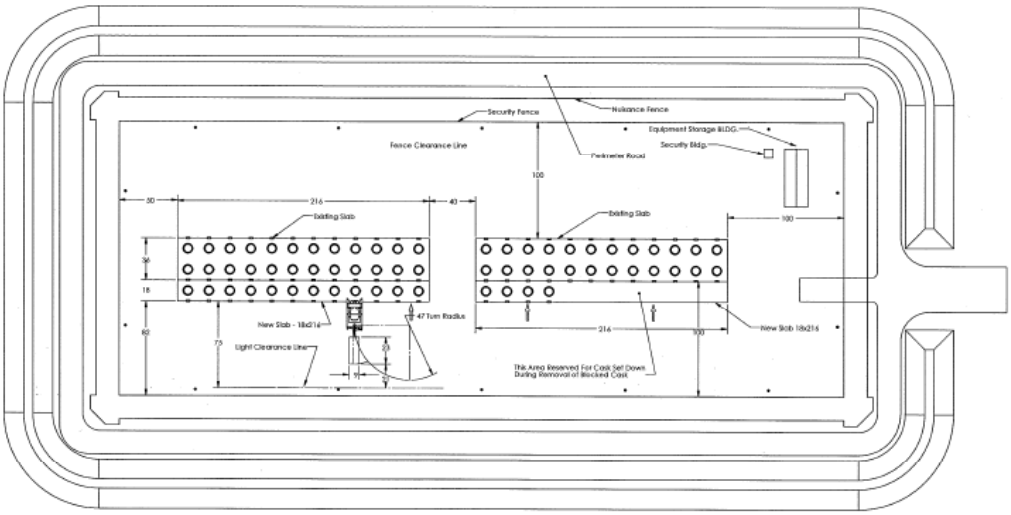

Figure 3-9: Location of New Storage Pads

The approach to the pads consists of 14 inches of MN/DOT compacted Class 5 aggregate with a 2% slope. A 30' x 50' steel frame equipment storage building approximately 30 feet high is located on the ISFSI site. The primary purpose of this building is to store the cask transport vehicle. A smaller block building within the ISFSI houses the security equipment while one outside the ISFSI houses the pressure monitoring equipment. A 17 ft high earthen berm surrounds the ISFSI. The site is monitored with cameras and other security devices. An access road connects the ISFSI to the rest of Prairie Island.

The current NRC licensed capacity of the ISFSI is specific to 48 TN-40 storage casks. The proposed extension of the storage pads will be sufficient to accommodate the additional 16 casks. The storage facility is laid out so that the storage pads could be extended to the north and south to accommodate a total of 100 casks without having to change the security perimeter. The extra space could be used for casks to decommission Prairie Island.

The proposed storage facility is intended for temporary storage. As discussed in the in Section 5 – Alternatives to Proposed Dry Cask Storage, while we do not believe that DOE will begin accepting waste at Yucca Mountain in 2017, we believe that DOE will eventually be successful in meeting its obligations and removing spent fuel from commercial nuclear generating plants. However, we believe the earliest possible date for that would be 2020. The NRC's Waste Confidence proceeding has indicated it will be no later than 2025. In light of this uncertainty and based on DOE's forecasted acceptance rates at Yucca Mountain, we believe

that the spent fuel could be stored at Prairie Island for between fifteen to thirty additional years.

We propose to continue to use dry cask storage containers that hold 40 spent fuel assemblies each. Therefore, in order to ensure Prairie Island can continue to operate through the 20 years of a renewed operating license, up to a total of 64 storage casks will be necessary.

When Prairie Island shuts down and ceases operation, the inventory of assemblies in the reactors and pool must be removed to facilitate decommissioning. It will take a total of 98 casks to store all the spent fuel that has been generated at Prairie Island. The implementation of the power uprate project will not increase the number of casks.

3A.2 Dry Cask Storage System

We propose to use an enhanced version of the current TN-40 bolted cask system called the TN-40HT Dry Fuel Storage system. The TN-40HT is designed, licensed, and manufactured by Transnuclear Inc., and will be licensed for storage and transport. The system will utilize existing equipment to load and move the cask, i.e. lifting yoke, transfer vehicle, and ancillary devices.

The system consists of the following primary components:

- TN-40HT Dry Fuel Cask – an enhanced version of the TN-40 Dry Fuel casks currently used at Prairie Island. The cask is a steel container designed to hold 40 fuel assemblies and accommodate higher enriched and burned fuel assemblies.

- Lifting Yoke – a steel-lifting device that interfaces with the crane to lift the cask.

- Transfer Vehicle – a multi-wheel trailer used to safely support and move the cask from the Auxiliary Building to the concrete storage pads at the ISFSI.

- Ancillary Devices – auxiliary equipment used to dry, and backfill the cask for storage.

- Transport Impact limiters – devices attached to the ends of the cask to lessen the forces on the cask during a hypothetical shipping accident when the casks are ultimately shipped from Prairie Island.

The TN-40 Dry Fuel Cask storage system currently in use at Prairie Island is licensed in accordance with federal regulations, 10 CFR Part 72 for storage. A license Amendment Request ("LAR") to the NRC was submitted on March 28, 2008, that demonstrates that the enhancements to the TN-40HT cask will also comply with the regulations in 10 CFR Part 72. It is anticipated the NRC will issue the amendment to the License in 2009.

In August 2006, Transnuclear applied for approval to license the TN-40 cask with impact limiters as a spent fuel Transportation Package in accordance for 10 CFR Part 71. Approval of this application is expected in 2008. Following NRC's approval, Transnuclear will request license approval of the TN-40HT package for transportation also.

3A.2.1 TN-40 Cask

The TN-40HT cask is an enhanced version of the TN-40 dry fuel storage casks (shown in Figure 3-10). The TN-40HT cask is designed to hold 40 fuel assemblies and enhancements allow for storage of higher enriched and burned fuel assemblies. A cask consists of an internal basket, containment vessel, lid, outer shell, neutron radiation shields, and a weather cover.

Figure 3-10: TN-40 Cask

The TN-40HT consists of stainless steel boxes separated by heat conduction and neutron absorption plates. The stainless steel box geometry features of the basket provide structural rigidity to support the fuel assemblies. The containment vessel is the inner most cask shell and is a 1.5-inch thick carbon steel cylinder with an integrally welded carbon steel plate at the bottom. At the top of this cylinder is a flange, which provides the positioning and sealing surface for the bolted carbon steel lid. The lid is 10 inches thick and is attached to the upper vessel flange by 48 bolts. Two metallic O-rings are installed on the lid to provide a redundant and highly reliable cask seal between the flange and the lid.

The shell is a 7.25-inch thick steel cylinder with an outside diameter of 89.5 inches. It is welded to a 7.25-inch bottom shield plate and to the containment vessel closure flange, thereby completely enclosing the containment vessel inner shell and bottom plate. Attached to the shell are resin filled containers arrayed vertically and surrounding the shell. The resin contains neutron-absorbing material to reduce the neutron radiation levels. A circular neutron shield disk provides neutron shielding on the lid during storage. In order to keep the cask lid clean and to avoid the accumulation of water in recesses of the cask lid, a torosperical weather cover is provided above the cask lid. The resultant overall dimensions of a cask are an outer diameter of 101 inches and approximately 202 inches tall.

The TN-40 cask is currently licensed to store spent fuel assemblies with a maximum burnup of 45 giga-watt days/metric ton of uranium (GWD/MTU), maximum enrichment of 3.85 wt. % U235, and a minimum cooling time of 10 years after reactor discharge. The TN-40HT cask is expected to be licensed to accommodate a maximum burnup of 60 GWD/MTU, maximum enrichment of 5.0 wt. % U235, a minimum cooling time of 12 years after reactor discharge, and a thermal capacity of 32 kW (0.8 kW per fuel assembly).

The current and projected spent fuel discharges from Prairie Island were evaluated to determine their parameters (burnup, enrichment, cooling time and thermal heat load) that might be reasonably expected for the spent fuel that would be placed into storage. It was determined that there is enough "low burnup" fuel (less than 45 GWD/MTU and 3.85 wt. % U235) to load a total 29 TN-40 casks. Starting with cask number 30, the remaining casks will need to be the TN-40HT casks.

3A.2.2 Lifting Yoke

The TN-40HT casks are being designed such that the existing Lifting Yoke assembly used for the TN-40 casks can continue to be used. (Figure 3-11). The yoke assembly provides the interface between Prairie Island crane and the cask, and

is used to maneuver the cask within the Auxiliary Building. The assembly consists of the crane hook extension and the air operated lift beam. The overall length of the assembly is sufficient to allow placement of a cask into the spent fuel pool without submersing the lifting block of the Auxiliary Building crane. Lifting pins connect the crane hook to the extension and the extension to the lifting beam. The lifting beam is a closed-hook design with two parallel beams fabricated from thick, high-strength steel plate material, with a de-contaminable coating. It is designed to be compatible with the Auxiliary Building crane hook. The lifting yoke engages the upper cask lifting trunnions via air actuated arms.

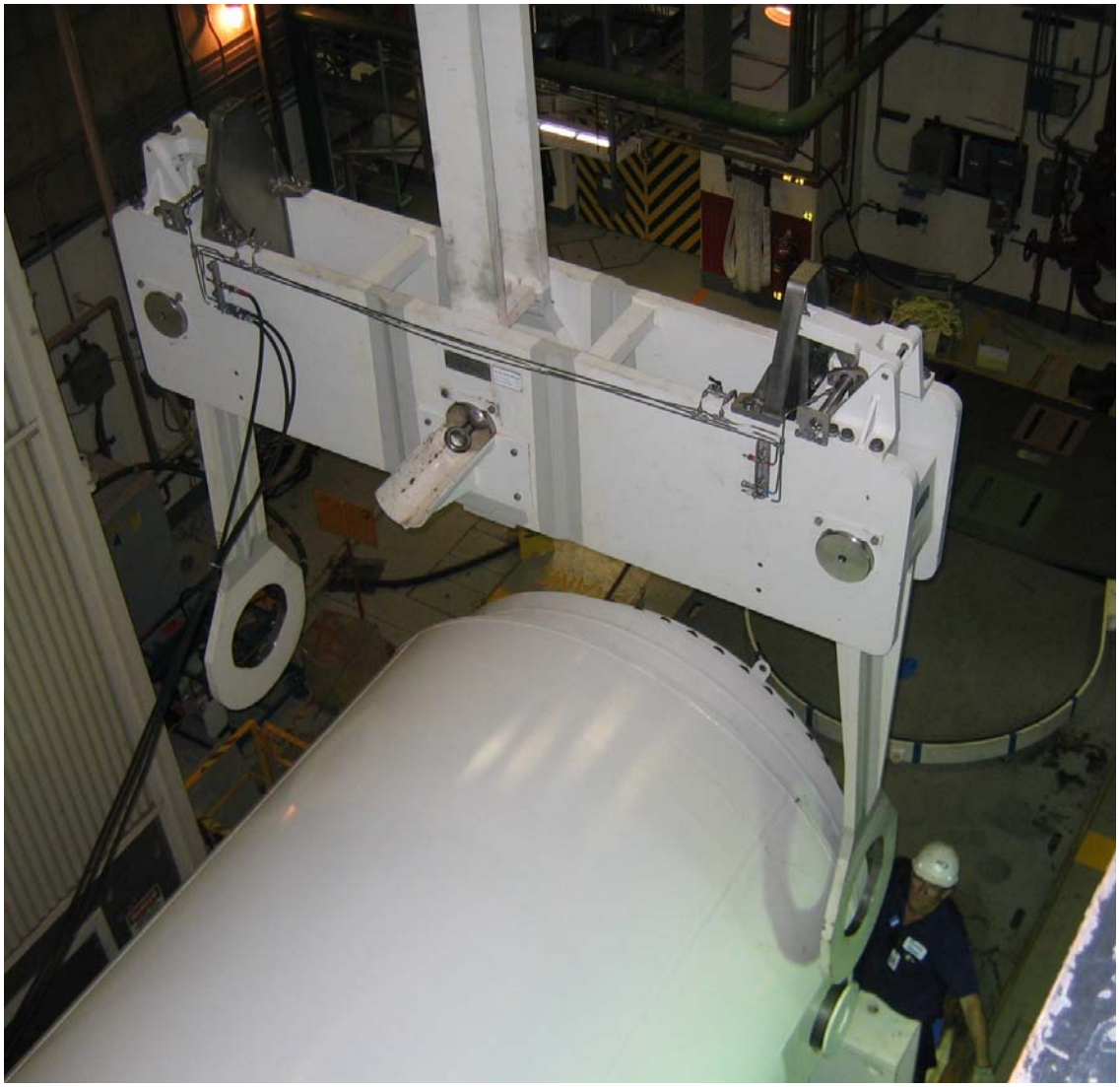

Figure 3-11: Lifting Yoke

The yoke is designed and fabricated as a non-redundant single failure-proof special lifting device for critical loads, in accordance with NRC requirements and applicable standards.

The weight and dimensions are as follows:

- Overall Length of Extension & Lifting Beam 246.83"
- Diameter of Pins 6.875"
- Weight of assembly 8,300 lbs.

3A.2.3 Transfer Trailer

The Cask Transport Vehicle ("CTV") is a trailer used to transport a loaded cask between the Auxiliary Building and the ISFSI. (Figure 3-12). The TN-40HT cask design is such that the current CTV used to transfer the TN-40 casks may also be used to transfer the TN-40HT casks.

Figure 3-12: Transfer Trailer

The CTV spreads the weight of the loaded cask over 8 tires. The wheels are arranged in four pairs. The two front pairs are steered by a tow bar and steering linkage from a separate tow vehicle. The rear wheels are designed to move inward and outward. The wheels are placed in the inward (travel) position to pass through the Auxiliary Building access door and for travel to the ISFSI. The wheels are placed in the outward (load/unload) position to provide clearance to loading and unloading a cask. (Figure 3-13). The overall transporter width in 13'-0" in the travel position and 19'-4" in the load/unload position.

Figure 3-13: The Cask Transport Vehicle

The CTV relies on electro-hydraulic power to operate the vehicle and cask hoist functions. The hoist mechanism consists of a "U" shaped steel lift beam with pivot pins at one end connected to the steel structural frame. The other end is raised and lowered by a 12-inch hydraulic cylinder. The CTV is designed to limit cask lift to a maximum of 10 inches. Hydraulic jacking pads extend to the ground to raise the rear wheels and carry the vehicle weight when changing the position of the rear wheels.

The trailer has a length of approximately 35 feet and a turning radius of 30 ft. The trailer is designed for a maximum speed of 3 mph and is capable of climbing or descending a 5% grade. However, the haul route at Prairie Island is relatively flat with a maximum slope of 2%. The maximum trailer weight with a loaded transfer cask is approximately 390,000 lbs.

3A.2.4 Vacuum Drying System

The Vacuum Drying System (Figure 3-14) removes all the moisture out of the cask after it is removed from the spent fuel pool. It enables the vacuum drying and helium backfilling operations after the fuel has been loaded, the bulk of the water is drained out, and prior to final closure. The vacuum drying system weighs 300 lbs and requires 480V, three-phase electrical power to operate.

Figure 3-14: Vacuum Drying System

3A.2.5 Transportation Impact Limiters

Following approval from the NRC, a TN-40 or TN-40HT cask may be transported offsite after performing some inspections and testing. The cask would be placed in upending/downending frame and rotated to the horizontal position. The cask would then be placed onto a transport frame and front and rear impact limiters installed. (Figure 3-15). Following final checks and preparation activities, the loaded cask would be ready for offsite shipment.

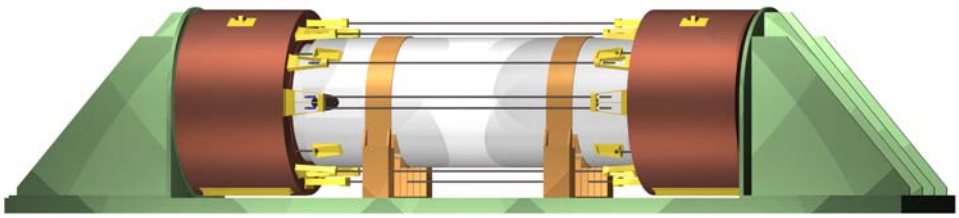

Figure 3-15: Transportation Impact Limiters

Impact limiters mounted on either end of the cask provide impact protection to meet accidental impact requirements of 10 CFR Part 71. The impact limiters absorb energy during an impact event. Each impact limiter has an outside diameter of 144 inches and a height of 50 inches. The limiter is made of wood covered by a

stainless steel shell. The overall weight of the transport package with a loaded cask and impact limiters is approximately 272,000 lbs.

3A.3 Operations

This section provides a description of the fuel loading operations for transferring spent fuel from the pool to the ISFSI, as well as the operational sequence for transporting them off-site.

3A.3.1 Canister Loading

Cask loading includes physically placing the fuel assemblies into the cask, draining, decontamination, securing the lid, and drying, and includes the following sequence of events:

1. Stage the cask inside the rail bay of the Auxiliary Building.
2. Lift the empty cask by its lifting lugs and place it vertically in cask decontamination area. (Figure 3-16).

Figure 3-16: Rail Bay Staging

3. Remove the lid and perform the receipt inspections.
4. Engage the lifting yoke with the cask upper trunnions.
5. Lift the cask up to the spent fuel pool.

6. Lower cask into the pool.

7. Load the spent fuel assemblies into the cask.

8. Install the lid underwater.

9. Engage the lifting yoke and lift the cask out of the pool water. (Figure 3-17).

Figure 3-17: Wash Down

10. Drain water from the cask.

11. Wash down the exposed portions of the cask.

12. Move to cask decontamination area. (Figure 3-18).

Figure 3-18: Decontamination

13. Decontaminate outer surfaces of cask.
14. Torque lid bolts.
15. Install drain port cover.
16. Connect the vacuum drying system to the vent port.
17. Perform vacuum drying
18. Backfill cask with helium.
19. Install vent port cover.
20. Perform helium leak test of lid seals.

3A.3.2 Transport to the ISFSI

Cask transport operations include transferring the loaded cask to the CTV, installing the top neutron shield, transporting the cask/canister to the ISFSI, and connecting the pressure monitoring system. The operations steps include:

1. Engage the lifting yoke with the cask upper trunnions.
2. Place the cask into the CTV.
3. Install top neutron shield drum.
4. Pressurize the overpressure system to approximately 72 psig.
5. Perform leak test on overpressure system.
6. Install protective weather cover.
7. Use the CTV and tow vehicle to transfer the cask to the ISFSI. (Figure 3-19)

Figure 3-19: CTV Transport

8. At the ISFSI, position the cask over the desired pad location.
9. Lower the cask onto the Pad.
10. Rotate the CTV rear wheels to the unloading position. (Figure 3-20)

Figure 3-20: Dry Cask Storage Pad

11. Remove the CTV.

12. Connect the seal pressure monitoring instrumentation.

3A.3.3 Removal for Offsite Shipment

Following licensing approval from the NRC, a loaded TN-40 or TN-40HT cask may be transported offsite. The activities in support of this operation include placing the cask in an upending/downending frame, rotating to the horizontal position, placing it onto a transport frame, installing front and rear impact limiters, and performing final checks and preparation. This includes the following sequence of events:

1. Disconnect the overpressure system.

2. Move the cask using the CTV to the loading area, e.g. the Auxiliary Building.

3. Remove the protective weather cover and top neutron shield drum.

4. Tighten lid bolts.

5. Adjust cask cavity pressure to desired value.

6. Perform helium leak test of lid seals.

7. Place cask in upending/downending frame, and rotate to the horizontal position.

8. Lift cask horizontally and place in transport frame located on transport vehicle.

9. Install the cask impact limiters.

10. Check that temperatures, radiation levels and contamination levels satisfy regulatory requirements.

11. Release cask for shipment.

3A.3.4 Decommissioning of the Storage Facility

The storage facility will be decommissioned once all spent fuel stored in it has been transported to an off-site facility. Because the storage casks will be licensed for both storage and transportation, they will ultimately be shipped to the federal government for final disposal. This leaves only the concrete storage pads and supporting infrastructure to be disposed of by Xcel Energy. Since the casks are sealed, no radioactive materials will be present once the casks and spent fuel have been shipped. No activation of the concrete in the storage pads is expected. A survey will be conducted to ensure that no activation has occurred. Once it is confirmed that no activation has occurred, the concrete storage pads and infrastructure will be dismantled, and the site will be returned to a green field state.

3A.4 Pressure Monitoring System

Even though the storage system is completely passive during operation, the 10 CFR. Part 72 storage license requires monitoring the pressure between the double seals of the casks.

The cask cavity is pressurized above atmospheric pressure with helium to preclude air in-leakage. When the cask is in storage, a pressure greater than that of the cavity is set up in the gap (interspace) between the double metallic seals of the lid and the lid penetrations. This ensures that any seal leakage will be into rather than out of the cask cavity. The pressure in this gap is monitored and a decrease in the pressure of this system would be signaled by a pressure transmitter mounted at the side of the cask. The pressure transmitter is connected to an alarm panel located outside the ISFSI security fence and is checked daily.

If the monitoring system indicates a loss of pressure due to seal leakage, the cask would be returned to the Auxiliary Building and the seals repaired or replaced as necessary to return the cask to proper operation.

3A.5 Life of the Storage Facility

The NRC's license for the Prairie Island ISFSI terminates 20 years after issuance unless renewed. Since the Prairie Island ISFSI License will expire on October 31, 2013, we will request a renewal of the license prior to October 31, 2011 in accordance with NRC regulations. In order to renew the license, we must demonstrate that the facility can continue to operate safely.

Because of their passive nature, the storage casks will require little, if any, maintenance over the lifetime of the ISFSI. Typical maintenance tasks involve occasional replacement and recalibration of monitoring instrumentation and touchup of some casks with corrosion-inhibiting coatings. No special maintenance techniques are necessary.

The economic life of the ISFSI and storage system (the period over which the investment in the facility will be depreciated) will be based on a judgment about how long it will remain in service. The length of time of operation of the ISFSI depends on how long Prairie Island will operate and the availability of off-site storage or a permanent repository. At this time, since the expansion of the ISFSI is sized to store enough fuel to support operation for twenty years beyond Prairie Island's current license expiration date, it is anticipated that the economic life of the ISFSI will be until October 2034 when the renewed license for Unit 2 expires.

Physically, the facility can be operated indefinitely. The materials used in the storage system (casks and concrete pads), principally steel and reinforced concrete, are sturdy and long-lived. The system requires no active support systems to ensure performance other than simple pressure monitors that are readily replaceable. The supporting infrastructure (intrusion detection, cameras, lights, weed mitigation and access roadways) will be maintained as needed.

3A.6 ISFSI Design, Expansion, Cost and Schedule Information

The Prairie Island ISFSI has been designed and constructed, in accordance with the information provided in Section IV.A of the Application for a Certificate of Need dated April 29, 1991 (and revised June 10, 1991). The ISFSI is currently

constructed to store up to 48 TN-40 casks. The proposed changes would enable the Prairie Island ISFSI to store up to 64 TN-40 or TN-40HT casks.

In order to store the additional 16 casks, two new pads will need to be constructed. Construction of each new pad consists of pouring an 18 ft wide x 216 ft long x 3 ft thick slab. In addition, underground concrete ductbanks and associated electrical conduit will need to be installed from the Cask Monitoring Building to the new pads. The work will include excavation of the pad area, trenching of the ductbank path, pouring the concrete pad and ductbank, and replacing the structural fill. Site preparation will involve using earth moving equipment such as bull dozers, scrapers, backhoes and graders to excavate and level the pad and ductbank areas. Following the leveling of the area, reinforced steel, conduit and forms will be put in place and concrete will be poured forming the storage pads and ductbanks. Concrete trucks will deliver concrete to the site and pumping trucks will place it. The area around the pad and trench over the ductbank will be back-filled and returned to the 2% grade when complete.

Since the cask loading plans do not call for the utilization of these new storage pads until 2022 it is projected that the installation of the pads would not occur until 2020.

The estimated installed cost of the ISFSI in 2008 dollars is $145.7 million. The estimate includes the following component costs:

State Regulatory Processes	$2 million
Cask Licensing	$4.6 million
ISFSI Construction	$3 million
ISFSI Relicensing	$2.8 million
35 TN-40HT Casks	$143.3 million
Total	**$155.7 million**

3B Power Uprate Project Description

3B.1 History of Power Uprates

Several decades of reactor safety technology improvements, plant performance feedback, and improved fuel and core designs have shown that Prairie Island (and many similar reactors throughout the United States) can operate at higher output than allowed under the original NRC license and still remain well within NRC calculated safe operational levels. Therefore, many nuclear power plants throughout the United States have requested power increases above the original NRC approved thermal power level. The NRC's webpage address for power approval status is:

http://www.nrc.gov/reactors/operating/licensing/power-uprates/approved-applications.html .

As of April 2008, the NRC had completed 118 Power Uprate project reviews. This has resulted in producing approximately 5,263 additional MW for our nation's power supply grid. Appendix I contains a list of the power uprates approved by the NRC.

Under NRC terminology, a power uprate of more than seven percent (up to a maximum of 20 percent) over the Original Licensed Thermal Power ("OLTP"), and which requires significant balance-of-plant upgrades is called an "Extended Power Uprate" or "EPU". [11] As of April 2007, the NRC has approved extended power uprates for five pressurized water reactors. Xcel Energy, in conjunction with the designer of Prairie Island, Westinghouse, is evaluating the effects of an extended power uprate on the primary or reactor system at Prairie Island and is evaluating the effects of the uprate on the secondary system with a number of vendors. Based on the NRC's action for a similar reactor, the Ginna plant in New York, it is expected that the NRC evaluation will conclude that sufficient safety and design margins exist such that the rated core thermal power for each unit at Prairie Island can be increased from 1650 to 1805 megawatts thermal ("MWt") without any adverse impact on the health and safety of the public and without any significant impact on the environment. We intend on filing an amendment to Prairie Island's operating licenses to allow for an increase in the licensed core thermal power level to 1805 MWt with the NRC in 2010.

[11] The Prairie Island power uprate as proposed is technically an extended power uprate. It is being referred to generically as a power uprate within this Application for simplicity.

3B.2 Power Uprate Proposal

The power uprate at the Prairie Island plant will be achieved by : 1) increasing the amount of heat produced in the reactor, which will result in more steam being produced by the steam generators. Power uprates in a Pressurized Water Reactor ("PWR"), generally speaking, do not require significant modifications to the Reactor, Nuclear Steam Supply System, or Emergency Core Cooling Systems. Instead, these systems are reanalyzed to demonstrate that their functions are unaffected by operation at the new conditions, with adequate margin remaining. The increased power levels are achieved by loading more uranium into the reactor at the beginning of each fuel cycle. In order to transfer the additional heat energy out of the fuel, the fuel assemblies themselves will operate at slightly higher temperatures.

The increased reactor coolant temperature results in the need to perform several analyses to demonstrate continued compliance with the design criteria for safe operation. The analyses will demonstrate that adequate margin to regulatory limits are maintained at the increased power level. These analyses will be reviewed and approved by the NRC as part of the operating license amendment process.

A PWR consists of two separate loops of water to produce steam. The primary loop, also known as the Reactor Coolant System ("RCS"), carries high-pressure water, moved by two large reactor coolant pumps, from the reactor to the steam generators where the heat generated by fission in the nuclear fuel is transferred to a second loop of water. The high pressure in the RCS ensures that boiling does not occur in the primary system. The steam generators, which are essentially heat exchangers, transfer the heat through the walls of a series of tubes to heat the water in the secondary system, which operates at a lower pressure. The heat transferred to the secondary loop causes boiling to occur in the secondary side of the steam generators, and the steam produced is sent to the steam turbine, which converts the energy into electricity in the turbine generator. The main steam pressure in the secondary loop will be increased resulting in a corresponding increase in steam temperature.

The balance-of-plant systems that convert the steam produced in the steam generators to electricity will need significant modifications. These modifications will be completed on Unit 1 during the 2012 refueling outage and on Unit 2 during the 2015 refueling outage.

The current average annual heat rate for the Prairie Island units requires 10.46 mbtu/MWh on Unit 1 and 10.476 mbtu/MWh on Unit 2. The anticipated average

annual heat rate for both units following completion of power uprate is 9.936 mbtu/MWh (after steam generator replacement and power uprate).

3B.3 Necessary Plant Modifications

Increasing the thermal output of the reactors will require more uranium in the reactor core to maintain the same fuel cycle length, e.g. eighteen to twenty months. This will be accomplished by using a fuel assembly that has slightly larger diameter fuel pellets. These larger fuel rods will also have more surface area for heat transfer offsetting some of the higher operating temperatures. The new fuel design will be approved by the NRC prior to use in the Prairie Island reactors.

Very few modifications are required to the reactor and its support systems that produce steam. On the other hand, significant changes will be required to the systems that convert the steam produced in the steam generators to electricity. The modifications will be installed primarily during refueling outages. The major modifications are described below. Additional smaller scope modifications will be identified during the detailed engineering phase of the project.

In the secondary loop and electrical generation systems, several major equipment changes will be required, both to accommodate the additional steam and feedwater flows, and to handle the extra megawatt output. In making the required changes, features have been incorporated to optimize thermal cycle efficiency under the new steam conditions and therefore maximize gross megawatt output.

A. High Pressure Turbines

The high-pressure turbine for each unit will be upgraded. The existing high-pressure turbines are double-flow, partial arc admission, reaction bladed design, that have been in service since plant commissioning. One design under consideration is a full arc admission, single-flow, impulse bladed, balancing gland design. A single-flow turbine has 2 exhausts versus 4 in the existing turbine, so a portion of the exhaust piping below the turbine would be replaced to work with the new configuration. The turbine governor valves will be redesigned and the flow area through the valve throats increased to minimize the pressure drop imposed on the steam.

B. Main Generator Rewinds

At this time, both generator rewinds and retrofits are under consideration. A retrofit could include replacement of all of the stator conductors with water-cooled windings.

C. Generator Step-Up Transformers

The generator step-up transformers are reaching the end of their useful lives, and are underrated for the power uprate conditions. When they are replaced, we will add the necessary capacity for power uprate.

D. Moisture Separator Reheaters

The moisture separator reheaters ("MSRs") at Prairie Island function to improve the steam quality of the HP turbine exhaust and superheat the steam before it enters the low-pressure turbines. Replacing the MSRs with larger units with more flow area and heat transfer surface could reduce the pressure drop by 1/2. This would result in higher pressures to the inlet of the LP Turbines, and a corresponding increase in electrical generation.

E. Upgrade Isophase Bus Duct Cooling

The isophase bus conducts the electrical output of the main generator to the main transformer. Heat loads in the isophase bus duct will increase with the higher power levels that result from power uprate resulting in a need to increase the cooling capability of the isophase bus ducts.

3B.4 Impact on Plant Operations

In general, operation of Prairie Island will not change due to the power uprate. However, one of the changes will be an increase in the cooling needs of the circulating water system. This may result in more frequent operation of the cooling towers to supplement the Mississippi River cooling capacity over the course of a year. If extreme conditions warrant, the facility will reduce power to remain within the constraints of existing permits.

During each refueling outage under current power levels, a little more than a third of the 121 total fuel assemblies (typically 48), in a reactor are replaced with new ones. As a result of utilizing the larger diameter fuel rods described in Section 3B3 above, the number of fuel assemblies replaced each refueling outage is not expected to change under power uprate conditions. The projected number of fuel

assemblies to be discharged from Prairie Island reactors in Table 3-1 reflects operations under power uprate conditions.

3B.5 Impact on Spent Fuel Produced

During each refueling outage under current power levels, a little more than a third of the 121 total fuel assemblies (typically 48), in the reactor are replaced with new ones. As a result of utilizing the larger diameter fuel rods described in Section 3B.3 above, the number of fuel assemblies replaced each refueling outage is not expected to change under power uprate conditions. The projected number of fuel assemblies to be discharged from Prairie Island reactors in table 3-1 reflect operations under power uprate conditions.

3B.6 Project Cost, Life and Availability Information

3B.6.1 Capacity Cost

The estimated installed cost of the 164 MW of additional capacity at Prairie Island achieved by power uprate is $2,011/kW. Fuel costs in 2012 following completion of the power uprate are forecast to be 0.00598 dollars per kWh. The variable operating and maintenance costs in 2007 are 0.00040 dollars per kWh. The total costs in 2011 of a kWh hour from this capacity will be 0.03808 dollars per kWh. The estimated effect on rates system-wide and in Minnesota, assuming a test year beginning with the proposed in-service date will be .00103 dollars per kWh. The estimated nominal heat rate for Prairie Island plant following completion of the power uprate modifications in 2012 and 2015 will be 9.936 Mbtu/MWh.

3B.6.2 Service Life

The service life of the extra capacity will be until 2033 for Unit 1 and 2034 for Unit 2, assuming the necessary federal and state regulatory approvals are granted.

3B.6.3 Average Annual Availability

This capacity should be available 24 hours a day 7 days a week other than during refueling outages, which nominally will occur every 18 to 20 months for duration of approximately 1 month. Assuming a 3 percent forced outage rate annually this

translates into availability factor of 92.4 percent for this capacity. Table 3-2 below, provides the requirements for Minn. R. 7849.0250 in tabular format:

Table 3-2: Power Uprate Operational Information Summary		
Rule Reference	**Description**	**Prairie Island Power Uprate**
Capacity		164 MWe
Annual Capacity Factor		• 88.8% during years with refueling outage • 97% during years without refueling outage • Assumes a 3% forced outage rate
Typical Availability		Because nuclear power plants are dispatched and operated whenever they are available, the capacity factor and availability factors are the same.
7849.0250 A (1)	Nominal generating capability	164 MW
7849.0250 A (2)	Operating Cycle	30 day refueling outage every 2 years
Anticipated annual capacity factor		• 88.8% during years with refueling outage • 97% during years without refueling outage • Assumes a 3% forced outage rate
7849.0250 A (3)	Type of fuel used	Uranium
7849.0250 A (3)	Availability of fuel	Both the OECD and IAEA project uranium supplies are adequate to meet the needs of nuclear power plants worldwide, as well as new reactors anticipated in the next decade. The agencies base their conclusion on official projections from 43 uranium-producing countries, as well as independent studies by the agencies.
7849.0250 A (3)	Alternative fuels	None
7849.0250 A (4)	Anticipated heat rate (efficiency) (ISO Conditions)	10.425 mbtu/MWh
7849.0250 C (1)	Capacity Costs In $/kW	$2,011/kW
7849.0250 C (2)	Service Life	2014 to 2034
7849.0250 C (3)	Estimated Average Annual Availability	97%
7849.0250 C (4)	Fuel Costs ($/kWh)	$0.00598kWh
7849.0250 C (5)	Variable Operating And Maintenance Costs ($/kWh)	0.00040 $/kWh
7849.0250 C (6)	Total Cost ($/kWh)	$0.03808/kWh
7849.0250 C (7)	Estimated Effect On Rates System-Wide Assuming Test Year Beginning With Proposed In-Service Date	$0.00103/kWh
7849.0250 C (8)	Efficiency Expressed In Heat Rate	9.94mmBtu /MWh

4 Alternatives to Continued Operation of Prairie Island

4.1 Section Summary

This Section of our Application describes the evaluation of the generation alternatives to the continued operation of Prairie Island. The authorization of additional spent fuel storage is subject to the approval of a Certificate of Need pursuant to Minn. Stat. § 216B.243. Minn. Stat. § 116C.83, subd. 2 provides that in any proceeding seeking the authorization of additional spent fuel storage, the Commission may make a decision that could result in the shutdown of a nuclear generating facility.

For many years, our Resource Plans have included an analysis of the role our nuclear power plants play in meeting our customers' demand for electrical power. Prairie Island represents approximately 18 percent of the production capacity used to meet electrical demand and provides nearly 10 percent of the electricity our customers use. With uncertainty about the fate of spent fuel being stored at Prairie Island and the pending end of the original 40-year licenses to operate the plant, our 2007 Resource Plan again analyzed the economic and environmental impacts of continuing to operate Prairie Island versus replacing it.

Our evaluation of the alternatives in this Application is consistent with that of the recent Resource Plan: Prairie Island should continue to be part of generation fleet that supplies power to Minnesota and surrounding states. No replacement alternative can provide the financial and environmental benefits that are achieved by the continued operation of Prairie Island. Elimination of Prairie Island will lead to significant increases in carbon and other emissions at a significant increase in cost to our customers.

4.2 Methodology and Tools for Alternative Evaluation

The evaluation was performed using the same methodology and analysis tools used in the Certificates of Need for the Monticello ISFSI project; the Monticello Power Uprate project, and the 2007 Resource Plan. The first half of this Section provides an overview of the evaluation methodology, criteria, and software tool ("Strategist") used to evaluate the generation alternatives.

We also describe the specific evaluation methodology and assumptions used in the analysis. The second half provides an evaluation of the generation options available to replace the current generation capacity of Prairie Island if additional dry cask storage were not approved.

The evaluation of alternatives followed separate processes for the replacement of Prairie Island if the ISFSI expansion is denied versus the addition of 164 MW of capacity from the extended power uprate project. Since we have previously evaluated options for replacing our nuclear power plants,[12] we relied on those analyses to help determine viable alternatives to the continued operation of Prairie Island.

Xcel Energy uses Strategist resource planning software to evaluate large and long-term capacity alternatives. We have used the Strategist model to perform similar resource planning analyses in many other dockets, including: 2007 Resource Plan (Docket E002/RP-07-1752); 2004 Resource Plan (Docket No. E002/RP-04-1752); Certificate of Need to Establish an Independent Spent Fuel Storage Installation at the Prairie Island Generating Plant (Docket E-002/CN-05-123); Emissions Reduction Proposal (Docket No. E002/M-02-633); 2001 All-Source Bid process (Docket No. E002/M-01-1618); 2002 Minnesota Resource Plan filing (Docket No. E002/RP-02-2065); and Blue Lake Certificate of Need filing (Docket No. E002/CN-04-76).

Strategist:

- Develops the optimized selection of resources to meet need, given the input assumptions.
- Calculates the present value of revenue requirements ("PVRR") to measure the economic impacts of various planning scenarios. (The reported values in this plan are in 2008 dollars ["2008$"].)
- Calculates environmental impacts of the plan, using externality values and forecasted emission permit prices.

Strategist is useful as a planning tool in two ways. First, given a set of assumptions about the forecasted demand for electricity and the resources available to meet that demand, Strategist will optimize the operation of existing

[12] 2004 Resource Plan (Docket No. E002/RP-04-1752), 2007 Resource Plan (Docket E002/RP-07-1752), and Nuclear Report filed July 2, 2007 (Docket No. E002/RP-04-1752) and required by Minn. Stat. § 216C.051 Subd. 3 (d) and Minn. Stat. § 116C.772.

resources and add new resources to develop the expansion plan with the lowest PVRR.

Strategist is also used as a tool to determine the PVRRs of alternative cases. In this case, Strategist is "forced" to accept a particular resource or an entire expansion plan, and the resulting PVRRs can be compared to analyze the effects of different resource choices.

The Strategist model also has some limitations. It is not a chronological dispatch model; that is, it does not simulate the operation of the system from hour to hour. The model is not able to simulate the ramp rate of units and other order-dependent variables that may affect the operation of the system. Instead, Strategist simulates system dispatch for each hour independently of what occurs before or after that hour.

4.2.1 Modeling Inputs

In order to run the production simulations, numerous input assumptions are provided to the model. In addition, some issues do not lend themselves well to computer simulation, in which case adjustments to the Strategist output are made after-the-fact. Below we describe some of the key variables we used to analyze Prairie Island's future role in our resource mix.

4.2.1.1 Base Case Assumptions

Since our 2007 Resource Plan was filed December 14, 2007, all Strategist inputs used in the analyses in this Application are the same as the inputs used in the Resource Plan. Thus, the forecast, legislative compliance with the RES and DSM legislation, individual plant information, externalities, fuel forecasts, etc. are all the same for this analysis as submitted in the 2007 Resource Plan.

4.2.1.2 Load Forecast

This Application uses the same forecast that we filed in our 2007 Resource Plan on December 14, 2007 and was used in our February, 14 2008 Power Uprate Certificate of Need for the Monticello Nuclear Generating Plant. The forecast was developed in November of 2007 and reflects the most recent data available. As with previous resource plan modeling, the median or 50 percent

probability forecast for energy, and the 90 percent probability for peak demand were used. The 90 percent probability forecast of peak demand was used to ensure that we have sufficient generation capacity to meet energy demand under most plausible circumstances.[13]

4.2.1.3 Existing Generation Fleet

We model our entire generation fleet in Strategist. Inputs for each unit include: maximum dependable capacity, firm capacity (URGE), heat rate profiles, emission profiles, maintenance schedules, forced outage rates, fuel cost, variable O&M, and fixed O&M.

We recently completed a comprehensive review of Strategist inputs in preparation for the 2007 Resource Plan. The inputs changed included heat rate, emission rates, O&M costs, capacity ratings, and outage schedules. The changes ensure that Strategist is producing the most accurate forecast of system performance possible.

4.2.1.4 Renewables

Wind resources are modeled using representative hourly generation profiles. The nameplate capacity is multiplied by the hourly profile to estimate the unit's generation. This enables Strategist to simulate the variability of wind and to predict the dispatch of thermal units needed to complement these resources.

The Strategist inputs were updated to reflect compliance with Minnesota's new Renewable Energy Standard. Instead of modeling the necessary requirements coming on-line only in the year they are needed, we assumed the addition of 200 MW of wind generation each year. We also reviewed and updated our cost assumptions for future wind energy.

Biomass plants are modeled much like other thermal plants and are dispatched on economic merit. Hydro power is modeled either as run-of-river where energy is provided at a constant rate, or as a dispatchable resource for hydro resources with pooling capabilities

[13] The forecast has been reduced by approximately 1.1 percent to reflect compliance with the DSM goals set by the 2007 Minnesota Legislature.

4.2.1.5 Emissions

Externalities are modeled in accordance with the Commission's Order Establishing Environmental Cost Values in Docket No E-999/CI-93-583 for PM10, CO, and Pb. However, we replaced the Commission's externality value for NOx with a forecast of permit allocations and prices under the Clean Air Interstate Rule (CAIR). CAIR permit allocations and prices are also modeled for SOx and Mercury. The Commission's externality value for CO_2 was replaced with a higher value to reflect our expectations regarding the costs of future carbon regulations. A listing of the emissions assumptions modeled can be found in Table 4-1.

Figure 4.1 Emission Assumptions Modeled

Effluent	
SO_2	$776.54/ton based on the current cost of permits under title IV of the Clean Air Act. This value increases significantly in 2010 with the implementation of the Clean Air Interstate Rule (CAIR).
NOx	$591.54/ton based on the current cost of permits under title IV of the Clean Air Act. This value increases significantly in 2009 with the implementation of the Clean Air Interstate Rule (CAIR).
Mercury	$18,432/ton starting in 2010 with the implementation of the Clean Air Mercury Rule (CAMR).
CO_2	$20/ton starting in 2010. This value is meant to be an estimate of the costs from future carbon regulation.
PM10	$7,094-$923/ton depending on location, based on externality values established by the Minnesota Public Utilities Commission.
CO	$2.17-$0.40/ton depending on location, based on externality values established by the Minnesota Public Utilities Commission.
Pb	$2.17-$0.40/ton depending on location, based on externality values established by the Minnesota Public Utilities Commission.

4.3 Alternatives Evaluation for the Continued Operation of Prairie Island

To evaluate the futures with and without Prairie Island, we first reviewed the previous "life extension" analyses performed for Prairie Island and Monticello contained in our 2004 Resource Plan (Docket E002/RP-04-1752), the Monticello Spent Nuclear Fuel CON (Docket E002/CN 05-0123) and our 2007 Resource Plan (Docket E002/RP-07-1572). This review coupled with the carbon reduction goals established by the 2007 legislature and the need for a replacement generation resource(s) with similar operating characteristics (capacity, energy, reliability and availability) of a nuclear base load plant provided few generation resource alternatives to consider.

Based on that review, we compared continued operation of Prairie Island to a super critical pulverized coal (SCPC) plant with 50% carbon sequestration. In addition, we allowed Strategist to pick the least-cost replacement for Prairie Island ("unconstrained case") based on the generic alternatives available.

We also modeled the various alternatives to the continued operation of Prairie Island under different assumptions regarding fuel and environmental costs (Sensitivities) as discussed below. The resulting total system costs and emission levels were then compared to evaluate the alternatives for cost effectiveness and environmental impact.

4.4 Modeling Assumptions for Additional Dry Cask Storage

In Appendix H of our Application, we discuss the ongoing processes for identifying emerging aging issues, also known as life cycle management, that have been integral to the operation of Prairie Island over the years. In Section 3 we discuss the NRC license renewal process. These discussions provide context for the discussion in this section regarding the capital investments used in the analyses for Prairie Island.

4.4.1 Capital Investments

As part of the operation and management of Prairie Island, we routinely invest and upgrade systems so that the plant maintains safe and highly reliable operations. We invest an average of about $20 million dollars annually ($10 million per unit) in the Prairie Island plant to keep systems operating well. In

our analysis, we have assumed these levels of capital investment will continue to be made in the plant.

In addition to the capital investments routinely made on an annual basis, larger capital investments are sometimes required. These larger capital investments are necessary because of new or evolving regulatory requirements, operating experience at our plants or elsewhere in the industry, parts obsolescence or new technologies becoming available. These types of investments have been considered as part of the process leading to a decision to pursue license renewal. Individuals responsible for system operation at the plant utilize the types of inputs described above, identify and develop recommended large capital improvements that are reviewed, approved and prioritized to ensure continued safe and reliable operations.

The large capital investments include the Unit 2 steam generators, additional spent fuel storage costs, and relicensing costs. No major structural changes to the reactor or the storage pool will be needed for the continued operation of the plant. In total, inputs for large capital investments over and above the $20 million invested each year for life cycle management will amount to approximately $600 million. While not a definitive list as items may be added or removed, it is considered representative of the order of magnitude that we estimate will need to be invested over the 20 years of additional operation. Due to the costs associated with three larger capital projects mentioned above, a brief description of each is provided below.

4.4.1.1 Steam Generator Costs

Both Prairie Island units are two-loop pressure water reactors and each unit includes two steam generators. A high-pressure water cycle transfers heat generated in the reactor core to steam generators, where steam is produced to drive the turbine generator. Steam generators are large vessels that separate high-pressure water circulating through the reactor from the steam cycle used to power turbine generators at the plant. In the steam generator vessels, heat is transferred from the primary reactor water cycle to the secondary steam cycle by passing water through and around 3,388 steel alloy tubes.

Through an aggressive program of inspection and maintenance, Prairie Island has been able to operate its steam generators longer than other plants of similar vintage. However, projections of steam generator tube degradation indicate that while plant safety can be maintained without compromise, the plant could

become uneconomic as early as 2009 due to declining performance of the steam generators. In previous work we determined that replacing steam generators in Unit 1 was cost justified even if the plant operated only to 2013. As a result, in 2004 we replaced Unit 1's two steam generators.

Unit 2 steam generators have experienced less overall degradation than the Unit 1 steam generators. However, it will be necessary to replace the Unit 2 steam generators in order to keep the plant operating economically beyond the current license period. Our Strategist analysis includes steam generator replacement for Unit 2 in those scenarios in which Prairie Island operates beyond 2014. Steam generator replacement is estimated to cost approximately $259 million (current dollars).

4.4.1.2 Dry Cask Storage Costs

Capital investments have been included in the model for increasing spent fuel storage capacity at Prairie Island to accommodate the entire 20 year period of extended operations resulting from the renewal of the operating licenses.

We assumed the continued use of the TN-40 style dry cask storage system currently in place at the plant, but intend on using an enhanced version of the TN-40. The enhanced version called the TN-40HT is described in detail in Section 3. We continue to pursue the licensing changes needed to qualify the TN-40 dry casks for transportation. In August 2007, Transnuclear's application to the NRC to license the TN-40 casks for transport was accepted. The NRC has already approved a similarly designed cask, the TN-68, for transport. The TN-68 is a "sister" cask utilized for boiling water reactor spent fuel while the TN-40 is for a pressurized water reactor spent fuel. We estimate an additional 35 TN-40 casks will be needed to support the 20 years of extended operation. The combined cost of the five casks to operate until the end of the current license and the casks needed to support 20 years of additional operation is approximately $190 million, with the portion related to the additional casks included in the relicensing scenarios only and the portion related to the five casks included in all scenarios.

4.4.1.3 Relicensing Costs

We filed our application for the 20-year operating license extension for Prairie with the NRC on April 15, 2008. The cost to perform the analyses and

process the application to renew the licenses to operate Prairie Island for an additional 20 years will be approximately $20 million.

4.5 Out of Model Adjustments

If the operating life of the Prairie Island plant is not extended, there are some significant shutdown costs that were not taken into account by the Strategist model. These costs could range in the aggregate from $335 million to $390 million, or more. They relate to three specific shutdown activities: (1) the costs associated with retaining key personnel once the announcement is made that the plant will shutdown ($80 million to $135 million, present value); (2) the management of spent nuclear fuel and decommissioning ($141 million, present value); and (3) the changes in the transmission system required to maintain regional transmission stability and serve replacement power resources (approximately $115 million). The rationale for these costs was discussed in detail in our 2002, 2004 and 2007 Resource Plans. We are not repeating that discussion in this Application since our evaluation indicates that continued operation is the most cost-effective option even before these shutdown costs are considered.

In addition to these costs, replacement generation would require significant new transmission investment. These costs would be in the range of $30 million if all replacement generation were located near Prairie Island, or could range from $350 to $900 million if located elsewhere.

4.6 Alternative Screening

The authorization of additional spent fuel storage (Minn. Stat. § 116.83, subd. 2) is subject to the approval of a Certificate of Need, pursuant to Minn. Stat. § 216B.243. Minn. Stat. § 216B.243 requires that the applicant show the demand for electricity cannot be met more cost-effectively through conservation or from renewable resources, or what the consequences are of no facility.

4.6.1 Demand Side Management ("DSM")

DSM includes both our Conservation and Load Management Programs. Our DSM efforts and accomplishments are discussed in detail in Appendix C. The Next Generation Energy Act of 2007 approximately doubled the DSM goals approved in our 2004 Resource Plan. The Act sets a mandatory minimum

savings goal from Conservation Improvement Programs, or "CIP", programs at 1.0 percent of retail sales and an overall goal of 1.5 percent. We are committed to achieving a 1.1 percent energy reduction as our CIP/DSM goal. However, meeting this goal will be very challenging. We will likely launch new conservation programs as well as expand existing programs to meet the 1.1 percent target. However, even after assuming we will reach the 1.1 reduction target, our overall system is growing.[14] Such aggressive expansion of DSM programs pushes the limits of achievable potential in our service territory and creates significant uncertainty regarding the size and timing of actual savings. The Company concludes that an additional 1,100 MW of DSM savings by 2014 to replace Prairie Island is not feasible.

4.6.2 Renewables

Xcel Energy and the State of Minnesota have a long history of encouraging and supporting the development of renewable energy. We began contracting for wind in conjunction with our 1991 Resource Plan. In 1991, mandates for wind requirements were set for the Company. In 2001, the Legislature implemented a Renewable Energy Objective ("REO") for all Minnesota public utilities, requiring a good-faith effort to supply at least one percent of retail energy sales from eligible renewable resources by 2005, and increasing that amount by one percent per year until the utility supplied 10 percent of retail energy sales using renewable energy by 2015. The Minnesota Legislature expanded the mandates for the Company in 2003 and last year, the 2007 Minnesota Legislature adopted the most aggressive Renewable Energy Standard ("RES") in the nation. For Xcel Energy, this standard requires that 30 percent of retail sales must be supplied by qualifying renewable sources by 2020. Of this 30 percent, wind resources must supply 25 percent of retail sales. Other qualifying renewable resources can supply the remaining five percent. In addition to the 2020 requirement, Xcel Energy is also required to meet the following interim renewable goals:

2010 – 15%

2012 – 18%

2016 – 25%

[14] Appendix B contains a more detailed explanation of how the DSM goals passed by the 2007 Legislature were incorporated into our forecast and the growth after accounting for DSM.

Since we already obtain nearly five percent of our retail sales from biomass and hydroelectric energy either on our system or under contract, our compliance with the RES will stem from new wind resources unless any of these arrangements with other resources change; for example, if we were unable to renew fuel contracts at our refuse derived fuel facilities.[15] Compliance with the new renewable energy standard will be challenging as is, and implementing a significant amount of more wind could pose operational issues on the system. Therefore, we do not consider replacing the energy and capacity from Prairie Island with additional renewable energy as a viable option.

4.6.3 No Facility

Our Application requests approval for additional dry cask storage necessary to operate Prairie Island until 2033 - 2034. The need for on-site dry cask storage is not eliminated if the plant does not operate beyond 2013 - 2014. If a Certificate of Need were not granted, Prairie Island would shut down in 2013 and 2014. In order to decommission the plant, spent fuel would have to be removed from the reactor and spent fuel pool and would require an additional 39 casks to fully decommission the plant. As part of the process of developing a decommissioning plan, we would apply to the Commission for a Certificate of Need for additional on-site dry cask storage, and additional generation resource(s) capable of serving similar amounts of energy and capacity with similar reliability and availability would need to be constructed to replace Prairie Island. We conclude that no facility is not a reasonable option.

4.7 Generation Alternatives

The loss of Prairie Island would require approximately 1,100 MW of replacement capacity and 8,500 GWh of replacement energy. Based upon a review of the previous analyses that have been performed in past Resource Plans and Certificates of Need, the generation alternatives modeled for this Application were a super critical pulverized coal (SCPC) plant with partial carbon sequestration and natural gas fired combined cycle (CC) plants selected by the strategist in the unconstrained scenario.

[15] The RES statute provides that we can meet interim milestones with any qualified renewable resources; however, by 2020, 25 percent of our retail energy sales must be supplied by wind.

4.7.1 Prairie Island Life Extension and Replacement Alternatives

4.7.1.1 Base Case – Continued Operation of Prairie Island

To examine the costs and benefits of extending Prairie Island's operating life by granting the additional storage casks, we compared three scenarios using Strategist. The first scenario modeled was the continued operation of Prairie Island from 2013-2014 to 2033-2034.[16] The plant was modeled to continue operating at 1,095 MW (maximum net generating capacity) with a total of $1.2 billion of additional capital investments during its lifetime.

4.7.1.2 Super Critical Pulverized Coal ("SCPC") Replacement

The second scenario examined replacing Prairie Island with a SCPC with 50 percent carbon sequestration. There is great uncertainty regarding the costs of carbon sequestration, and it is unlikely a unit could be commissioned by 2014 to replace Prairie Island. However, a SCPC was modeled at 1,260 MW[17] (maximum net generating capacity) with a total cost of $6 billion. The cost and performance inputs for the SCPC replacement option were based on an estimate for a conventional coal unit developed for Xcel Energy's 2007 Resource Plan. The inputs for the conventional unit were modified for the expected costs and performance impacts of 50 percent carbon sequestration. Capital costs were increased 17 percent, capacity was decreased by 16 percent, heat rate was increased by 20 percent, annual fixed costs were increased by 9 percent, and variable O&M were increased by 64 percent.

4.7.1.3 "Unconstrained" Replacement

The third scenario allowed Strategist to pick the least-cost replacement for Prairie Island. The model chose two natural gas fired combined cycle ("CC") units with a total capacity of 1,254 MW (maximum net generating capacity) and total cost of $956 million. These units are two-on-one configurations with supplemental duct firing. The expected generation from the CCs is significantly less than that from Prairie Island. In Strategist's dispatch

[16] This scenario does not include the 164 MW proposed extended power uprate project.

[17] Strategist accounted for the fact that the additional 160 MW the CC & SCPC options would provide over the 1100 MW Prairie Island by eliminating a 160 MW CT in the expansion plan.

simulations, the balance of energy comes from other resources on the Xcel Energy system.

4.8 Strategist Analysis & Results

Each scenario was run in Strategist using the Reference Case from the 2007 Resource Plan.[18] The model calculated optimal expansion plans and total system costs for 2008 through 2047. The net present value of revenue requirements ("PVRR") was lowest for the continued Prairie Island operation scenario. The capital costs for the SCPC option were too high for it to be a cost-effective alternative. Conversely, the capital costs for the combined cycle option were moderate, but the replacement energy costs are higher compared to base load energy. See Table 4-1 below.

Table 4-1 PVRR Summary for Life Extension

PVRR Summary	PVRR	Delta
Prairie Island Life Extension	61,875	
Super Critical Pulverized Coal	64,068	2,194
Natural Gas Combined Cycle	62,938	1,063

Table 4-4 compares the total costs of the three alternatives. The total costs for the SCPC and CC options include 'other system costs (benefits)'. This cost category aggregates all the other PVRR cost differentials that are not directly attributed to SCPC and CC plant costs. Most of these costs are additional generation costs from other Xcel Energy plants that help replace the energy from Prairie Island. In the case of the SCPC, there are some years that it outperforms Prairie Island and creates an additional system benefit by displacing gas-fired generation.

Indicating that the Prairie Island life extension has the lowest PVRR and lowest levelized cost comparison implies that this alternative has the smallest possible impact on rates. Table 4-2 also summarizes the expected rate impacts of the three alternatives.

[18] The Reference Case uses our baseline assumptions, including the wind that will be needed to meet the RES. It does not include upgrades at the Sherco and Nuclear Plants or the extension of the Manitoba Hydro Contract. The Reference Case, however, does assume that Prairie Island is extended through 2033 and 2034.

Table 4-2 Total Alternative Cost Comparison ($ in 1000's)

	2014-2034
Total Plant Costs + Other System Costs	Levelized Costs ($1000)
Prairie Island Life Extension	$655,972
Natural Gas Combined Cycle	$834,526
SCPC With Partial CO2 Sequestration	$971,421
Average System Energy	57,100GWh
Prairie Island Life Extension	$11.49/MWh
Natural Gas Combined Cycle	$14.62/MWh
SCPC With Patrial CO2 Sequestration	17.01262697

The continued operation of Prairie Island will also have significant emissions benefits. Table 4-3 summarizes total annual system emissions for the continued operation of Prairie Island scenario and the emission increases for the other two alternatives.

Table 4-3 Emissions Comparison of the Alternatives

	Continued Operation of Prairie Island	Combined Cycle Alternative	SCPC With Partial CO_2 Sequestration
	Total System Emissions (tons)	Additional Emissions	
SOx	484,846	37,183	114,763
NOx	407,059	29,192	78,690
CO_2	528,137,870	87,642,730	106,890,570
CO	86,275	11,096	151,285
PM10	58,942	6,914	18,693
VOC	11,590	1,288	3,546

4.9 Sensitivity Analysis

In order to determine how changes in our assumptions impact the costs or characteristics of different resources, we examine our alternatives under a number of scenarios. If a plan or resource is extremely sensitive to changes in assumptions, it is not a robust course of action for the Company to pursue. Instead, we may propose an alternative that is less sensitive to assumption changes, but slightly more costly. For this Application, we tested the following scenarios.

- Load – The base forecast (unadjusted for DSM) has an average energy growth rate of 1.14 percent. The energy growth rate was adjusted down to average 1 percent and was also adjusted up to average 1.3 percent.

- Fuel Cost – The cost of natural gas, coal, and nuclear fuel were all independently adjusted up and down by 20 percent.

- Externalities – The Commission's low and high externality values were added to test the societal impacts of each alternative. However in place of the Commission's values for NOx the forecasted CAIR permit price was used and the Company's baseline CO_2 hedge value of $20/ton was used in place of the Commission's CO_2 value.

- CO_2 Values – The CO_2 hedge values were varied down to $9/ton and up to $40/ton.

- MISO – Due to the unpredictability of future market conditions, Xcel Energy models itself as a stand-alone system without additional purchases and sales from the MISO day two market. In our sensitivity analysis Strategist's Network Economy Interchange (NEI) submodule was activated to simulate how the system might interact with the rest of MISO. However, this sensitivity requires highly speculative assumptions about supply and demand conditions in the rest of the market. The Company recommends that these results should be viewed as an estimate of one possible outcome, but not a precise prediction of what will occur in the future.

- Capital Cost Escalation – The base assumption in Strategist is that the cost of capital projects will increase at 1.88 percent. Three percent and 5 percent cost escalation scenarios were also run to evaluate expansion plan sensitivity to escalation assumptions.

Table 4-4 presents the results of the sensitivities analysis. The leftmost column lists the PVRR result for the Prairie Island uprate project. The remaining columns list the differences from the Prairie Island project for each of the selected alternatives.

Table 4-4 PVRR Sensitivities
($ In Millions)

	Prairie Island Life Extension	Prairie Island Shut Down, Replace with Combined Cycle	Prairie Island Shut Down, Replace with SCPC with Partial CO_2 Sequestration
	PVRR	PVRR Differences From the Prairie Island Life Extension Scenario	
Base Case	$61,875	$1,063	$2,194
Low Load	$60,635	$1,008	$2,217
High Load	$63,405	$1,111	$2,175
Coal+20 percent	$62,804	$1,103	$2,288
Gas+20 percent	$64,612	$1,659	$1,725
Nuclear+20 percent	$62,215	$912	$2,042
Coal-20 percent	$60,932	$1,017	$2,081
Gas-20 percent	$59,929	$432	$2,419
Nuclear-20 percent	$61,604	$1,208	$2,339
Low Externalities	$61,016	$1,072	$2,201
High Externalities	$62,080	$1,076	$2,204
CO_2 $9/ton	$57,382	$610	$1,611
CO_2 $40/ton	$70,043	$1,892	$3,060
MISO On	$61,726	$924	$2,265
Capital Cost Escl 3 percent	$63,305	$1,002	$2,291
Capital Cost Escl 5 percent	$66,637	$840	$2,475

Under all sensitivity tests the continued operation of Prairie Island scenario is the most costs effective option. The combined cycle scenario performed best in the low gas, \$9/ton CO_2, increase capital cost escalation, and high nuclear fuel scenarios; while the coal alternative had its smallest PVRR differential in the high gas, low coal, and \$9/ton CO_2 scenarios. The reason the coal option did well under the high gas scenario is that the continued operation of Prairie Island has more replacement gas energy after 2033-2034 when the plant retires. The coal scenario assumed that SCPC units continue operation through the end of the study period in 2047, displacing large amounts of gas-fired generation from 2033 through 2047. However, there is ample time to consider replacements other than natural gas for Prairie Island in 2034. One possible alternative was a new nuclear unit, but because current Minnesota legislation prohibits new nuclear units, this option was not allowed to be selected by Strategist.

5 Dry Cask Storage Alternatives for Prairie Island

5.1 Section Summary

In this section of our application, we describe our evaluation of the storage alternatives to the proposed additional dry cask storage.[19] Minn. R. 7855.0120 requires that a Certificate of Need must be granted to an applicant upon determining that four principal criteria are met. The second principle criteria (Minn. R. 7855.0120(B)) states that:

> *"a more reasonable and prudent alternative to the proposed facility has not been demonstrated by a preponderance of the evidence on the record by parties or persons other than the applicant,…."*

Our analysis of the alternatives indicates that the proposed additional dry cask storage at Prairie Island is the most reasonable storage alternative.

This section discusses the following alternatives and findings:

- **Alternatives to on-site storage.** Our review found no, away-from-reactor, storage alternatives that would eliminate the need for additional on-site storage.
- **Alternatives to increase dry cask storage pool capacity.** The storage capacity of the existing pool can be expanded by a small amount, but not enough to support 20 years of extended operations.
- **Alternative dry cask system technologies**. The four available cask systems licensed for pressurized water reactor spent fuel storage are described. The TN-40HT system was selected based on economic evaluations and experience and familiarity with the TN-40 technology at Prairie Island.
- **Alternatives of a different size.** The proposal for 35 additional casks is intended to support the 20-year license renewal period. Due to the uncertainty surrounding when off-site storage alternatives might become available, the only way to ensure that Prairie Island is available on a reliable basis to facilitate long-term planning is to expand the storage capacity to accommodate the number of dry-storage casks necessary for the full 20

[19] This section provides the information regarding alternatives required by Minn. R. 7855.0610.

twenty years. The proposed addition of 35 casks will fit within the existing ISFSI.

- **Alternative sites.** A study to identify locations at Prairie Island suitable for additional cask storage was performed as part of the Application for a Certificate of Need dated April 29, 1991 (and revised June 10, 1991). The results of that study and the 1991 Certificate of Need process selected the location of the existing dry cask storage facility. Since there is sufficient room within the footprint of the existing dry cask storage area to accommodate the additional storage, the construction of additional dry cask storage at an alternative site was not deemed a preferred alternative.

- **No action alternative.** If a Certificate of Need is not granted, Prairie Island cannot operate beyond 2014 and would be forced to shut down. To complete the decommissioning process, spent fuel would have to be removed from the reactor and pool, which would also require additional on-site dry cask storage. Denying a Certificate of Need for additional dry cask storage that would allow Prairie Island to continue operating does not obviate the need for additional on-site storage, but only changes the purpose of dry cask storage from continued operations support to decommissioning support. The generation alternatives precipitated by the no action alternative are discussed in Section 4.

5.2 Alternatives to On-Site Storage

This section of our application examines four away-from-reactor storage alternatives for spent nuclear fuel: 1) reprocessing of spent nuclear fuel, 2) contracting for additional spent fuel storage capacity at an existing spent fuel storage facility, 3) developing an interim spent fuel storage facility in Utah, and 4) availability of a federally sponsored repository for spent fuel at Yucca Mountain. We conclude that none of the four represent a viable alternative to additional spent fuel storage space at Prairie Island.

5.2.1 Reprocessing Spent Nuclear Fuel

Reprocessing is a method of recovering unused uranium and plutonium from used nuclear fuel and recycling it for use in new reactor fuel. Reprocessing does not result in elimination of all nuclear wastes and radioactivity. However, the volume of high-level waste to be stored is reduced.

When electric power companies first considered using nuclear energy to generate electricity, it was assumed that when the nuclear fuel was used up or "spent", it would be recycled so that useful fuel could be extracted and used again. Approximately 96% of the spent fuel is uranium that could be reprocessed into usable fuel to generate electricity. It is this assumption that led to sizing spent fuel pools to provide the limited space necessary to cool spent fuel for a few years before transporting for reprocessing.

In 1977, President Carter, concerned about the possibility of nuclear proliferation, banned commercial reprocessing for private companies. As a result, the two private reprocessing facilities, then under final construction, were never made operational. President Reagan later lifted the ban, but because of economics of reprocessing compared to fabrication of new fuel and the political uncertainty surrounding reprocessing, no private companies have invested in constructing and operating reprocessing facilities in United States.

Reprocessing is not a viable alternative to establishing on-site dry cask storage at Prairie Island.

5.2.2 Existing off-site storage facilities

The only facility currently storing spent fuel on a contract basis from commercial nuclear power reactors is the General Electric Morris facility in Morris, Illinois. There are no spent fuel assemblies from Prairie Island currently being stored at that facility. The General Electric Morris facility is no longer accepting spent fuel from commercial nuclear power plants and is not a viable alternative to increasing the dry cask storage at Prairie Island.

5.2.3 Private Fuel Storage Initiative

We are pursuing temporary, away-from-reactor storage in Utah as a member of Private Fuel Storage, LLC ("PFS"). PFS is a consortium of eight utilities, including Xcel Energy, which is working to build a spent fuel storage facility on the west central Utah reservation of the Skull Valley Band of Goshute Indians. PFS and the Skull Valley Band of Goshute Indians entered into an agreement in December 1996 that allows for temporary storage of spent fuel from commercial nuclear power plants.

The license application for PFS was submitted to the NRC in June 1997. The NRC staff issued their final Safety Evaluation Report in December 2001. The

NRC issued their Final Environmental Impact Statement in January 2002. Both reports declared that the project design and supporting analyses met the federal regulatory requirements for Independent Spent Fuel Storage Installations.

The NRC's licensing process provides for the opportunity for public hearings before an Atomic Safety and Licensing Board (ASLB) appointed by the NRC. In April 1998 public hearings were granted and 25 contentions or issues brought by intervenors were admitted. The State of Utah and others were admitted as intervenors in the proceeding. The initial hearing was held in June 2000, with additional hearings held from April through July 2003, to consider the issues raised.

By the spring of 2003 all but one licensing contention were judged in PFS's favor. In March 2003, the ASLB ruled that PFS had to conduct additional analyses to consider the consequences of an aircraft crash on site structures such as the storage pads and canisters, and the canister transfer building. These analyses were filed in July 2003. Hearings on this issue were completed in September 2004. The Nuclear Regulatory Commission approved the license for PFS on September 9, 2005.

In September 2006 the U.S. Department of the Interior ("DOI") disapproved the PFS-Goshute lease and the use of public lands for an Intermodal Transfer Facility, which was to be used for a rail spur from the mainline to the storage facility. On July 17, 2007, PFS and the Skull Valley Band of Goshute Indians filed a complaint, in U.S. District Court challenging the September 2006 decision. PFS and the Skull Valley Band asked the Court to vacate the DOI decisions and require DOI to reconsider both issues on a strict timetable, this time adhering to the Department's own regulations as well as other federal laws and policies.

Even if PFS and the Skull Valley Band are successful in their judicial challenge to reverse the DOI decision, the project faces further obstacles. The State of Utah remains opposed to the project. Ultimately the viability of PFS will depend not only on the outcome of the licensing process, legislative activity, and litigation, but also on the interest and commitment to use the facility by utilities with spent fuel. Additional storage needs to be available in 2012 to support ongoing operation at Prairie Island. Even though PFS has a federal license in hand, we cannot be assured PFS will be in service to meet our timetable. Due to the considerable uncertainty surrounding the project, PFS is not an alternative to additional spent fuel storage at Prairie Island.

If PFS were to become available, it may represent an opportunity to reduce the overall number of storage casks used to keep Prairie Island operating beyond 2014 or the length of time that a dry cask storage facility will be needed on-site.

5.2.4 Yucca Mountain

The United States Department of Energy ("DOE") began studying Yucca Mountain, Nevada in 1978 to determine whether it would be suitable for the nation's first long-term geologic repository for spent nuclear fuel and high-level radioactive waste. Such fuel and waste are currently stored at 131 sites around the nation.

On July 9, 2002, after approximately $7 billion dollars in investigations at the site, numerous technical reports, and an Environmental Impact Statement, the U.S. Senate passed the required legislation overriding Nevada's objections to the site and approving the submittal of license applications to the NRC for a repository at Yucca Mountain and on July 23, 2002, President Bush signed House Joint Resolution 87 into law.

The DOE is currently preparing an application to obtain the NRC license to proceed with construction of the Yucca Mountain repository. The DOE intends to submit the license application to the NRC in June 2008 and the NRC will review the application for completeness. We anticipate the proceeding will commence later this year. The DOE has indicated that the repository will not be available prior to 2017, but has not provided an updated assessment of when it might be available.

5.2.4.1 Challenges to the Development at Yucca Mountain

The development of a national geological repository for radioactive waste has significant opposition and the project has faced continual challenges. Every year there are efforts to reduce funding to the program in appropriation debates in Congress. Interveners have challenged every significant decision and milestone in regulatory proceedings and in the courts and will likely continue to do so.

5.2.4.2 Funding Challenges

The development of Yucca Mountain is paid for by funds paid by customers of utilities who own and generate electricity from nuclear power plants. A fee of 1 mil (0.1 cents) for each kilowatt-hour generated by a nuclear power plant is collected and paid to the federal government. These fees are placed into the federal government's general fund and Congress must act each year to appropriate the collected funds to the Yucca Mountain project. Through December 2006, (latest numbers available) Xcel Energy's consumers have paid over $620 million into the

federal Nuclear Waste Fund to finance nuclear waste management. Nationally, consumers have contributed $25.9 billion into the federal Nuclear Waste Fund. Through December 2006, the DOE has only received $6.1 billion in disbursements from the Nuclear Waste Fund. For fiscal year 2008, the DOE requested $495 million and was appropriated $387 million. We continue to work with Congress and industry groups to find a solution, which would provide stable funding for the Yucca Mountain Project in the future.

5.2.4.3. Judicial Challenges

On July 9, 2004, the U.S. Court of Appeals issued a decision on a group of consolidated cases through which Nevada challenged the federal government's program designating Yucca Mountain as the site of the nation's spent nuclear fuel repository. The court rejected all of Nevada's claims, except its challenge regarding the 10,000-year compliance period for meeting U.S. EPA regulatory requirements. The court also stayed its own mandate pending further legal review, allowing work on the repository to continue, with all regulations remaining in effect. On August 23, 2004, the Nuclear Energy Institute (NEI) filed a petition with the U.S. Court of Appeals for the District of Columbia Circuit seeking a rehearing of the July 9, 2004, decision by a three-judge panel on Environmental Protection Agency standards for the planned Yucca Mountain nuclear waste repository. The petition states that the court improperly set aside EPA's choice of a 10,000-year compliance period for evaluating repository performance. The U.S. Court of Appeals has rejected the NEI appeal, and no further appeal is possible. The EPA is currently in rulemaking to establish a new standard to replace the 10,000-year compliance period. The new standard is necessary to support the NRC's review of DOE's application to construct Yucca Mountain. If the new standard is not issued soon, the licensing and developing of Yucca Mountain could be further delayed.

5.2.4.4. Prospects

While the DOE has overcome many challenges in the past and continues to work through current challenges, we do not believe that DOE will begin accepting waste at Yucca Mountain in 2017. Some argue that Yucca Mountain or any permanent repository for nuclear waste will never be available. We do not believe that contention is tenable. The federal government made a legally binding commitment to provide a nuclear waste repository to utilities and the citizens of the United States. As time passes it will become more politically unpalatable to leave spent nuclear fuel and defense-related radioactive waste in the thirty-three states where it

is stored today. The courts have ruled that the federal government is responsible for the costs associated with their failure to meet their contractual obligations to take spent nuclear fuel from commercial reactors. As the costs mount, pressure to overcome political inertia and to act will increase. Nonetheless, controversy surrounding the process of establishing a federal repository is expected to continue which will lengthen the process and delay implementation. We have reflected the possibility of further delay in our analysis of spent fuel storage and its impact on plant operations in the future.

5.3 Alternatives to Increase Pool Storage Capacity

5.3.1 Consolidation

Fuel rod consolidation is a process that reduces the volume of the fuel assemblies by disassembling and repackaging the fuel rods and assembly hardware.

Fuel rod consolidation and hardware processing can be performed in the existing spent fuel pool. During this process, fuel rods are removed from the fuel assembly. The rods are then grouped in a closer-packed array and placed in a container with similar dimensions as a fuel assembly. The assembly hardware is compacted and then packed into separate containers in the pool or in a dry storage configuration.

Fuel rod consolidation has not been widely used and the domestic nuclear industry experience with consolidation is not extensive beyond demonstration projects. Consequently, the technology is not optimized or commercially mature as other alternatives. Rod consolidation would require a complex and site-specific solution, if implemented.

NSP conducted a fuel rod consolidation demonstration project at the Prairie Island Nuclear Generating Plant in 1986. The results of this project were reported in the Prairie Island Certificate of Need Docket No. E-002/CN-91-1. Although some volume reductions for spent fuel were realized, NSP found that predicted compaction ratios for assembly hardware were not achievable. Moreover, the occupational dose was significantly higher than predicted because workers were subject to increased exposure from the many time-consuming and labor-intensive fuel-handling activities. Prairie Island also found that the consolidated assembly hardware had become activated and large portions of the assembly could not be disposed of as Class C waste, which would have reduced volume. The NSP study found that consolidation would also generate significant amounts of radioactive

debris. The study estimated an additional 600 cubic meters of low level radioactive waste containing 2500 curies would be generated from consolidation activities.

In January 2001, the DOE's Office of Civilian Management provided a report to the U.S. Congress entitled, *Spent Fuel Management Alternatives Available to Northern States Power Company Inc. and the Federal Government for the Prairie Island Nuclear Plant Units 1 & 2*. The report contained the following excerpt on rod consolidation at PI:

> *"In the 1980's, DOE, the utility industry, and several nuclear equipment vendors developed consolidation processes and equipment; and several utilities undertook demonstration projects to test the processes and equipment. NSP demonstrated the consolidation of 36 assemblies at Prairie Island in late 1987. These demonstrations encountered numerous and varied difficulties, which were not easily resolvable. To date, no utility has pursued rod consolidation as a means of expanding onsite storage capacity for SNF."*

We are not aware of any recent industry initiatives or design advances that would render rod consolidation to be a more viable alternative. We are also not aware of any domestic nuclear plant owner that is seriously considering rod consolidation as a long-term solution to spent fuel storage.

Therefore, we conclude that consolidation is not a viable alternative to dry storage at Prairie Island.

5.3.2 Extend Operation by Re-racking to Increase Pool Storage

Re-racking is a process by which the storage racks are replaced with storage racks designed to provide a more compact array for storing the spent fuel assemblies. Re-racking has already been performed twice at Prairie Island, once in 1977 and again in 1981. The current licensed storage capacity of the spent fuel pool is 1386 fuel assemblies. In 1995, a feasibility study was performed to assess the potential increase in wet storage capacity via the use of state-of-the-art storage racks. The study concluded that it might be possible to gain up to 790 storage cells within Prairie Island's spent fuel storage pools. An increase in wet storage of 790 spent fuel assemblies is not sufficient additional storage to support 20 years of extended operations.

Therefore, re-racking to increase pool storage is not a viable alternative to establishing dry storage at Prairie Island to support 20 years of extended operations.

5.3.3 Construct a New On-Site Pool

This alternative entails constructing a new building containing a new spent fuel storage pool. The new building and pool structure would be designed and constructed to the same or higher standards as the existing spent fuel storage pool and would be licensed and regulated by the NRC. A transfer cask would be required to transfer spent fuel assemblies from the existing pool to the new pool. Under this alternative, the number of times the spent fuel assemblies are handled would most likely triple; first, to place it in the transfer cask to move it to the new pool; second, to remove it from the transfer cask to place it in the new storage pool and third, into a dry cask for transport offsite.

A new storage pool would require the same components as the existing pool and would rely on active cooling rather than passive cooling systems. These components would include storage racks, pool cooling and filtration systems, pool bridge crane and fuel assembly handling tools, building ventilation systems, radiation monitoring equipment and a cask decontamination area. It would take an estimated three years to design a new pool building and to complete state and federal reviews and approvals. Construction would last approximately two years, and thus, the total design and construction period would be approximately five years. The new storage pool would likely be located at close as possible to the existing spent fuel storage area.

This alternative was evaluated in the 1991 Prairie Island Certificate of Need Application. The estimates of the project costs in 1991 were on the order of $31 million to build, $0.5 million per year to operate, and $50 million to decommission the pool. This estimate did not include costs associated with purchasing hardware or plant personnel to load and transport the spent fuel to Yucca Mountain when it becomes available.

5.4 Alternative Dry Cask System Technologies

Currently, there are four types of storage system technologies available for dry storage of spent nuclear fuel. All four systems rely on passive cooling to remove decay heat from the spent fuel. The four technologies vary in the manner in which they store the spent fuel, how they accommodate the transfer of spent fuel from the power plant, and how they are transported. The four types of systems are as follows:

- Non-Canisterized Storage System

- Horizontal Canisterized Storage System
- Vertical Canisterized Storage System
- Modular Vault Dry Storage System

The following sections present each system and discuss the advantages and disadvantages of each system. A comparison of major attributes of each system is presented in Table 5-1.

5.4.1 Non-Canisterized Storage Systems

The non-canisterized storage system is the proposed system for Prairie Island. The non-canisterized storage system is the system currently used by Prairie Island for storing fuel at the Prairie Island ISFSI. It consists of a single robust metal storage component called a cask that has a lid that is bolted to the cask. The cask is the primary confinement boundary. The casks are designed to store 40 spent fuel assemblies in an internal basket or in storage cells dispersed throughout the cask. The casks are passively cooled. The TN-40 cask currently in use at Prairie Island is licensed for storage under 10 CFR 72. Transnuclear applied for a transportation license for the TN-40 on August 7, 2006. The enhanced version of the TN-40, the TN-40HT, is expected to be licensed for a higher burnup fuel and is expected to be licensed for transportation also.

The thick steel cask body provides physical protection and radiation shielding of the spent fuel. The casks use a bolted closure consisting of a single lid with dual metallic seals. The annulus between the seals is pressurized and connected to a system that monitors the annulus for loss of pressure. The casks are stored outdoors on a concrete pad.

The loading process consists of inserting the cask into the pool, loading the spent fuel, removing the cask from the pool, bolting the lid, drying and inerting the cask with helium, and transporting the cask to the ISFSI.

The advantages of using a non-canisterized storage system at Prairie Island include:

- This system has been in use at Prairie Island since 1994 (TN-40).
- The new cask (TN-40HT) is being designed and licensed for both storage and shipping, eliminating the need to transfer spent fuel between different casks.

- The casks can be loaded and shipped directly offsite without having to repackage the fuel assemblies in the spent fuel pool or transfer a cask.
- No welding is required which reduces loading time and associated worker doses during the loading phase.
- Construction costs to expand the ISFSI concrete pads will be minimal. Changes are not required until 2020.
- Prairie Island has all the necessary equipment, procedures and experience to safely load and transfer a cask to the ISFSI.

The disadvantages of using a non-canisterized storage system at Prairie Island include:

- A pressure monitoring system is required to ensure no leakage of O-ring seals in bolted storage cask lid.

Some of the highlights of the proposed system are:

Location: The non-canisterized system would be located on Prairie Island's site.

Land area and height of facility: Since the proposed non-canisterized system involves using an enhanced version of the existing TN-40 cask design and would be placed within the footprint of the existing ISFSI, there is no change in the land area and height of the facility.

Design capacity: The non-canisterized system would be constructed to support 20 additional years of plant operation.

Construction and In-service dates: The non-canisterized system is the system currently in use at Prairie Island and has been in service since 1994. The system is designed to accommodate 48 TN-40 (or TN-40HT) casks and thus no construction of new storage pads would be necessary until approximately 2020.

Installed costs: The non-canisterized system is the technology that has been used at Prairie Island for storage of spent fuel for over 10 years. The cost for these previous loading campaigns is well documented and provides a good basis for estimates of projected costs for the procurement, loading, ISFSI pad modifications, and transport to the ISFSI pad for the additional 35 casks over the next 26 years.

Sources, types and amounts of waste involved: The nuclear waste involved is spent fuel and associated hardware irradiated at Prairie Island. The proposed system calls for

a total storage of 2,560 spent fuel assemblies to be stored in 29 TN-40 casks and 35 TN-40HT casks.

Maintenance requirement: Typical maintenance tasks involve occasional replacement and recalibration of monitoring instrumentation and touchup of some casks with corrosion-inhibiting coatings. No special maintenance techniques are necessary.

Economic life: The length of time of operation of the ISFSI depends on how long Prairie Island will operate and the availability of off-site storage or a permanent repository. At this time since the expansion of the ISFSI is sized to store enough fuel to support operation for twenty years beyond Prairie Island's current license expiration date it is anticipated that the economic life of the ISFSI will be until October 2034 when the renewed Plant's license will expire.

Reasons the alternative was selected: The proposed system is the system that has been used by Prairie Island to safely store fuel for over 10 years. Thus Prairie Island already has all the equipment, procedures, and infrastructure needed to safely load and transport a cask to the ISFSI. The system is simpler than most of the alternatives, e.g. no welding or transfer of a loaded canister from a transfer cask to a storage vault. The relatively higher number of fuel assemblies that may be stored within a cask, e.g. 40 vs. 24, reduces the number of casks/containers that must be loaded, transferred, and stored in the ISFSI.

Based upon this experience and the minimal impact on Prairie Island to continue with the technology currently being used, the non-canisterized system is the technology that has been determined to be the least-cost over the extended plant life than the other technologies considered. The ISFSI is already designed to accommodate 48 TN-40 style casks and there will only be 29 on-site at the end of the current operating licenses, thus new construction would not be necessary until approximately 2020.

5.4.2 Horizontal Canister Storage System

The horizontal canister storage system consists of a welded sealed metal canister to contain spent fuel assemblies and provide the primary confinement boundary; concrete storage modules that house the canisters; a transfer cask to handle the canisters; and a transportation cask to ship the canisters offsite. The storage module, transfer cask and transportation cask provide radiation shielding and physical protection, during canister transportation, transfer, or storage. A typical canister will hold 24 or 32 PWR spent fuel assemblies.

The transfer cask is used to lift and provide radiation shielding of the canister during spent fuel loading, and storage preparation activities. After the canister is loaded, it is drained, dried, inserted with helium, and welded closed. The canister is then transferred using the transfer cask, moved to the ISFSI, and loaded into the storage module for storage. The canister transfer operation occurs at the ISFSI by sliding the canister from the transfer cask into the storage module. This operation occurs in a horizontal configuration so no overhead crane is required. The individual modules are placed on a concrete base mat next to each other to form a linear array. The modules are designed with a passive natural convection heat transfer system. The process can be reversed to transfer the canister from the storage module directly into a shipping cask. The shipping cask can be loaded onto a railcar for removal offsite.

The concrete storage modules are designed to provide passive heat transfer by natural convection from the canister through air vents built into the module. The air vents require periodic inspection to ensure they do not become blocked and a temperature monitoring system to ensure canister temperatures do not reach levels that could damage the system materials. The concrete storage module is a pre-cast reinforced concrete structure, which is fabricated offsite and shipped to the site where it can easily be placed on a concrete storage pad.

Figure 5-1: NUHOMS Cask

Currently, the only horizontal system available is the TN NUHOMS[20] (Nuclear Horizontal Modular System) designed, licensed and manufactured by Transnuclear, Inc. Figure 5-1. The system is used at several nuclear power plants throughout the United States as well as at several foreign reactors.

The advantages of using a horizontal canisterized storage system include:

[20] This system is currently used at the Monticello Plant.

- Once welded closed, the canister never needs to be opened, which avoids having to expose or handle individual spent fuel assemblies.
- The concrete module is pre-fabricated and shipped to the site where it can easily be placed at the ISFSI.
- All canister transfers between the transfer cask and the storage module can be performed without the use of an overhead crane.
- To ship offsite, the canister needs only to be transferred from the storage module to the shipping cask without having to unload fuel in the fuel pool.

The disadvantages of using a horizontal canisterized storage system include:

- The canisters have to be transferred between transfer casks, storage modules and transportation overpacks, which increases radiation doses to workers.
- The canisters require welding and weld inspection, which increases storage preparation time, which in turn increases worker doses.
- A temperature monitoring system and/or vent blockage inspection are required to ensure proper heat rejection from the canister.
- Currently only the NUHOMS canister design licensed to store the high burnup fuel irradiated at Prairie Island is the NUHOMS-24PTH, which holds only 24 fuel assemblies.
- Transnuclear, Inc. does have a design that holds 32 fuel assemblies, i.e. the NUHOMS-32PTH, but it is not licensed for the type of fuel used at Prairie Island. In order to use this canister design, additional analyses would have to be performed and a NRC license obtained to use the cask with our fuel.
- The maximum ground load of the NUHOMS (130 psi) exceeds the designed load of the ISFSI Access road and buried ductworks (100 psi). Thus, the Access road and buried ductworks would have to be reanalyzed and possibly strengthened.

Some of the highlights of this alternative are:

Location: The horizontal canister system would be located on Prairie Island's site.

Land area and height of facility: The horizontal canister system should be able to be installed within the footprint of the current ISFSI, thus there would be no change in the required land area. The height of the horizontal canister storage system is

comparable to that of the non-canisterized system and thus the height of the facility would not change.

Design capacity: The horizontal canister system could be constructed to support 20 additional years of plant operation.

Construction and In-service dates: To support continued operation during the renewed operating life of Prairie Island, construction needed to transition to the horizontal canister system would need to commence in 2010 to support storing fuel no later than 2012.

Installed costs: The horizontal canister system technology is a viable technology that is used at other nuclear facilities, including at Monticello. Associated costs of this technology from these other utilities have been used to develop the costs of this technology if used at Prairie Island. Comparative evaluations of this horizontal canister system technology and the currently used technology have been conducted and show this technology to be higher in cost. These higher costs are attributed to higher costs for the canister and concrete storage module. Additional increased costs for this technology are attributed to cask loading, personnel radiation impact due to cask loading, modifications to the ISFSI, and extra procedure development and training to accommodate a new technology.

Sources, types and amounts of waste involved: The nuclear wastes involved in this alternative would be identical to those involved in the proposed system.

Maintenance requirement: Ongoing maintenance activities would be similar to the proposed system.

Economic life: The economic life would be similar to the proposed system.

Reasons the alternative was rejected: Transitioning from the non-canisterized system to a canister system would require construction at the ISFSI site to occur approximately 10 years earlier. It would also necessitate the purchase of new major equipment (e.g. a transfer cask, trailer, automatic welding machines, and building to store new equipment). The loading process is more complicated for the canister storage system, e.g. welding and transfer of a canister, which would require new and specialized training for the workers. Currently only the NUHOMS-24 PTH, which only holds 24 fuel assemblies, is licensed to store the high burnup fuel design utilized at Prairie Island. Thus, this system would require 66% more canisters be purchased, loaded, transferred, and stored than casks in the proposed system. Handling more canisters would increase the dose received by the workers and the cost per fuel assembly stored. The number of canisters could be reduced if

the NUHOMS-32PTH could be analyzed and licensed for the high burnup fuel design used at Prairie Island. But, it would still require more canisters than casks.

5.4.3 Vertical Canisterized Storage Systems

The vertical canisterized storage system, as illustrated in Figure 5-2, typically consists of a welded sealed metal canister to contain spent fuel assemblies and provide the primary confinement boundary, concrete or metal storage overpacks to house the canister, a transfer cask to handle the canister, and a transportation cask to ship the canister offsite.

Figure 5-2: Vertical Canisterized Storage System

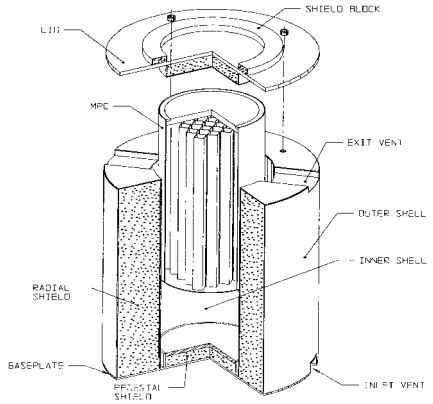

The storage overpack, transfer cask and transportation cask provide radiation shielding and physical protection, during canister transportation, transfer, or storage. A typical canister will hold 24 to 32 PWR spent fuel assemblies. The systems are typically licensed under 10 CFR 72 for storage and 10 CFR 71 for transportation.

The transfer cask is used to lift and provide radiation shielding of the canister during spent fuel loading, and storage preparation activities.

After the canister is loaded, it is drained, dried, inserted with helium, and welded closed. The canister is then transferred from the transfer cask to the storage overpack and moved out to the ISFSI for storage. The canister transfer operation would typically occur in the rail or truck bay of Prairie Island. However, as this operation requires a supporting floor that can handle upwards of 500,000 lbs., many plants cannot support that magnitude of load. If the floor cannot be modified to support the load, a separate canister transfer structure would be built to provide the transfer. This structure typically consists of a large crane component

to lift the transfer cask on top of the storage overpack and to move the canister between the transfer cask and storage overpack. The same process is required to move the canister between the storage cask to a transfer cask to a shipping cask.

The concrete storage overpacks, shown in Figure 5-3, are designed to provide passive heat transfer by natural convection from the canister through air vents built

Figure 5-3: Concrete Storage Overpacks

into the overpack. The air vents require periodic inspection to ensure they do not become blocked or a temperature monitoring system to ensure canister temperatures do not reach levels that could damage the system materials. Metal storage overpacks provide passive heat transfer by conduction through the overpack body. The overpacks are stored outdoors on a concrete pad. Concrete overpacks are shipped to the site as a steel frame where concrete is poured in-place to provide a radiation shield.

Currently, vertical systems are provided by two companies; Holtec International and NAC Inc. They are in use at several nuclear power plants throughout the United States.

The advantages of using a vertical canisterized storage system include:

- Once welded closed, the canister never needs to be opened, which avoids having to expose or handle individual spent fuel assemblies.
- To ship offsite, the canister needs only to be transferred from the storage cask to the shipping cask without having to unload fuel in the fuel pool.

The disadvantages of using a vertical canisterized storage system include:

- The canisters have to be transferred between transfer casks, storage modules and transportation overpacks, which increases radiation doses to workers.

- The canisters require welding and weld inspection, which increases storage preparation time, which in turn increases worker doses.
- A temperature monitoring system and/or vent blockage inspection are required to ensure proper heat rejection from the canister.
- The storage overpacks must be filled with concrete at the site requiring on-site fabrication work and a fabrication area.
- A transfer vehicle would have to be specifically designed and fabricated to transport the overpack through the narrow auxiliary building door.
- The canister transfer process requires a robust floor to support all the components or a separate structure with a robust base and overhead lifting component such as a crane.

The following discussion highlights some of the aspects of this alternative:

Location: The vertical canister system would be located on Prairie Island's site.

Land area and height of facility: The vertical canister system should be able to be installed within the footprint of the current ISFSI, thus there would be no change in the required land area. The height of the vertical canister storage system is comparable to that of the non-canisterized system and thus the height of the facility would not change.

Design capacity: The vertical canister system would be constructed to support 20 additional years of plant operation.

Construction and In-service dates: To support continued operation during the extended operating life of Prairie Island, construction needed to transition to the vertical canister system would need to commence in 2010 to support storing fuel no later than 2012.

Installed costs: The vertical canister system technology is a viable technology that is used at other nuclear facilities. Associated costs of this technology were developed from a 2002 feasibility study that evaluated converting from the non-canister system currently used at Prairie Island to a vertical canister system. The Comparative evaluations of the vertical canister system technology and the currently used technology show the vertical canister technology to be higher in cost. These higher costs are attributed mainly to higher costs for the canisters and overpacks. Additional increased costs for this technology are attributed to the

purchase of additional major equipment and extra procedure development and training to accommodate a new technology.

Sources, types and amounts of waste involved: The nuclear wastes involved in this alternative would be identical to those involved in the proposed system.

Maintenance requirement: Ongoing maintenance activities would be similar to the proposed system.

Economic life: The economic life would be similar to the proposed system.

Reasons the alternative was rejected: Transitioning from the non-canisterized system to a canister system would require construction at the ISFSI site to occur approximately 10 years earlier. It would also necessitate the purchase of new major equipment (e.g. a transfer cask, trailer, automatic welding machines, building to store new equipment, a fabrication facility to construct the concrete storage overpacks). The existing concrete storage pads may not meet the designed requirements for the vertical canister system thus requiring construction of more storage pads within the ISFSI. The loading process is more complicated for the canister storage system, e.g. welding and transfer of a canister, which would require new and specialized training for the workers. Currently, only the canisters licensed to hold 24 or 32 assemblies are licensed to store fuel to the burnup levels needed to store the spent fuel irradiated at Prairie Island. Thus, this system would require that more canisters be purchased, loaded, transferred, and stored than casks in the proposed system. Handling more canisters would increase the dose received by the workers and the cost per fuel assembly stored.

5.4.4 Modular Vault Dry Storage System

The modular vault dry storage (MVDS) system is a large concrete storage vault designed to store several storage containers of spent nuclear fuel. MVDS differs from the other systems in that, rather than storing individual casks on a concrete storage pad outdoors, the spent fuel is stored in tube like containers within the concrete storage vault. The facility is licensed under 10 CFR 72 for storage and would require the use of shipping casks licensed under 10 CFR 71 for spent fuel shipping offsite.

The MVDS system consists of the storage vault, which is really a large concrete building, fuel storage containers to hold the spent fuel assemblies, a container handling machine to transfer the containers, a charge face structure that supports the fuel containers, and an overhead crane to lift the container handling machine.

(Figure 5-4) Several vaults can be constructed end-to-end to provide a longer vault. Each vault is designed to hold up to 83 PWR fuel assemblies within shielded storage tubes. MVDS also relies on passive cooling.

The MVDS is offered by Foster Wheeler Energy Applications, Inc. The system is in use at the decommissioned Ft. St. Vrain nuclear plant.

Figure 5-4: MVDS System

The advantages of using an MVDS system include:

- The MVDS system design is currently licensed for use at a plant that has been decommissioned.
- Once sealed, the canister should never need to be reopened to expose or handle individual spent fuel assemblies, which avoids potential contamination to the environment and workers.

The disadvantages of using an MVDS system include:

- The extended schedule associated with the construction of the large MVDS building.
- The high number of spent fuel transfers between the fuel pool and MVDS or from the MVDS to offsite because the fuel storage containers only hold a single spent fuel assembly.
- Additional radiation exposure to workers associated with the increased number of container handling transfers.
- Inspections of the MVDS building to ensure no inlet duct vents are blocked.

A high initial capital cost to construct a MVDS building to store all the fuel.

- Not currently licensed to store the high enrichment and high burnup fuel used at Prairie Island.

Some of the highlights of this alternative are:

Location: The vault system would be located on Prairie Island's site but may not be able to be located within the footprint of the existing ISFSI due to the need to maintain accessibility to the TN-40 casks with the cask transport vehicle.

Land area and height of facility: The required land area for the MVDS system would be slightly less than the current ISFSI footprint since accessibility to the side of the vaults is not required, i.e. do not need to account for turning radius of cask transport and tow vehicle. While the height of the MVDS system itself is taller than the TN-40 casks due to the need for the overhead container handling machine, the tallest structure would be the light poles and these would be essentially the same as the height light poles.

Design capacity: The vault system would be constructed to support 20 additional years of plant operation.

Construction and In-service dates: The MVDS system is currently used by a single user. Currently the system is not designed and licensed to store the high enrichment high burnup fuel that Prairie Island needs to store. Thus more analyses would be required followed by obtaining an NRC license. These activities could take 3 or more years to complete. Currently there is no market for this method of onsite storage and thus the licensing and construction would be developed specifically for Prairie Island. It's anticipated that the system could be constructed and the transfer system fabricated within 24-36 months after obtaining an NRC license.

Installed costs: Since there is no market for this method of onsite storage, there are no bids to be evaluated for comparison. However, the installation cost for this system would be much higher than the proposed system since the building and vault modules are sized and placed in service during the initial construction rather than being installed on an as needed basis. In addition it may not be able to be located within the footprint of the existing ISFSI and thus require a new ISFSI site to be constructed. Therefore the cost of this system is expected to be significantly higher than the proposed system.

Sources, types and amounts of waste involved: The nuclear wastes involved in this alternative would be identical to those involved in the proposed system.

Maintenance requirement: Ongoing maintenance activities would be similar to the proposed system.

Economic life: The economic life would be similar to the proposed system.

Reasons the alternative was rejected: The MVDS System is expected to have greater upfront costs both for the design & licensing effort as well as the initial installation when compared to the proposed system. The vault system has a single user and its primary use was to support a decommissioning effort for the Fort St. Vrain plant compared to the proposed system, which has been utilized by Prairie Island since 1994. Transferring fuel to the MVDS system would be much more time consuming and complicated since only a single fuel assembly is placed in a storage tube and transfer of the tube involves additional handling compared to the proposed system.

Table 5-1: Comparison Of Dry Cask Storage Systems[1]

Storage System	Primary Components	Transfer Method	Closure Type	Monitor Req'mts	Storage Method	Transport Method	SFA Capacity
Non-Canisterized Storage System	Storage/Transportation Cask	N/A	Bolted cask w/ O-rings	Helium Pressure	Metal Cask	Metal Cask	40 PWR
Horizontal Canisterized Storage System	Metal canister Concrete storage module Transfer cask Shipping cask	Canister Transfer	Welded canister	Temp. and/or Vent Blockage	Canister in Concrete Module	Metal Shipping Cask	24-32 PWR
Vertical Canisterized Storage System	Metal canister Concrete or metal storage overpack Transfer cask Transportation cask	Canister Transfer	Welded canister	Temp. and/or Vent Blockage	Canister in Concrete or Metal Overpack	Canister in Shipping Cask	24-32 PWR
Modular Vault Dry Storage System	Metal storage container Vault building Transportation cask	Canister Transfer	Bolted container w/ O-rings	Pressure and Vent Blockage	Fuel Storage Container in Concrete Vault	Container in a Shipping Cask	1 PWR

NOTES:

1. Based on existing designs that are currently licensed.

5.5 Alternatives of a Different Size

This Certificate of Need addresses the question of the need for additional spent fuel storage to support 20 years of plant operation beyond the end of the current operating license. There is considerable uncertainty surrounding when off-site storage alternatives might become available. No other viable on-site alternatives (besides utilizing a dry cask storage system) have been identified. The only way to ensure that Prairie Island is available on a reliable basis to facilitate long-term planning for our ratepayers is to expand the allowed storage of the facility to allow the 20 years of continued operation. In addition, if the expansion is not granted to support additional 20 years of operation, additional storage will still be necessary to support decommissioning. The footprint of the existing ISFSI will accommodate either outcome without changing size of the existing ISFSI.

5.6 Alternative Site

Minnesota law requires that spent nuclear fuel storage be limited to the Prairie Island site at which the fuel is used (Minn. Stat. § 116C.83 subd. 4b). Therefore, in order to extend the operation of Prairie Island, additional dry cask storage must be established on the Prairie Island Nuclear Generating Plant site. Northern States Power Company undertook a study to identify locations on the Prairie Island site suitable for cask storage as part of the Application for a Certificate of Need dated April 29, 1991 (and revised June 10, 1991). The results of that study and the 1991 Certificate of Need process selected the location of the existing ISFSI located at Prairie Island. Since there is sufficient room within the footprint of the existing ISFSI to store all 64 casks, the construction of a new ISFSI at an alternative site is not necessary.