2. Project Description

This section describes the construction and operation of the Project and alternatives considered in this EIS. Alternatives to the Project were screened to assess the ability of the alternatives to meet the identified need for the Project and to provide a comparison of the impacts of different alternatives in meeting the identified need for the Project. Based upon this screening, a No-Build Alternative and three route alternatives are evaluated in this document, as described in Section 2.2. In addition to these four alternatives, a number of system and route alternatives were considered, but not evaluated in detail; these alternatives not evaluated in the EIS are described in Section 2.3.

2.1. Project Alternatives

Several alternatives to the Project were identified during the Applicants' development of the Project and during the public scoping process carried out by OES and RUS. Two types of alternatives to the Project were developed and evaluated:

- System alternatives, which look at alternative means for meeting the stated need of the Project; and
- Route alternatives, which look at alternative routes to get from one end point to another.

2.1.1. System Alternatives

Both the RUS scoping requirements and the Commission's Certificate of Need process require review of alternative methods of meeting the purported need for the Project; see Sections 1.3 and 1.2. Both the *Alternative Evaluation Study*, prepared in accordance with RUS guidelines, and the *Environmental Report: Bemidji to Grand Rapids 230 kV Transmission Project*, prepared in accordance with Commission guidelines, considered three alternatives to meeting the need of anticipated customer demand into the future:

- No-Build Alternative;
- Use of demand-side management and conservation measures;
- Transmission system alternatives, including existing line or system improvements; and
- Generation alternatives.

Both the *Alternatives Evaluation Study* and the Commission's July 14, 2009 order granting a Certificate of Need for the Project found that none of the system alternatives evaluated were able to meet the identified need as well or at a comparable cost as the Project.

2.1.2. Route Alternatives

Minnesota Statute (Minn.Stat. 216E.03, subd. 3) and rules (MN Rules 7850.1900, subp. 2) establish the requirements for submitting and processing a permit application. Under these rules, the Applicants must present information for at least two routes for a proposed high voltage transmission line (HVTL) in their *Route Permit Application* to the Commission. The Applicants must also identify in the application the preferred route for the transmission line and at least one alternative route.

In accordance with these rules, the Applicants presented information for two routes in their June 4, 2008, *Route Permit Application*. Both of these routes are generally in the vicinity of U.S. Highway 2 (Figure 2-1). Route 1 (identified by the Applicants as their preferred route) generally follows the Great Lakes Gas Transmission Company pipeline and a 115 kV transmission line right-of-way (ROW); Route 2 (the Applicants Alternate Route) generally follows U.S. Highway 2 and the Enbridge pipeline ROWs. Under Minnesota Statute 216E.03, the EIS must evaluate alternatives proposed by the Applicants. The *Route Permit Application* also contains several alternative segments proposed by the Applicants to avoid or minimize impacts to certain sensitive areas. These segments are discussed in greater detail in Section 2.2.

Figure 2-1: Applicant-Identified Route Alternatives

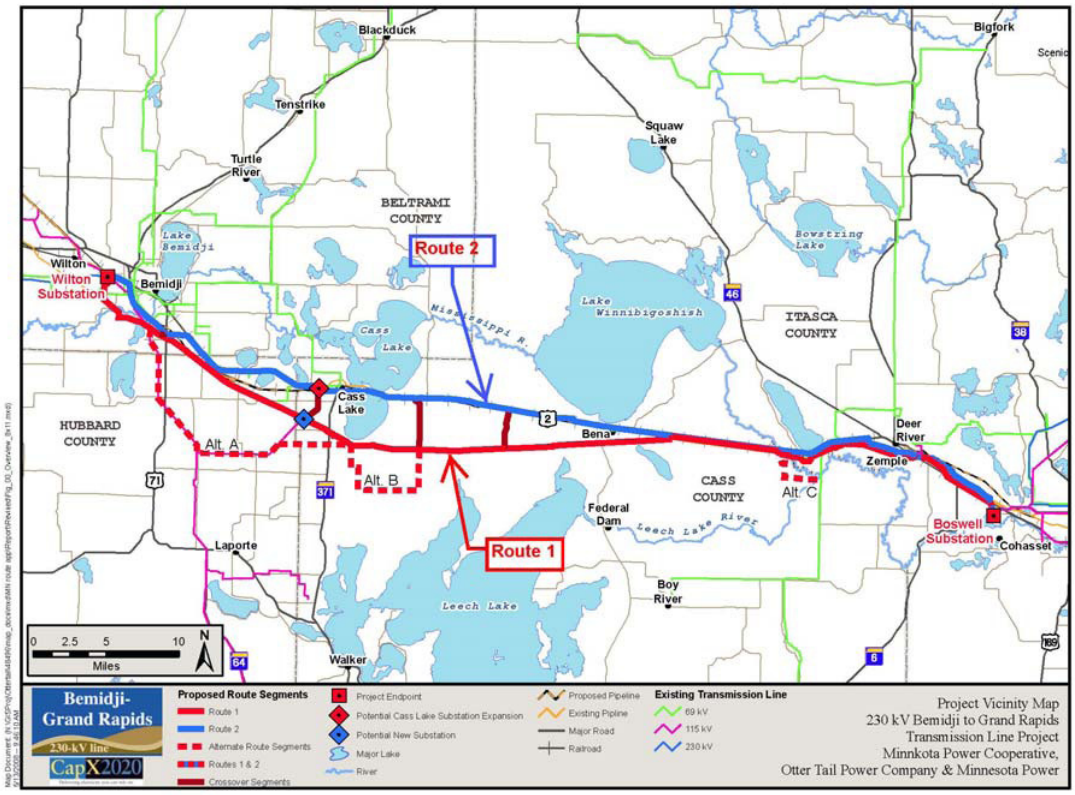

The federal agencies consider both of the Applicant-proposed routes to be located within one study area, referred to as a "Macrocorridor" in their screening materials. At the request of the CNF, RUS, and LLDRM three additional Macrocorridors were developed by the Applicants to evaluate whether potentially routing along one of these corridors might merit further investigation (Figure 2-2). These four Macrocorridors (referred to as the Central, North, South and non-CNF) were evaluated in the *Macrocorridor Study Report* discussed in Section 1.4.2. Notices, identifying the Macrocorridors on maps, were published in area newspapers and in direct mail notification to approximately 11,000 potentially affected landowners.

Figure 2-2: Federal Macrocorridors Identified

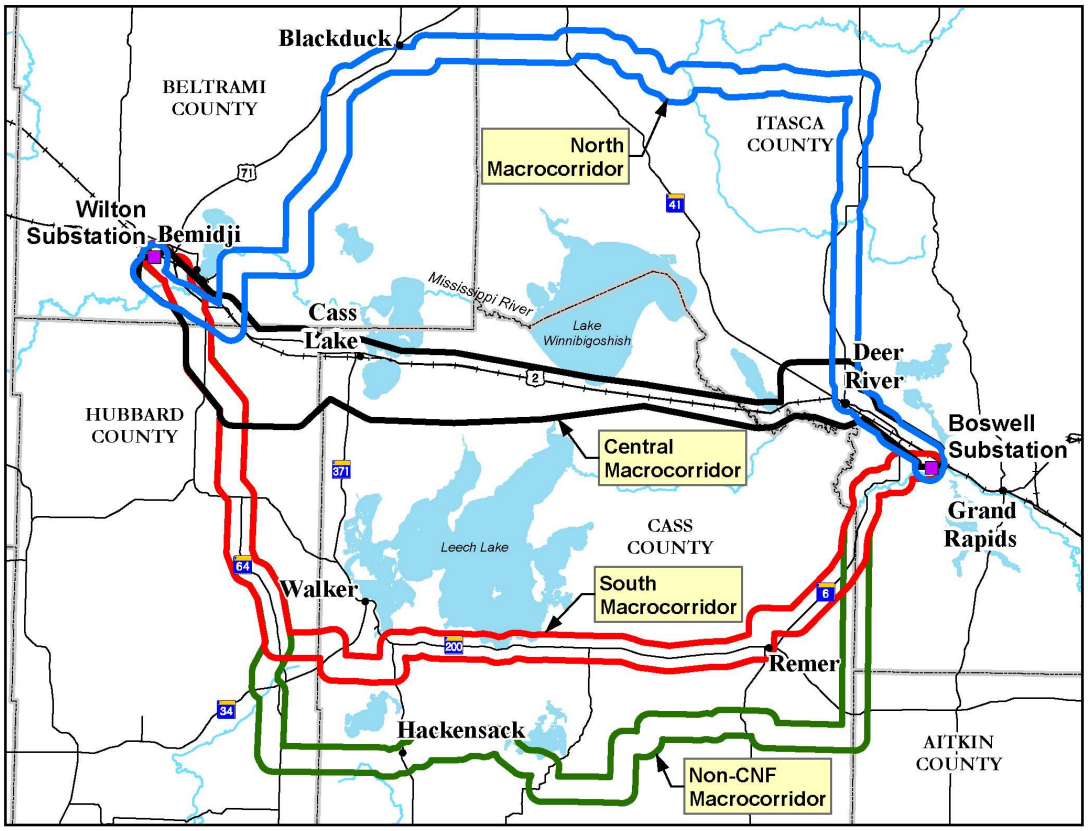

The federal agencies require that the EIS evaluate a potentially viable route alternative that is different than the two route alternatives proposed by the Applicants. In conjunction with the Applicants, OES staff developed 1,000-foot routes within each of the additional three "macrocorridors" and compiled a variety of social and environmental data on each of the routes. As discussed in the RUS *Scoping Decision/Report* (see Appendix A), staff from OES, the LLBO, and federal partner agencies reviewed more detailed social and environmental information for the five routes (i.e., the two Applicant-proposed routes and one in each of the additional three macrocorridors).

During this review process, a number of concerns related to Route Alternatives 1 and 2 were identified by agencies participating in the environmental review. More information on these concerns is provided in the RUS *Scoping Decision/Report* (Appendix A) and in the public comment summary (Appendix B).

Issues Identified with Route Alternative 1: The agencies identified potentially significant impacts to traditional cultural, biological, and socioeconomic resources along this Route Alternative. Additionally, impacts to the "10 Section" area or the Pike Bay Experimental Forest would require a Forest Plan Amendment. Although several flaws

were identified with this Route Alternative, Minnesota Statute 216E.03, subdivision 5, requires the evaluation of all routes proposed by the Applicant.

Issues Identified with Route Alternative 2: The issues identified with Route Alternative 2 were primarily related to its location adjacent to several utilities (pipelines and transmission lines) and transportation resources (highways and railroads). In many areas this Route Alternative would add yet another easement to properties already encumbered by multiple pipeline easements. Additionally, there may be engineering constraints in some areas due to the number of existing utility and transportation uses in a narrow corridor. Although several flaws were identified with this Route Alternative, Minnesota Statute 216E.03, subdivision 5, requires the evaluation of all routes proposed by the Applicant.

It was concluded that in addition to the Route Alternatives proposed by the Applicants, one additional route, located in the North macrocorridor, should be fully evaluated in the EIS. This Route Alternative avoids the major gateway to the Chippewa National Forest and avoids bisecting the Leech Lake Reservation.

2.2. Alternatives Considered in the EIS

As discussed above, a No-Build Alternative and three Route Alternatives (shown in Figure 2-3) are evaluated in this EIS. Route Alternatives can be summarized as follows:

No-Build Alternative: Under this alternative, no transmission line would be constructed. As discussed in Section 2.1.1, this Alternative does not meet the defined need for the Project. Nevertheless, a No-Build Alternative is evaluated in this document in accordance with the Council on Environmental Quality NEPA regulations (40 CFR 1502.14) requiring review of a no-action alternative.

Route Alternative 1: This route, referred to as Route 1 in the *Route Permit Application*, is approximately 69 miles long and generally follows the Great Lakes Gas Transmission Company pipeline and an 115 kV transmission line ROWs. This alternative would add equipment to the Wilton Substation and expand the Boswell Substation by approximately 1.3 acres to accommodate additional equipment. Under this alternative, a new 230 kV substation would be constructed in Pike Bay Township in Cass County. If certain segment alternatives are used in association with this Route Alternative, a new Nary 115 kV Breaker Station may be constructed.

Route Alternative 2: This route, referred to as Route 2 in the *Route Permit Application*, was proposed by the Applicants as an alternate route in their application to the Commission. This route is approximately 68 miles long and generally follows U.S. Highway 2 and the Enbridge pipeline ROWs. As with Route Alternative 1, this alternative would also entail adding 230 kV equipment to the Wilton Substation and would expand the Boswell Substation to permit the addition of 230 kV equipment.

Under this Route Alternative, the existing Cass Lake Substation would be expanded by approximately 2.2 acres to accommodate new 230kV equipment.

Route Alternative 3: This route follows existing pipeline, transmission, and road ROWs for most of its 116 miles. The route follows a series of transmission lines and roads between the Wilton Substation, northeast to the Blackduck area, east and then south to Deer River, and then southeast to the Boswell Substation. This route avoids a major gateway to the Chippewa National Forest and avoids bisecting the Leech Lake Reservation. This alternative would include improvements to the Wilton and Boswell substations, but no additional substations or breaker stations would be constructed or expanded.

Figure 2-3: Route and Segment Alternative Overview Map

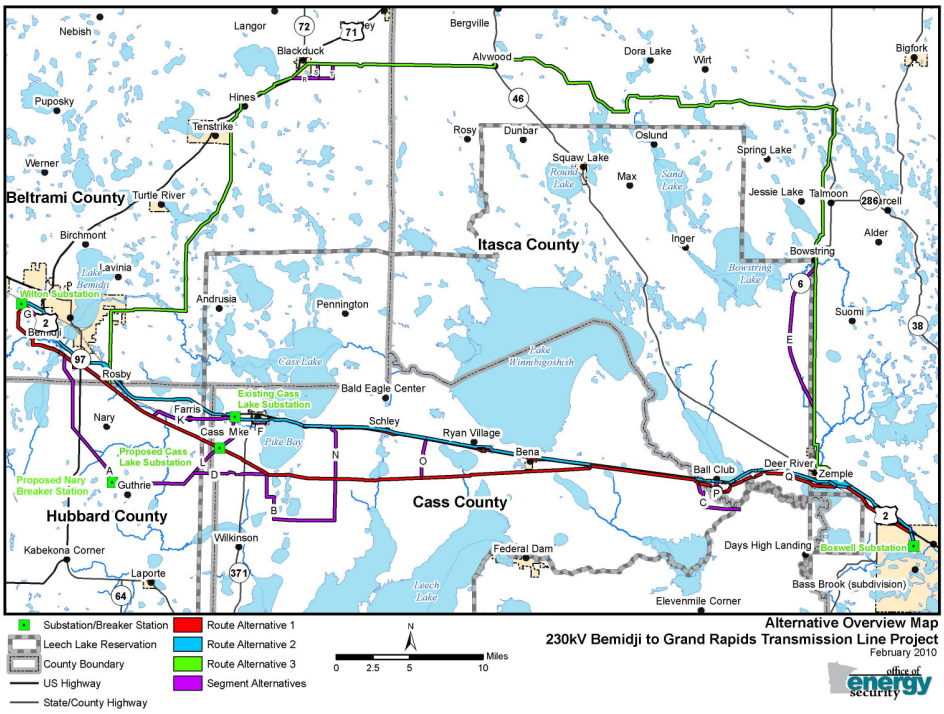

Table 2-1 provides a general comparison of the alternatives.

Table 2-1: Comparison of Route Alternatives

		No-Build Alternative	Route Alternative 1	Route Alternative 2	Route Alternative 3
Meets Identified Purpose and Need for Project		No	Yes	Yes	Yes
Route Length (miles)		N/A	69	68	116
Existing Linear Features (miles)	Transmission Lines	N/A	18	9	91
	Pipelines	N/A	61	48	8
	Highways	N/A	25	60	32
Length of new Corridor (miles)		N/A	5.2	2.6	5.1
New Corridor as a % of Route		N/A	7.5 %	3.8 %	4.4%
Cass Lake Substation		N/A	New (4 acres)	Expand (2.2 acres)	Expand (2.2 acres)
Nary Breaker Station		N/A	Yes, Depending upon Route (2.5 acres)	N/A	N/A
Wilton Substation		N/A	Add new Equipment; no expansion	Add new Equipment; no expansion	Add new Equipment; no expansion
Boswell Substation		N/A	Expand (1.3 acres)	Expand (1.3 acres)	Expand (1.3 acres)
Estimated Cost ($ million)		N/A	$62.6 – $65.3	$65.6	$99..1

In addition to the Route Alternatives, the EIS also evaluates 20 Segment Alternatives, labeled A through T and summarized in Table 2-2. Of the 20 Segment Alternatives, eight were included in the Applicants' *Route Permit Application*, and four were identified in OES's April 2009 *Environmental Report*. The additional eight Segment Alternatives, primarily in the U.S. Highway 2 area, were identified during the course of the EIS development as several areas presenting routing constraints because of engineering difficulty, areas of cultural use and environmental features were identified within the routes identified in the original scope. These Segment Alternatives were identified in OES's revised Scoping Decision, issued February 5, 2010.

Table 2-2: Segment Alternatives Evaluated in the EIS

Segment Alternative	Description (*Source*)	Associated Route Alternatives
A	Bemidji – Nary Alternative (*Route Permit Application*): A 15.7-mile segment from the Wilton Substation, follows an existing 115 kV transmission line, connecting back to Route Alternative 1 through either Segment Alternatives D or L.	1
B	Ten Section Alternative (*Route Permit Application*): A 10.5-mile segment that avoids the Ten Section area and Pike Bay Experimental Forest	1
C	Leech Lake River Crossing Alternative (*Route Permit Application*): A 4.4-mile segment that moves existing 69 kV Mississippi River crossing from U.S. Highway 2 south to Leech Lake River; new 230 kV line would use the existing crossing.	1, 2
D	143rd Street Alternative (*Route Permit Application*): A 5.0-mile segment that continues Segment Alternative A, to the west along 460th S/ 143rd Street NW.	1
E	MN Highway 6 Alternative (*Initial Scope*): A 10.6-mile segment that departs from a cross-county section of an existing 69 kV line to follow MN Highway 6	3
F	Cass Lake Alternative (*EIS Development*): A 1.3-mile segment that skirts the center of the city of Cass Lake and avoids the Superfund site by heading briefly south along MN Highway 371 and then across a CNF parcel	2
G	Bemidji Enbridge/transmission Alternative (*EIS Development*): A 1.6-mile segment that follows the Enbridge pipeline ROW and a 115 kV transmission line from the Wilton Substation to a pipeline/transmission divergence north of Division Street	2
H	Division Street Transmission Alternative (*EIS Development*): A 1.0-mile segment that follows a 115 kV from a pipeline/transmission split to Route Alternative 2.	2
I	Division Street Pipeline Alternative (*EIS Development*): A 0.5-mile segment that follows the Enbridge pipeline from a pipeline/transmission split to Route Alternative 2.	2
J	Bemidji Slough Crossover (*Route Permit Application*): A 0.4-mile segment that connects Route Alternatives 1 and 2 and avoids the Bemidji Slough WMA.	1, 2
K	Midge Lake Crossover (*EIS Development*): A 5.9-mile segment that connects Route Alternatives 1 and 2; ties into the existing Cass Lake Substation.	1, 2
L	Farden – Pike Bay Crossover (*EIS Development*): A 2.5-mile segment that connects Segment Alternative A with a new Cass Lake Substation; follows an existing 115 kV transmission line.	1
M	Pike Bay Crossover (*Route Permit Application*): A 2.4-mile segment that connects Route Alternatives 1 and 2; follows an existing 115 kV transmission line.	1, 2
N	Cuba Hill Road Crossover (*Route Permit Application*): A 3.7-mile segment that connects Route Alternatives 1 and 2 along Cuba Hill Road	1, 2
O	Sucker Bay Road Crossover (*Route Permit Application*): A 2.7-mile segment that connects Route Alternatives 1 and 2 along Sucker Bay Road	1, 2
P	Ball Club Crossover (*EIS Development*): A 0.4-mile segment that connects Route Alternatives 1 and 2	1, 2
Q	Deer River Crossover (*EIS Development*): An 0.2-mile segment that connects Route Alternatives 1 and 2	1, 2
R	Blackduck Alternative 1 (*Initial Scope*): An 1.8-mile segment that would provide an alternative in the Blackduck area.	3
S	Blackduck Alternative 2 (*Initial Scope*): A 1-mile segment in the Blackduck area that would connect Segment Alternative R with Route Alternative 3 along Beltrami County Road 311.	3
T	Blackduck Alternative 3 (*Iniital Scope*): A 2-mile segment in the Blackduck area that would connect Segment Alternative R with Route Alternative 3.	3

* Segment Alternatives A and D were combined in the Applicants' *Route Permit Application* (Otter Tail Power et al., 2008a)

2.2.1. No-Build Alternative

Under the No-Build Alternative the Project would not be constructed. No land would be used for transmission or substation facilities, and there would be no changes to the existing environment in the Study Area. As discussed in Section 2.1.1, above, the No-Build Alternative does not meet the identified purpose and need for the Project. A No-Build Alternative is evaluated in this document in accordance with the Council on Environmental Quality NEPA regulations (40 CFR 1502.14) requiring review of a no-action alternative.

2.2.2. Route Alternative 1

Route Alternative 1, shown in Figure 2.2-1, and in greater detail in the maps in Appendix C, follows the Great Lakes Gas Transmission Company (Great Lakes) pipeline ROW for approximately 61 of its 69-mile total length. The Applicants identified this as their preferred alternative in their *Route Permit Application* to the Commission. This alternative would include improvements to the Wilton and Boswell substations and construction of a new substation near Cass Lake. Depending upon the final routing, this Route Alternative may include a new Nary Breaker Station. The capital cost per mile for Route Alternative 1 is estimated at $788,000 (Otter Tail Power et al, 2008a). Including improvements to the Wilton and Boswell substations and construction of a new Cass Lake Substation, the total total capital cost of this Route Alternative is estimated at approximately $62.6 million. Construction of the Nary Breaker Station would add approximately $2.7 million to this cost.

2.2.2.1. Transmission Line Route

Route Alternative 1 proceeds south overland from the Wilton Substation, along two 69 kV transmission lines for 1.2 miles, then overland for approximately 2,000 feet, before turning southeast to follow the Great Lakes Pipeline through southern Bemidji. Aside from some slight deviations to avoid homes, the Route Alternative continues eastward along the Great Lakes Pipeline for approximately 46 miles until Mud Lake Road. Route Alternative 1 then follows Mud Lake Road north for approximately 0.2 mile, before turning east along Great River Energy's 69 kV line between the Enbridge and Great Lakes pipelines where it would cross the Mississippi River near the existing Great River Energy 69 kV transmission line crossing. After crossing the Mississippi the route would continue to parallel the pipelines and 69 kV transmission line for approximately 0.6 mile to Itasca County Road 119. At County Road 119, the route would head cross-country in a southeasterly direction to Itasca County Road 118. The route would follow County Road 118 for approximately 1,200 feet, continuing east cross country, then north for approximately 1,000 feet before turning northeast for another 2,150 feet before rejoining the Great Lakes pipeline. The route would continue to follow the Great Lakes pipeline

for approximately 10.2 miles. The route would then follow a Minnesota Power 115 kV transmission line for the remaining 4.5 miles to the Boswell Substation.

Segment Alternatives associated with this Route Alternative are:

- Segment Alternative A is a 15.7-mile alternative developed by the Applicants to collocate with an existing 115 kV transmission line from Bemidji to Cass Lake, instead of following the Great Lakes pipeline. This segment follows Otter Tail Power's Bemidji to Nary 115 kV transmission line from the Wilton Substation south for approximately 10 miles, then follows Otter Tail Power's Nary-to-Cass Lake 115 kV transmission line east and northeast for approximately 5.7 miles to the intersection of 317th Avenue and 460th Street in Hubbard County. From this point the Segment Alternative could connect with either Segment Alternatives L or D.
- Segment Alternative B was developed by the Applicants to avoid the Ten Section Area and Pike Bay Experimental Forest of the CNF. This Segment Alternative would deviate from Route Alternative 1 between the intersection of Wilkenson Road and Lupine Drive NW (Lake 13 Road) and Cuba Hill Road. The Segment Alternative would proceed south from the Wilkenson Road and Lupine Drive intersection for approximately 3.5 miles, then turn east for approximately 4 miles to Cuba Hill Road, then turn north again for approximately 3 miles before reconnecting with Route Alternative 1. The Segment Alternative would travel cross country and would not follow any existing utility ROWs, but would follow some roads.
- Segment Alternative C was developed by the Applicants to reduce the number of transmission lines that cross the Mississippi River at the preferred river crossing location near Ball Club. This alternative would replace the existing Great River Energy 69 kV line crossing the Mississippi River with the proposed 230 kV transmission line. Great River Energy's 69 kV line would be re-routed to the south along approximately 4.4 miles of new ROW to cross the Leech Lake River. If this Segment Alternative is used, the crossing of the Mississippi River would be similar to what exists there currently, one set of structures, although the structures would be taller.
- Segment Alternative D would connect with Segment Alternative A and proceed for approximately 5 miles east along 460th Street. Use of this segment would preclude connecting the Project to a Cass Lake Substation.
- Segment Alternative J is a 0.4-mile segment connecting Route Alternatives 1 and 2. This segment would avoid the Bemidji Slough Wildlife Management Area.
- Segment Alternative K is a 5.9-mile segment connecting Route Alternatives 1 and 2 between approximately Hubbard County Road 15 and the existing Cass Lake Substation.
- Segment Alternative L is a 2.5-mile segment connecting Segment Alternative A with Route Alternative 1 along Otter Tail Power Company's Nary–to-Cass Lake 115 kV transmission line. This segment would terminate at a new Cass Lake Substation that would be located in Pike Bay Township.

- Segment Alternative M is a 2.4-mile segment connecting Route Alternatives 1 and 2 along the Otter Tail Power Company's Nary-to-Cass Lake 115 kV transmission line.
- Segment Alternative N is a 3.7-mile segment connecting Route Alternatives 1 and 2 along Cuba Hill Road.
- Segment Alternative O is a 2.7-mile segment connecting Route Alternatives 1 and 2 along Sucker Bay Road.
- Segment Alternative P is a 0.4-mile segment connecting Route Alternatives 1 and 2 across U.S. Highway 2 between the Mississippi River and Ball Club Lake.
- Segment Alternative Q is a 0.2-mile segment connecting Route Alternatives 1 and 2 east of Deer River.

Under Route Alternative 1, there are three scenarios for crossing the Mississippi River near Ball Club:

- Route Alternative 1 could cross the river and on a separate ROW parallel to the existing Great River Energy 69 kV crossing. This would result in two crossings to the Mississippi River, essentially adjacent to one another;
- Route Alternative 1 could be consolidated with Great River Energy's existing 69 kV transmission line on a new set of double circuit structures. Under this scenario, there would be one set of structures and two planes of wire crossing the river; and
- If this Route Alternative is used in conjunction with Segment Alternative C (see above), a new set of structures would replace the existing river crossing and Great River Energy's 69 kV transmission line would be relocated along a new ROW to cross the Leech Lake River.

2.2.2.2. Substation Improvements

Substation improvements and construction included with this alternative are described in greater detail in Section 2.4.2. This alternative would include the addition of equipment to both the Wilton and Boswell substations. The improvements at the Wilton Substation would occur within the existing fenced area of the substation. The Boswell Substation would be expanded by approximately 1.3 acres to accommodate the additional equipment.

Route Alternative 1 would also include construction of a new 230/115 kV substation in Section 30 of Pike Bay Township (Township 145N, Range 31W) in Cass County where the Alternative crosses the existing 115 kV transmission line between the Nary Junction and Cass Lake substations. This crossing point is approximately 2.5 miles south of the existing Cass Lake 115/69 kV Substation.

When Segment Alternatives A is used in conjunction with Route Alternative 1, a new Nary 115 kV breaker station would be constructed to provide enhanced transmission security and reliability to address reliability concerns of double circuiting of the portion

of existing 115 kV transmission line and the Project between Bemidji and Cass Lake. Building this 115 kV breaker station would sectionalize the 115 kV circuits serving Bemidji, Cass Lake, Akeley, and Badoura. It would also provide for back-up (redundant) transmission in the event of an outage of the proposed 230/115 kV double-circuit transmission line.

2.2.3. Route Alternative 2

Route Alternative 2, shown in Figure 3.2-1 and in the detailed maps in Appendix C, generally follows U.S. Highway 2 and the Enbridge pipeline ROWs across the LLR. This route was identified as an alternative route in the *Route Permit Application* to the Commission. The capital cost per mile for this Route Alternative is estimated at $851,000 (Otter Tail Power et al, 2008a). Including improvements to the Wilton and Boswell substations and the expansion of the existing Cass Lake Substation, the total total capital cost of this Route Alternative is estimated at approximately $65.6 million.

2.2.3.1. Transmission Route

Route Alternative 2 proceeds east from the Wilton Substation along a new corridor for approximately 2,200 feet before turning southeast along the railway to the U.S. Highway 2/U.S. Highway 71 corridor. The route then turns south along U.S. Highway 2/U.S. Highway 71 for approximately 15.5 miles and an Otter Tail Power 69 kV transmission line before turning south along the 69 kV transmission line to the Cass Lake Substation. From the Cass Lake Substation, the route would continue east along the BNSF railway and Enbridge pipeline, passing through the south side of the city of Cass Lake and continuing east along U.S. Highway 2 between Pike Bay and Cass Lake, south of Lake Winnibigoshish and through Bena. The route would cross the Mississippi River north of U.S. Highway 2, continuing east along the highway past Ball Club. The route would cross U.S. Highway 2 east of Cedar Road to follow the Enbridge pipeline. The route then would continue east along the pipeline through Zemple, heading southeast for approximately 0.6 mile along the BNSF railroad, then eastward for approximately 0.7 mile along the Great Lakes pipeline to Itasca County Road 11. From this point it would follow U.S. Highway 2 southeast for approximately 2 miles, breaking off to follow the Great Lakes Pipeline north of U.S. Highway 2 for approximately 3.6 miles, crossing back to the south side of U.S. Highway 2, and following Minnesota Power's 115 kV transmission line into the Boswell Substation.

Segment Alternatives associated with this Route Alternative are:

- Segment Alternative C was developed by the Applicants to reduce the number of transmission lines that cross the Mississippi River at the preferred river crossing location near Ball Club. This alternative would replace the existing Great River Energy 69 kV line crossing the Mississippi River with the proposed 230 kV transmission line. Great River Energy's 69 kV line would be re-routed to the

south along approximately 4.4 miles of new ROW to cross the Leech Lake River. If this Segment Alternative is used, the crossing of the Mississippi River would be similar to what exists there currently, one set of structures, although the structures would be taller.

- Segment Alternative F is a 1.3-mile segment that would provide an alternative route through Cass Lake between MN Highway 371 and Pike Bay. The segment would deviate from Route Alternative 2 by heading south along MN Highway 371, then east across a CNF parcel.
- Segment Alternative G is a 1.6-mile segment in the Bemidji area that follows the Enbridge pipeline ROW and a 115 kV transmission line from the Wilton Substation to the point where the pipeline and transmission line diverge north of Division Street.
- Segment Alternative H is a 1-mile segment that could connect Segment Alternative G with Route Alternative 2 along the same 115 kV transmission line followed by Segment Alternative G.
- Segment Alternative I is a 0.5-mile segment connecting Segment Alternative G with Route Alternative 2 parallel to the Enbridge pipeline.
- Segment Alternative J is a 0.4-mile segment connecting Route Alternatives 1 and 2. This segment would avoid the Bemidji Slough Wildlife Management Area.
- Segment Alternative K is a 5.9-mile segment connecting Route Alternatives 1 and 2 between approximately Hubbard County Road 15 and the existing Cass Lake Substation.
- Segment Alternative M is a 2.4-mile segment connecting Route Alternatives 1 and 2 along the Otter Tail Power Company's Nary-to-Cass Lake 115 kV transmission line.
- Segment Alternative N is a 3.7-mile segment connecting Route Alternatives 1 and 2 along Cuba Hill Road.
- Segment Alternative O is a 2.7-mile segment connecting Route Alternatives 1 and 2 along Sucker Bay Road.
- Segment Alternative P is a 0.4-mile segment connecting Route Alternatives 1 and 2 across U.S. Highway 2 between the Mississippi River and Ball Club Lake.
- Segment Alternative Q is a 0.2-mile segment connecting Route Alternatives 1 and 2 east of Deer River.

Under this Route Alternative there are two scenarios for crossing the Mississippi River near Ball Club:

- Route Alternative 2 could cross the Mississippi River near Ball Club at a new crossing north of U.S. Highway 2. The existing Great River Energy 69 kV line would remain in place. Under this Route Alternative there would be two transmission lines crossing the river near Ball Club, the Project on the north side of U.S. Highway 2 and the existing Great River Energy 69 kV transmission line south of U.S. Highway 2.
- When this Route Alternative is used in conjunction with Segment Alternative C (see above), a new set of structures would replace the existing river crossing and

Great River Energy's 69 kV transmission line would be relocated along a new ROW to cross the Leech Lake River.

2.2.3.2. Substation Improvements

Substation improvements and construction included in this alternative are described in greater detail in Section 2.4.2. This alternative would include the addition of equipment to the Wilton and Boswell substations. The improvements at the Wilton Substation would occur within the existing fenced area of the substation. The Boswell Substation would be expanded by approximately 1.3 acres to accommodate the additional equipment. Under this alternative, the existing Cass Lake 115/69 kV substation, located in Section 17 of Pike Bay Township (Township 145N, Range 31W) in Cass County, would be expanded by approximately 2.2 acres to accommodate new 230 kV equipment.

2.2.4. Route Alternative 3

Route Alternative 3 follows existing pipeline, transmission, and road ROWs for 111 of its 116 miles. The route heads southeast out of the Wilton Substation, then northeast to the Blackduck area. There are several route variations around the city of Blackduck. From Blackduck, the route heads east and then south to Deer River, and then southeast to the Boswell Substation. This alternative skirts the Leech Lake Reservation. While it does not avoid the CNF, it avoids the U.S. Highway 2 area, which the CNF considers to be a major gateway to the CNF. As with Route Alternatives 1 and 2, this alternative includes improvements to the Wilton and Boswell substations. This alternative would not include any improvements to the transmission system in the Cass Lake area. The capital cost per mile for this Route Alternative is estimated at $833,000 (OES, 2009). Including improvements to the Wilton and Boswell substations, the total total capital cost of this Route Alternative is estimated at approximately $99.1 million

2.2.4.1. Transmission Route

Route Alternative 3 would follow the same route as Route Alternative 1 for the first 10 miles between the Wilton Substation and North Plantagent Road SE in the Bemidji area. From this point the route would veer north, crossing U.S. Highway 2 and the exit to Paul Bunyan Drive SE. The route then would follow an existing 69 kV transmission line to the northeast between Bemidji and Blackduck. Although some portions of the 69 kV transmission line are cross-country, the route generally parallels Tyler Avenue, east along Power Dam Road, north along Parker's Lake Road NE, and then northeast along Long Lake Drive NE/Marcella Drive NE, 3 Culverts Road, and Carter Lake Road/Forest Road 2419. The route would deviate slightly from the existing 69 kV route, crossing and then rejoining the 69 kV transmission line, briefly following Beltrami County Road 31 before crossing U.S. Highway 71. The route would continue along the north side of U.S. Highway 71 until south of Blackduck, where it would cross U.S. Highway 71 and

parallel the Blue Ox Trail northeast before turning eastward along Summit Avenue/Beltrami County Road 30. The route would continue east along Alvwood Road (i.e., Beltrami County Road 30/Itasaca County Road 13). At MN Highway 46, the route would follow an existing 69 kV transmission line, jogging briefly north along MN Highway 46 before continuing east along Itasca County Road 29. The route would continue to follow the 69 kV transmission line east and southeast, crossing the Bowstring River, past Whitefish Lake, until crossing MN Highway 6. The route would then head south, cross-country along a 69 kV transmission line along, roughly parallel to MN Highway 6, before continuing directly south away from the highway for approximately 10 miles through a forested wetland as MN Highway 6 jogs west to avoid the area. The Route Alternative would re-join MN Highway 6 just south of County Road 172 and continue south to Deer River. The route, following an existing 69 kV transmission line, would pass through Deer River on the east, then jog to the east and southeast before joining a 115 kV transmission line north of U.S. Highway 2. From this point the route would follow a 115 kV transmission line east then south across U.S. Highway 2 where it would follow Route Alternative 1 into the Boswell Substation along Minnesota Power's 115 kV transmission line.

Segment Alternatives associated with this Route Alternative are:

- Segment Alternative E is a 10.6-mile segment that would depart from a cross-country section of an existing 69 kV line to follow MN Highway 6.
- Segment Alternative R is a 1.8-mile segment that would provide an alternative in the Blackduck area. This segment would cross U.S. Highway 71 and head eastward overland and then along Forest Road 3415/Beighley Road NE until Beltrami County Road 311.
- Segment Alternative S is a 1-mile segment in the Blackduck area that would connect Segment Alternative R with Route Alternative 3 along Beltrami County Road 311.
- Segment Alternative T is a 2-mile segment in the Blackduck area that would connect Segment Alternative R with Route Alternative 3. This segment would continue eastward along Forest Road 3415/Beighley Road NE from Beltrami County Road 311 for approximately 1 mile and then turn north overland and then along Wernberg Road NE before connecting with Route Alternative 3 along Beltrami County 30.

2.2.4.2. Substation Improvements

Substation improvements and construction included in this alternative are described in greater detail in Section 2.4.2. This alternative would include the addition of equipment to the Wilton and Boswell substations. The improvements to the Wilton Substation would occur within the existing fenced area of the substation. The Boswell Substation would be expanded by approximately 1.3 acres to accommodate the additional equipment. There would be no substation or other improvements to the Cass Lake area under this alternative.

2.3. Alternatives Considered but Not Evaluated

In addition to the alternatives identified in Section 2.2, several alternatives to the Project were considered but were not included in the detailed evaluation presented in this EIS for various reasons.

2.3.1. New Generation Alternative

Both the Certificate of Need process and the *Alternatives Evaluation Study* prepared under the RUS scoping process evaluated a new generation alternative to the Project. Because of the limited transmission capacity for importing energy from other regional generation resources, only dispatchable (i.e., readily available on demand) generation could serve as a replacement to the proposed Project. Intermittent resources, such as wind generation, would not be feasible stand-alone solutions because they are not readily available on demand.

Generators typically have availability in the range of 85 to 95 percent, compared to a 99.9 percent availability factor for a new transmission line. Because of these differences, a generation alternative would have to incorporate a higher rated capacity than the anticipated 76 MW deficit by 2011-2012 noted in planning materials to allow for down time as well as expected load growth beyond that date. This generation could be located at a single site, or at a number of smaller sites disbursed throughout the area.

The Applicants identified two generation scenarios:

- Central Station Alternative: installation of a 180 MW natural gas-fired power plant comprised of three 60 MW gas-fired combustion turbines. The capital cost of this alternative is assumed to be $700/kW, or approximately $126 million.
- Distributed Generation Alternative: installation of 110 MW disbursed across 11 sites. It is anticipated that each 10 MW generation site would be comprised of between five and seven 1.5- to 2-MW diesel or natural gas generators for a total of 55 to 77 individual generators. The capital cost for this alternative is assumed to be approximately $7.65 million for each of the 11 sites, or approximately $84.15 million in total for the 11 sites.

These two generation scenarios were evaluated in the *Environmental Report* prepared under the Certificate of Need docket for the Project.

Adding new generation into a generation-rich area, such as the North Dakota Export (NDEX) boundary where the Project is proposed, requires either displacement of existing generation within the area or increasing the transmission outlet capability to allow continued operation of the existing generation. The existing generation within this boundary is very heavily weighted toward low-cost baseload coal (lignite) and

hydroelectric facilities. Because of the cost differential between the existing baseload facilities and the higher cost generators in this alternative, displacement of these sources would increase total system production costs. Because the NDEX boundary is a power transfer-limited interface, adding new generation within its boundaries would require transmission additions to increase the existing generation outlet capability. It is assumed that increased transmission of a length and voltage similar to the Project would be required to support the new generation supplied in the central station alternative.

The distributed generation alternative also faces transmission constraints, as noted in the *Dispersed Renewable Generation Transmission Study* released by the Department of Commerce in July 2008. That study assessed the potential for installing 600 MW of dispersed renewable generation throughout Minnesota in a way that produced minimal impacts on the transmission system. The analysis demonstrated a dispersed renewable generation potential scenario where 600 MW could be sited without significantly affecting any transmission infrastructure. That analysis found that the potential for integrating distributed generation into northern Minnesota was constrained by the existing transmission infrastructure. The study identified a potential for up to 40 MW of distributed generation in the Cloquet area, the only northern Minnesota site identified. In contrast, that study identified the potential for approximately 300 MW of distributed renewable generation in southeastern Minnesota and approximately 160 MW of potential in southwestern Minnesota. Based upon this assessment of transmission potential for distributed generation, it would appear that the distributed generation alternative would also require the addition of transmission to be viable.

It is assumed that the new transmission facilities required for this alternative would be of a similar size and in a similar location to the Project. Because the new transmission lines constructed under this alternative would negate any benefit of a generation alternative over the Project, this alternative was not carried forward for further analysis in the EIS.

2.3.2. Transmission System Alternative

The Applicants identified three transmission alternatives to the Project:

- Adding a second Winger-Wilton 230 kV transmission line on separate structures from the existing 230 kV line (53 miles, with two substation upgrades);
- Adding a Badoura–Wilton 230 kV transmission line on separate structures from the existing 115 kV line (48 miles, with two substation upgrades); and
- A rebuild of two existing 115 kV transmission lines, Badoura–Wilton and Winger–Wilton, (100 miles, with five substation upgrades).

Both the Certificate of Need process and the *Alternatives Evaluation Study* prepared under the RUS scoping process evaluated these transmission system alternatives. The rebuild of existing transmission lines would result in voltage collapse in the event of a Wilton-Winger and Badoura-LaPorte outage. All of the transmission alternatives show

inferior electric performance and cost-to-benefit profile compared to the Project. Any of the transmission alternatives would require additional load-serving improvements in the Study Area sooner than the 10- to 15-year window provided by the Project.

2.3.3. Additional Route Alternatives

During the scoping period five route alternatives were considered for inclusion in the EIS. In addition to Route Alternatives 1, 2, and 3 identified in Section 2.2, two additional route alternatives were identified but rejected from further consideration. These alternatives are shown in Figure 2-2, and described below (see also the *Scoping Report/Decision* in Appendix A).

2.3.3.1. Route Alternative 4 (Southern Route)

This Route Alternative would generally follow a pipeline southeast out of the Wilton Substation before turning south following a 115 kV transmission line and MN Highway 4 for several miles. North of Akeley, the route would head east, jogging generally east until reaching MN Highway 200. The route would then generally follow MN Highway 200 to the Remer area before skirting Remer to the north and then generally following MN Highway 6 northeast before turning into the Boswell Substation.

Approximately 11.5 miles of the total 100-mile length of this Route Alternative did not follow existing ROWs associated with other transmission lines, pipelines, roads, or railroads. This Route Alternative was eliminated from further consideration in the EIS process because it did not avoid the LLR or the CNF. Route Alternative 4 has potential for high scenic impacts and, due to the extent of new ROW, would likely have greater wetland impacts than Route Alternative 3.

2.3.3.2. Route Alternative 5 (non-CNF Route)

As with Route Alternative 4, this route would generally follow a pipeline southeast out of the Wilton Substation before turning south, following a 115 kV transmission line and MN Highway 4 for several miles, before turning east and following a series of county roads, 69 kV transmission lines, and overland passages. The Route Alternative would then turn north, eventually following the same route as Route Alternative 4 along MN Highway 6 to the northeast and turning into the Boswell Substation.

Approximately 29 miles of the total 126-mile length of this Route Alternative does not follow existing ROWs associated with other transmission lines, pipelines, roads, or railroads. This alternative has the greatest amount of new corridor of all of the route alternatives reviewed. This route was eliminated from further consideration in the EIS process because it could impact the greatest number of wetlands, including forested

wetlands, required the greatest amount of acres to be cleared due to its length, and had the greatest length of new corridor of all the Route Alternatives reviewed.

2.3.4. Underground Transmission Line Alternative

Undergrounding of transmission lines similar in size to the 230 kV Project is seldom used because of the significant construction, operation, and maintenance issues, and the resulting cost. Undergrounding of electric utility infrastructure is a technically feasible option, especially for lower voltage distribution lines. It is common today to see lower-voltage distribution lines that connect to homes and businesses buried directly in the ground using less invasive construction methods. In the case of distribution lines, undergrounding offers aesthetic and environmental benefits while posing relatively few construction, maintenance, and operations challenges.

However, the complexity and cost of undergrounding increases as the voltage increases. As a result, undergrounding is seldom used for transmission facilities of the size of the Project. An OES review of *Route Permit Application* for the Project and other proposed high voltage transmission lines, showed that the cost for underground construction has been between five and 15 times greater than the cost for a similar overhead transmission line. The cost for underground construction depends upon a variety of factors specific to the project, but represents the more complicated engineering, increased construction time, specialized material, and specialized labor requirements.

The Applicants have estimated the cost for the Project to be $675,000 to $915,000 per mile in 2007 dollars (OES, 2009). The estimated cost range for the same voltage line to be placed underground is $10 to $15 million per mile. This cost range for an underground line does not include the cost for substations, with the large inductors that are necessary approximately every 20 miles to counteract the greater line charging currents associated with undergrounding. In addition, there are increased line losses and maintenance expenses incurred throughout the useful life of an underground line that makes its cost versus an overhead line even greater (Otter Tail Power et al., 2008a).

Because of the significantly greater expense, installation of underground transmission has been limited to locations where physical circumstances allow no other option or where overhead construction is prohibited. Examples include congested downtown centers where there is no space available between city streets and adjacent buildings for adequate clearance.

While underground lines reduce visual impacts (other than at the overhead/underground transition locations) and may minimize surface impacts after construction, there are distinct environmental consequences. The predominant environmental impact from the construction, operation, and maintenance of underground transmission lines arises from the need to develop and maintain a ROW totally cleared of woody vegetation. The construction activities for an overhead transmission line, discussed in greater detail in Section 2.4, are typically concentrated

around the line's structures, with the areas between structures left relatively undisturbed except for the removal of trees that could interfere with the energized conductors. A narrow pathway between structures is often all that is necessary to string the conductors. With underground construction, however, the entire ROW must be cleared for construction activities along the entire length of the corridor. This increases impacts to wetland areas due to the installation of access roads capable of supporting heavy construction equipment, trenching activities, and cable installation. These wetland impacts would be permanent if a drivable road were constructed to allow quick access to repair the underground line in the event of an incident taking it out of service.

Underground lines also present challenging reliability and service issues. While overhead lines are subject to more frequent outages than underground cables, service is usually quickly restored by the automatic re-closing of circuit breakers, resulting in only a momentary outage of the transmission line. The lower incidence of outages with underground cables is offset by the fact that the outages are much longer. This is because re-closing circuit breakers is not recommended until it is verified that there is no fault in the underground cable (Otter Tail Power et al., 2008a).

Restoration of a faulted underground line also takes much longer due to the difficulty in locating the fault and accessing the site to make repairs. Repairing failures in high voltage extruded dielectric cables is typically not done. Instead, the cable is completely replaced between man-hole splice points that are generally located every 1,500 to 2,000 feet along the cable. This is expensive and very time consuming, with restoration taking several weeks or longer depending upon the location and difficulty of access. Replacing cable involves bringing in heavy equipment, including cable reels weighing 30,000 to 40,000 pounds, during all seasons of the year. If the failure is in a splice, it may be feasible to make a repair at the splice location without having to replace large quantities of cable, but access is still required for equipment and personnel. If the fault occurs in a wetland area where all-season roads are not maintained, restoration can be further delayed as matting is installed to gain access to the manholes used to replace the failed cable (Otter Tail Power et al., 2008a).

2.4. Project Description

Final engineering and design for the Project would not be completed until a Route has been selected. Route Alternatives are described in Section 2.2. The Applicants have requested a 125-foot wide ROW for the Project. The Applicants also have requested a wider route, 1,000 feet in most areas, within which a ROW of up to 125 feet would be located, in order to design the Project around existing constraints (e.g., buildings, roads, railroads, pipelines, and other existing infrastructure). Sections 2.4.5 provides a detailed discussion about the construction methods that would be used.

As described in Section 2.4.1, the Applicants propose to use two-pole, H-frame structures for a majority of the Project length and single-pole structures in more congested areas. The preferred design would utilize either three-pole guyed structures

or single-pole self supporting structures at angle locations. At soft ground locations, the two-pole tangent (in-line) H-frame structures may also be guyed. In rare instances, single-pole structures may have to be guyed as well. In addition to the transmission line, the Project would also include installation of new equipment in the Wilton and Boswell substations. Details about the substation design are provided in Section 2.4.2 below. Depending upon the Route Alternative, the Project may also either expand the existing Cass Lake Substation or would involve constructing a new substation in the Cass Lake area.

2.4.1. Transmission Design

The Applicants have proposed using a variety of transmission structure types to address topographic and other considerations present within the Project Study Area. Characteristics of these different structure types are summarized in Table 2-3.

Table 2-3: Proposed Structure Types

Line Type	Structure Type	Structure Material	ROW Width (feet)	Structure Height (feet)	Pole Diameter (inches)	Distance Between Poles (feet)	Span Between Structures (feet)
230 kV Single-Circuit	Single-pole Davit Arm	Steel	125	80 - 100	54 - 72	N/A	400 - 800
	2-pole H-Frame	Wood	125	70 - 90	24 – 36	19.5	600 – 1,000
	3-pole Corner	Wood	125 + guy easement	70 - 90	24 – 36	28	600 – 1,000
230 /115 kV Double-Circuit	Single-pole Davit Arm	Steel	125	95 - 115	72 - 96	N/A	350 - 700
	2-pole H-frame	Wood	125	90 - 125	24 – 36	19.5	400 - 800
230 /69 kV Double-Circuit	Single-pole Davit Arm	Steel	125	95 - 115	72 - 96	N/A	350 - 700

Note: N/A = not applicable

The Applicants propose to construct single-circuit portions of the transmission line using predominantly H-frame 230 kV structures (Figure 2-4). These structures are frequently used in the type of wooded, rugged topography with wetlands typical of much of the Project Study Area. The H-frame structures would be approximately 70 to 90 feet high, with spans of approximately 600 to 1,000 feet between structures. The two poles would be set approximately 20 feet apart in holes augured to a depth of approximately 10 to 15 feet and a diameter of 24 to 36 inches. After the poles are embedded, the holes would then be backfilled with native soils or granular material.

Single-pole self-supporting structures (Figure 2-5) are proposed by the Applicants for single-circuit portions of the transmission line in areas where the available width of the ROW is limited by existing infrastructure or development. The height of single-pole single-circuit structures would range from approximately 80 to 100 feet, with the span between structures of approximately 400 to 800 feet. Corner structures would either be on reinforced concrete drilled shaft foundations or would be directly embedded with guy wires, depending upon soil types and route angles (Figure 2-6). Either single or multiple pole structures may be utilized as angle structures. Angle structures on reinforced concrete drilled shaft foundations would be contained within a 125-foot ROW, while additional easement widths, typically 20 by 70 feet, may be necessary for guyed angle structures.

For any double-circuit portions of the Project, the Applicants propose to use either single-pole self supporting structures (Figure 2-7) or double-circuit H-frame structures (Figure 2-8). These structures would either be directly embedded or set on reinforced concrete drilled shaft foundations. Double-circuit single-pole structures would range in height from approximately 95 to 115 feet, with approximately 350- to 700-foot spans between structures. Double-circuit H-frame structures would range in height between approximately 90 and 125 feet, with a span of approximately 400 to 800 feet between structures.

If steel structures are used, the finish could be galvinaized steel, which would provide a shiny appearance, or Cor-ten,sometimes referred to as self-weathering, which would use an outer coating to retard normal weathering and have a brown, rusty appearance.

For each phase of the 230 kV circuit, the Applicants propose 954 kcmil aluminum conductor steel reinforced (ACSR). The Applicants propose to use 3/8-inch diameter extra high strength steel and fiber optic ground wire for the shield wires.

Figure 2-4: Typical 230 kV H-Frame

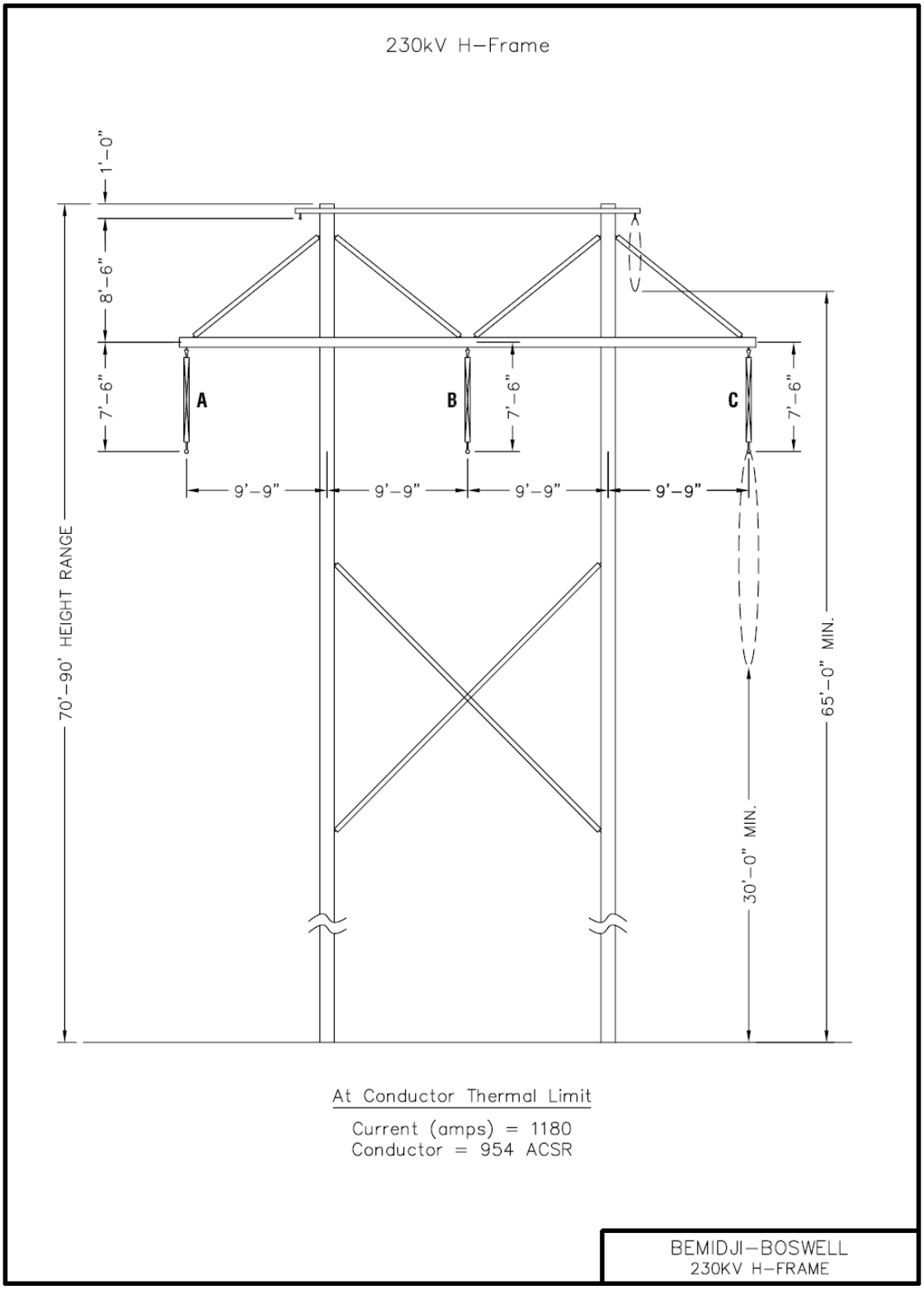

Figure 2-5: Typical 230 kV Single-Pole Structure

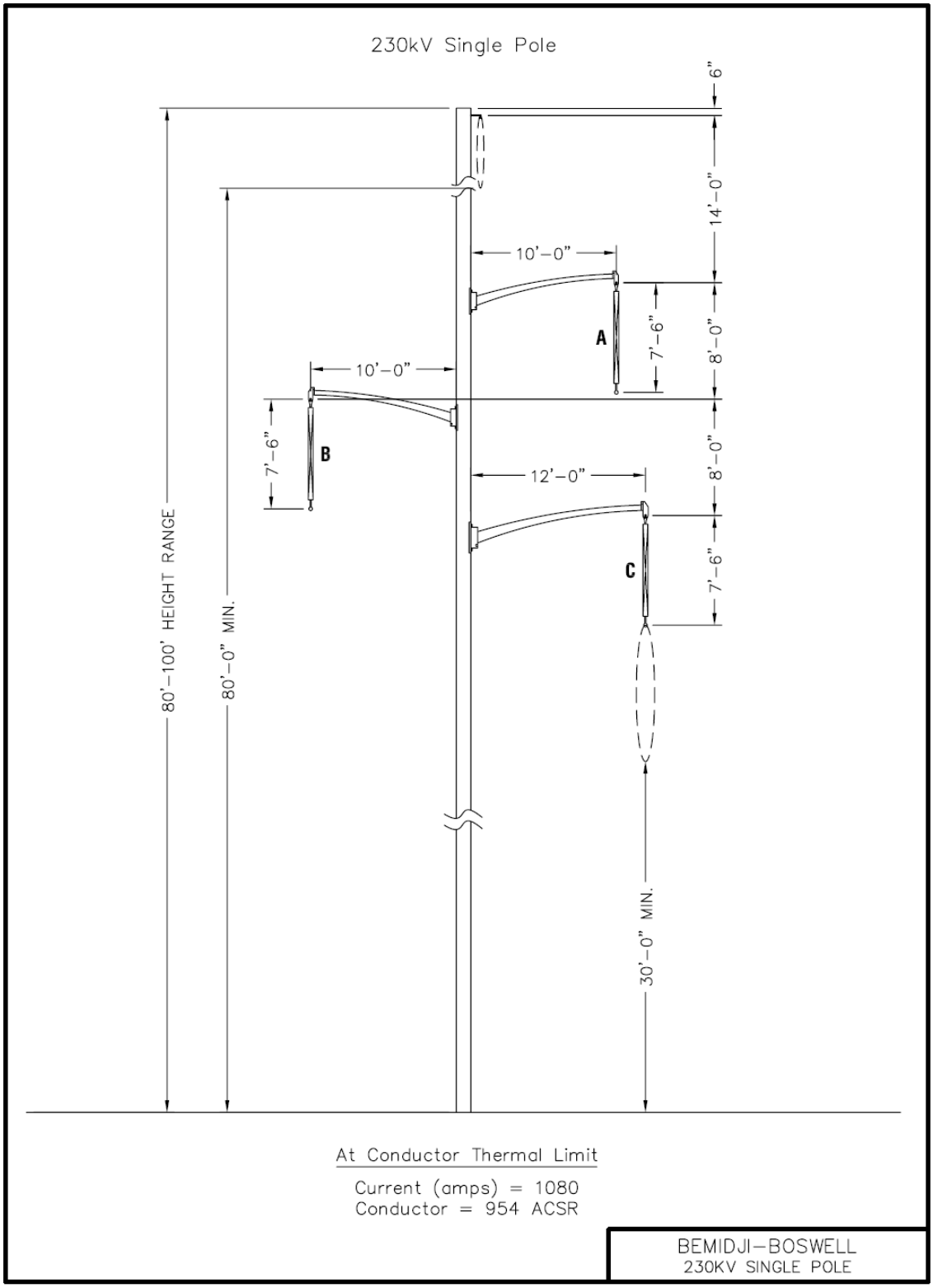

Figure 2-6: Typical 3-Pole Guyed Structure

Figure 2-3 Typical 230 kV Three Pole Dead-End

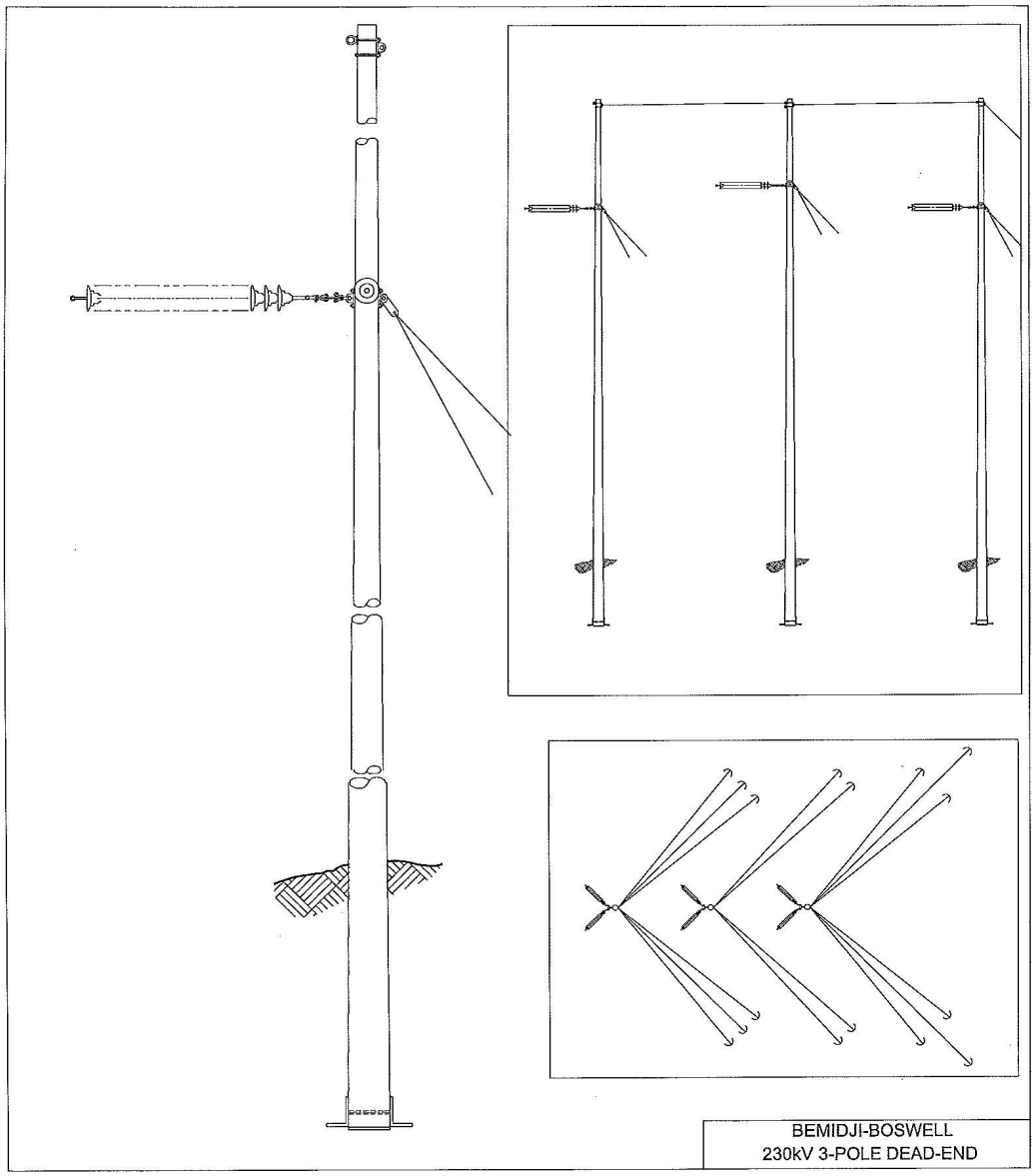

Figure 2-7: Typical 230/115 kV Single-Pole Double-Circuit Structure

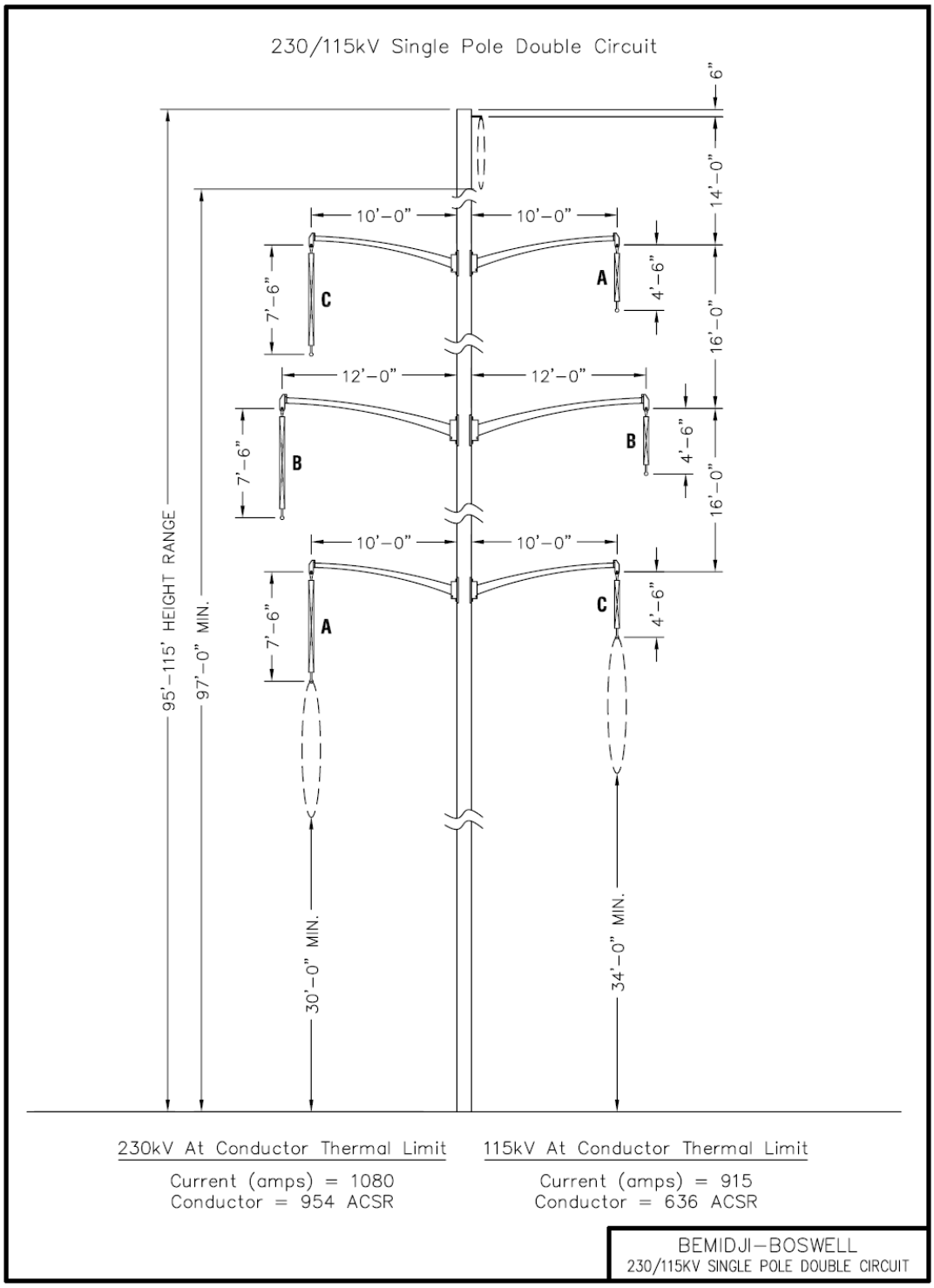

Figure 2-8: H-Frame 230-115/69 kV Structure

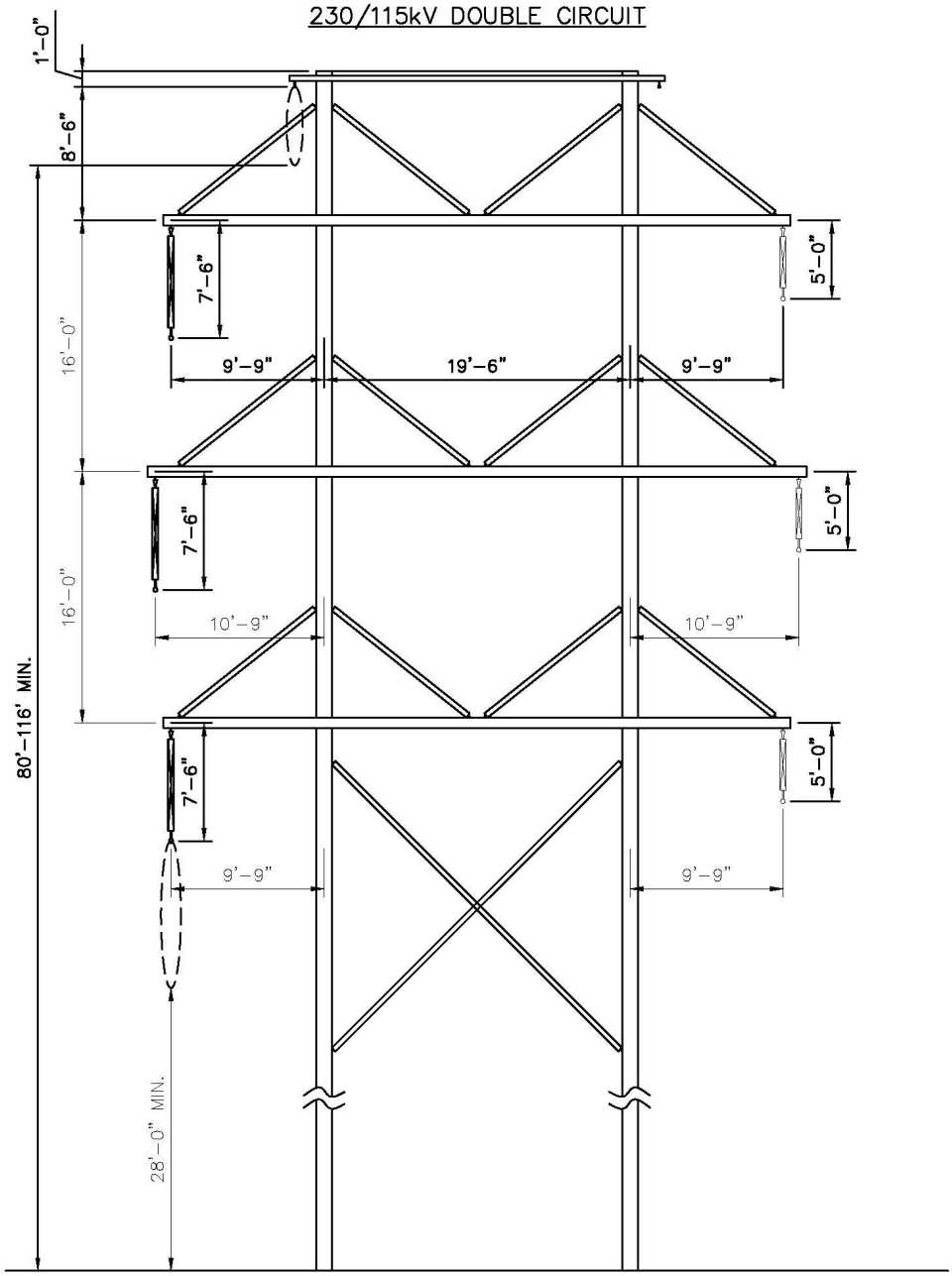

2.4.2. Substation Design

The Project would require modifications to the Wilton Substation near Bemidji and the Boswell Substation near Grand Rapids. Without reinforcing the Cass Lake area system, certain contingencies on the transmission system would still result in the Cass Lake area being separated from the Bemidji-Grand Rapids Line source at the Wilton Substation. The Applicants have already undertaken certain improvements to the transmission system in the Cass Lake area which should address the situation in the short-term. Depending upon routing and double-circuit determinations, a new or expanded substation in the Cass Lake area and breaker station at Nary Junction may also be required, as addressed in Sections 2.4.2.3 and 2.4.2.4. Impacts from the substation improvements are discussed in Section 3. Schemtics of the substation improvements are shown in Appendix H.

2.4.2.1. Wilton Substation

Project modification of the existing Wilton 230 kV Substation would not require physical expansion beyond the limits of the existing fenced perimeter. The Wilton Substation is located in a rural area east of Bemidji. Two new 230 kV breakers and a line termination structure would be added as a result of the Project, along with modifications to the existing 230 kV buses and relay panels. The Project would also require completion of a new ring bus section, as well as five new 230 kV switches with foundations, steel structures, and control panels. All of the proposed improvements would be similar in size to existing structures; changes to height and visibility are not anticipated.

2.4.2.2. Boswell Substation

The Project would require expanding the existing Boswell 230 kV Substation by approximately 1.3 acres. The Boswell 230 kV Substation is part of the Boswell Generation Plant and is located on land owned by Minnesota Power; no land procurement is required to accommodate the expansion. The land use at the substation site is industrial, in keeping with its location near the Boswell Generation Plant. The substation additions for the Project would be very similar to the existing Boswell 230 kV Substation. The design would have a similar footprint and height. The following modifications are proposed: 230 kV buses and relay panels; a new 230 kV breaker; and a half bay would be added to the substation. This would involve installing two new 230 kV circuit breakers and 230 kV dead-end structures, a new 230 kV bus, five new 230 kV switches, and associated foundations, steel structures, and control panels. The Boswell Plant and property is on a private road (a section of old MN Highway 6 now owned by Minnesota Power) about 0.75 mile from U.S. Highway 2 and no change in public visibility is anticipated.

2.4.2.3. New or Expanded Substation in the Cass Lake Area

Under Route Alternative 1 (Figure 2.2-1), a new 230 kV substation would be constructed near Cass Lake (Figure 2.2-1b). The new substation would be designed and constructed with a 230 kV three-breaker ring bus with 230 kV line switches. The facility would include a 230/115 kV transformer of approximately 187 MVA that steps down the voltage to a 115 kV three-breaker ring bus to reliably establish a connection to the existing Nary Junction–Cass Lake 115 kV line. The new substation would also require a control house, relay panels, foundations, steel structures, and switches. The substation yard would be approximately 500 by 500 feet of fenced yard and would require access roads. The cost for equipment and construction is estimated to be $5.5 million. Potential locations for a new substation are identified in Section 2.2.

Under Route Alternative 2, the existing Cass Lake 115/69 kV Substation, located in Section 17 of Pike Bay Township (Township 145N, Range 31W) in Cass County, would be upgraded and expanded to include to 230 kV capability. The existing substation would be expanded approximately 320 feet to the west on land currently owned by Otter Tail Power Company. The estimated substation expansion area is approximately 2.2 acres. The new 230 kV equipment would include a 230 kV three-breaker ring bus with line switches, a new 230/115 kV transformer (~187 MVA), and associated 115 kV facilities to integrate this transformer into the existing equipment. It is expected that a new 115 kV four-breaker ring bus with switches would be installed to connect into the 115 kV line back to the Nary Junction, up to the 115 kV line serving Enbridge pumping station load, and into the existing 115/69 kV transformer. Due to the addition of new 230 kV equipment and associated protection facilities, the substation would require a new control house, relay panels, foundations, steel structures, and switches. The existing substation would remain energized during and after the expansion to serve local loads. The estimated cost of the equipment and construction is $5 million.

Under the No-Build Alternative and Alternative 3, no improvements to the load serving capability in the Cass Lake area and no new substation or substation improvements would occur. If Segment Alternatives A and D are used in conjunction with Route Alternative 1, there would be no substation expansion or construction in the Cass Lake area.

2.4.2.4. Nary Breaker Station

If Segment Alternative A is used, a new Nary 115 kV breaker station would be located adjacent to the existing Nary Switch, at the intersection between the existing Nary to Cass Lake 115 kV, the Bemidji to Nary 115 kV, and the Nary to LaPorte 115 kV transmission lines (Guthrie Township, T144N, R33W). The Nary 115 kV Breaker Station would be located on a site of approximately 2.5 acres and consist of a fenced area of approximately 225 by 225 feet, with an additional cleared area of approximately 100 feet around the perimeter. The breaker station would consist of three 115 kV circuit breakers and associated switches, communications, relay and control equipment, three 115 kV

line termination structures, and a control house. An improved access road and small parking lot would also be required to move equipment to the site. The estimated cost of the Nary Breaker Station is $2.6 million

2.4.3. Property Acquisition

Construction of the Project would require acquisition of easements for the transmission line portion of the Project and for the land for a new Cass Lake Substation (under Route Alternative 1) and a Nary Substation (under Route Alternative 1 when used in conjunction with Segment Alternative A).

2.4.3.1. Transmission Line Right-of-Way Acquisition

Following issuance of a Route Permit by the Commission, the Applicants would begin the process of acquiring easements for the location and construction of Project. The right-of-way agent would complete a search of the public records of all lands involved with the Project. A title report would be developed to determine the legal description of the property, the owner(s) of record for the property, and information regarding easements, liens, restrictions, encumbrances, and other conditions of record.

Because of the numerous notices published and mailed as well as the public meetings held during the Applicants' development of the Project and the environmental review of the Project, and the hearings held in the Project area as part of the Minnesota route permitting process, it is likely that the majority of landowners would be aware of the Project prior to contact from a right-of-way agent. Once the property owners along the approved route have been identified, a right-of-way agent would inform them of the construction of the transmission line and how it may affect their property. With a property owner's permission, survey crews would enter the property to complete the preliminary survey work and possibly conduct soil investigations for structure location. As the design of the transmission line nears completion, the survey crews would stake the structure locations. The right-of-way representative would show the landowner where the structure was proposed to be located on the property and would discuss any location concerns.

During the acquisition process, the property on which easement rights were required would be evaluated by the agent to determine the amount of just compensation. In the event that a complicated appraisal problem arises, or if a statutory requirement dictates, the Applicants' right-of-way agent would arrange for an appraisal to determine the value of the rights being acquired. Circumstances requiring an appraisal include land that has mining interests, business interests or recreational opportunities, or if condemnation is required. A third party appraisal is generally not used unless there is a dispute over the value of the land. The Applicants would then make an offer to the owner based upon the appraisal.

The right-of-way agent would begin the negotiating process by presenting the required legal documents to the property owner. Property owners would also be provided maps of the transmission line route or site showing the landowner's parcel. The offer of compensation for an easement or for purchase of the property would be explained as requested, and the landowner would be allowed a reasonable amount of time in which to consider the offer, obtain their own appraisal, and present information the owner believes is relevant to determining the value of the property.

The agent would work closely with the landowner to try to arrive at a negotiated settlement that is fair and acceptable to all parties. In most cases, right-of-way agents are able to work with the landowners to address their concerns. In some cases a negotiated settlement is not possible and the Applicants may choose to obtain the ROW by exercising their right of eminent domain (condemnation). Condemnation proceedings would only be initiated by the Applicants if reasonable efforts to negotiate an agreement at what is believed to be just compensation have failed.

Minnesota Statute 216E.12, subd. 4 (sometimes referred to as the "buy the farm" provision) allows landowners of certain classes of land (e.g., homestead, agricultural, or seasonal residential recreational, as defined in Minnesota Statute 273.13) the option of requiring the Applicants to purchase the owner's entire property if the transmission line crosses a portion of the property.

2.4.3.2. Substation Property Acquisition

No additional land is needed for the proposed 230 kV upgrades at the Wilton and Boswell substations, or the possible 230 kV upgrade at the Cass Lake Substation. However, land must be acquired if the route selected requires a new 230 kV substation in the Cass Lake area (for Alternative 1) or the Nary Breaker Station (if Route Alternative 1 is used in conjunction with Segment Alternatives A and L). If the final route permit requires the construction of a new Cass Lake 230 kV Substation or a Nary Breaker Station, the Applicants would contact the appropriate landowners to obtain the property. The Applicants would seek to obtain the property through a voluntary purchase, and if an agreement could not be reached, would consider exercising their right of eminent domain. The "buy the farm" provision of Minnesota Statute 216E.12, subd. 4, would also apply to any substation permitted as part of the Commission's Route Permit.

2.4.4. Preconstruction Activities

Preconstruction activities include preparation and approval of the Certificate of Need and the Route Permit applications, completing the required environmental review, coordinating and obtaining all other necessary permits and approvals, and acquiring ROW easements.

2.4.5. Transmission Line Construction Procedures

Once access to the land is granted, preparation of the ROW for construction begins in coordination with landowners. Underground utilities would be identified and located in cooperation with local utility companies to minimize conflicts with the existing utilities along the route. If necessary, the Applicants would work with local utility owners to relocate existing utilities.

Up to three staging areas of approximately 5 acres each would be established for temporary storage of materials and equipment once a route is chosen, in consultation with local landowners and consistent with local, state, and federal permit requirements. A previously-disturbed or developed area is typically used to minimize impacts to sensitive resources. Such an area includes sufficient space to lay down material and pre-assemble some structural components or hardware. Other staging areas located along the ROW are limited to a structure site for lay down and framing prior to structure installation. Stringing setup areas are also used to store conductors and the equipment necessary for stringing operations.

Preparation for construction begins with development of temporary access points from existing roads. Clearing of all woody vegetation and brush within the 125-foot-wide ROW would be required to facilitate the safe and efficient construction, operation, and maintenance of the transmission line. A reasonably level temporary access path is required to provide for safe passage of construction equipment within the ROW. At structure locations, a stable working surface free of tripping hazards is required for framing and erecting structures, and for the installation of concrete foundations if required.

Vegetation would be cut at or slightly above the ground surface. Rootstock would be left in place to stabilize existing soils and to regenerate vegetation after construction. With the approval of the landowner or land manager, stumps of tall-growing species would be treated with an approved herbicide to discourage re-growth. Within the CNF, alternative means of stump control would be identified in consultation with the land managers.

The CNF would require a timber sale for merchantable timber. Merchantable timber is typically cut to standard log lengths and temporarily stacked along the ROW until transport. Vegetation clearing debris (e.g., unmerchantable trees, brush, and slash) may be cut and scattered, placed in windrow piles, chipped, or burned, depending upon the location and requirements of the land manager or land owner. Material suitable for firewood may be collected and made available to local residents.

To minimize the potential for tire and chassis damage to construction equipment, and to maintain a safe, level access path and structure installation area, incidental stump removal would occur. Stumps that interfere with the placement of mats or movement of construction equipment would be ground down to a point at or slightly below ground level. The stump grinding equipment would mix woody material with soils. This

mixture would be evenly spread in the vicinity of the stump to a depth that would allow existing low-growing vegetation to re-establish.

If temporary removal or relocation of fences is necessary, the installation of temporary or permanent gates would be coordinated with the landowner. The right-of-way agent would also work with landowners for early harvest of crops, where possible. During the construction process, the Applicants may ask the property owner to remove or relocate equipment and livestock from the ROW.

Transmission line structures are generally designed for installation at existing grades. However, if vehicles or installation equipment cannot safely access or operate near the structure, minor grading of the immediate terrain would be performed to provide a reasonable level working surface for construction and maintenance of the structure.

Environmentally sensitive areas or areas susceptible to soil erosion would require special construction techniques, including the use of low ground pressure equipment, timber mats, terracing, water bars, bale checks, rock checks, or temporary mulching and seeding of disturbed areas exposed during long periods of construction inactivity. Long-term soil erosion control measures may include permanent seeding, mulching, erosion control mats, or other measures depending on site conditions. Temporary silt fences, sedimentation ponds, and other measures may be utilized to prevent sediment from running off into wetlands or other surface waters.

Construction equipment would be inspected frequently to ensure hydraulic systems and oil pans are in good condition and free of significant leaks. Portable spill containment kits would be required for each piece of construction equipment with the potential to discharge a significant amount of oil to the environment. Operators would be present at the nozzle at all times when refueling is in progress. In the event of a spill, the source of the spill would be identified and contained immediately upon discovery. The spill and contaminated soils would be collected and treated and disposed of in accordance with all applicable federal, state, and local requirements. If a significant spill were to occur to surface waters, methods to contain and recover released material such as floating booms and skimmer pumps would be used. Noticeably contaminated soils would be excavated and placed on and covered by plastic sheeting in bermed areas. An emergency response contractor would be secured, if necessary, to further contain and clean up a severe spill. Refueling of equipment in proximity to sensitive resources, such as lakes and wetlands, would not be permitted.

In the event that protected species or cultural and historical artifacts are likely to be encountered during construction activities, project management personnel would consult with regulatory authorities regarding appropriate construction procedures and mitigation measures.

Construction materials would be hauled either directly from the local highway or railroad network to structure sites, or brought first to material staging areas and then to the structure sites. The transmission line components, including the poles, arms, and

hardware, are normally brought to the temporary staging areas on flatbed trucks. These materials are stored until needed and then loaded on flatbed trailers or special pole trailers for delivery to the structure site where they are unloaded for installation.

A stable working surface is required at structure locations. Timber mats are commonly used to provide a working surface in unstable soils. Structures are normally assembled on the ground along with insulator assemblies ropes and then raised into position. For direct embedded structures, the poles are set in augured holes with large rubber-tired or tracked cranes. The annular space between the pole and the augured hole is backfilled with native soils if suitable or with granular materials.

Where reinforced concrete foundations are required, large rubber tired or track mounted auger equipment is used to excavate a circular hole of the appropriate diameter and depth. In upland areas, excavated material would be spread evenly around the structure base to promote site drainage. Reinforcing steel and anchor bolts are set in position. Ready-mixed concrete is then placed in the excavation. In wetland areas, a telescoping temporary steel caisson would be placed in the foundation hole to stabilize the soil walls. Concrete is placed in the excavation. Water pumped from the excavation would be placed into tanker trucks or empty concrete trucks and hauled away to a specially designated upland disposal area, or brought back to the concrete batch plant for discharge. Concrete truck wash water would be discharged only in specially designated upland disposal areas or at the concrete batch plant.

After the concrete is poured, the steel caisson is removed. In some situations, a permanent caisson may be required to stabilize the excavation. During drilling, a minimal amount of granular material (from an outside source) would be placed in the area between the caissons and the timber mats (if required at that location) to provide safe footing for construction personnel. During final restoration, the granular material is leveled or removed to restore the original ground contours for re-vegetation of native species. After the foundation concrete is placed, excess excavated materials would be transported to a suitable upland site by truck for disposal, in compliance with local, state, and federal requirements. After allowing adequate curing time, the steel pole structure base plates are bolted to the concrete foundations.

The wire stringing process starts in a setup area prepared to accommodate the stringing equipment and materials, normally located mid-span on the centerline of the ROW. The rope machine, new conductor wire trailers, and tensioner are located at the wire stringing set-up area. This phase of construction occurs after the structures have been erected, and fitted with stringing blocks (also called dollies or sheaves) and with single-leader "p-line" ropes that reach the ground. Stringing blocks are a type of pulley that attach to the insulator assembly and temporarily support a pulling rope or "p-line" and a wire rope or "hard line," which in turn supports the conductor before it is permanently "clipped in."

The process starts as the construction crew pulls the p-lines toward the first structure beyond the setup area. The p-lines are normally pulled down the ROW with a small

wide-track bombardier or other small equipment. At each structure, the ropes are detached from the bombardier and attached to the single leader p-line to lift the ropes up into the dollies. Then the ropes are reattached to the bombardier and driven to the next structure for the same process. After the p-line has been strung through all the structures for all phases within the stringing interval, the pulling ropes are attached to a hard line and pulled, one at a time, back through the dollies to the beginning of the interval. A hard line set-up is located at the opposite end of the interval from the wire stringing setup area. Each hard line is then attached to the conductor wire with an attachment called a "sock," which is pulled back through the dollies to the end of the interval. Crewmembers travel along the access route in a pickup truck and follow the "sock" as it is being pulled to make sure it does not get hung up in the dollies. One at a time, the conductor wires are then pulled to the appropriate tension and clipped into place utilizing permanent suspension hardware.

Wire stringing and hard line set-up areas are normally located in upland areas during spring, summer, or fall conditions. During winter when frozen conditions provide a stable working surface, set-ups may be located in wetland areas. If set-ups in wetlands are required when surface conditions are not stable, extensive use of timber matting is required. All activities associated with jurisdictional wetlands would be conducted in accordance with local, state, and federal (i.e., USACE) regulations and permitting.

Spanning streams and rivers by placing structures above the normal high water level is the most effective means to minimize impacts to water areas during construction. In general, construction equipment is not permitted to be driven across waterways except under special circumstances, and then only after discussion with the appropriate resource agency. Where waterways must be crossed by construction equipment, the Applicants would use temporary clear span bridges to minimize the impact on the waterway. For those waterways that cannot be crossed with construction equipment, workers might walk across or use boats during wire stringing operations to pull in the new conductors and shield wires or in the winter drive equipment across the ice. In areas where construction occurs close to waterways, appropriate measures would be employed to minimize soil erosion and prevent sedimentation of the waterways. The Applicants would ensure that equipment fueling and lubricating occur at locations that prevent contamination of waterways.

2.4.6. Substation Construction Procedures

The substation upgrades involve adding new equipment, modifying existing equipment, or replacing existing equipment with new equipment. All construction work for the Wilton, Boswell, and the possible upgrading of the existing Cass Lake substation would occur within the existing substation property. Construction work on a new possible Cass Lake Substation and Nary Breaker Station would occur on newly acquired property.

The substations would be built or upgraded in compliance with the applicable requirements of the National Electrical Safety Code (NESC), Occupational Safety and Health Act (OSHA), and state and local regulations. The final design of new or upgraded substations would take the local conditions of the sites into consideration and, where warranted, would include safety provisions beyond the minimum requirements established in the various applicable safety codes. Contractors would be required to adhere to all such safe working practices. The new and upgraded substations would be designed to allow future maintenance to be done with minimum impact to substation operation and with the necessary clearance from energized equipment to ensure safety.

Construction of a new substation or breaker station, as well as expansion of existing substations, would include site grading, installation of concrete foundations for substation equipment, installation of a fence along the substation perimeter to contain substation equipment and secure the facility, installation of gravel surfacing material within the fenced area, and installation of substation equipment. Sites for a new substation, substation expansion area, or breaker station would be graded and leveled to ensure both a stable base for the substation equipment and proper drainage and runoff control in accordance with the Stormwater Pollution Prevention Plan. Depending upon soil characteristics specific to each site, soil may need to be replaced to ensure stability and drainage. Topsoil would be removed, stockpiled, and re-spread on-site. Excess soil would be removed from the site. Once the site is graded, a perimeter fence, typically a chain link fence, is installed to contain the substation equipment. After installation of the fence, concrete foundations are placed to support the substation equipment and gravel is laid throughout the fenced area. After the surface area is prepared, substation components would be delivered on tractor-trailer trucks and installed on their foundations.

2.4.7. Restoration Procedures

Unless otherwise agreed upon by the landowner, all storage and construction buildings, including concrete footings and slabs and all construction materials and debris, would be removed from the site once construction is complete. Post-construction reclamation activities involve restoring the areas to their original condition to the extent practicable, including removing and disposing of debris; removing all temporary facilities, including staging and laydown areas; employing appropriate erosion control measures; and reseeding areas disturbed by construction activities with vegetation similar to that which was removed. Seed mixture would be certified as free of noxious or invasive weeds. In cases where soil compaction has occurred, the construction crew or a restoration contractor uses various methods to alleviate the compaction, or as negotiated with landowners.

Once post-construction reclamation is completed, landowners are contacted by the right-of-way agent to determine if the clean-up measures have been finished to their satisfaction and if any other damage may have occurred. If damage has occurred to crops, fences, or the property, the Applicants would negotiate with the affected

landowner, under terms outlined in the easement agreement, to determine an acceptable compensation for the damage. Depending upon the wishes of the landowner, compensation may be monetary or may involve hiring a contractor to restore the damaged property as near as possible to its original condition.

2.4.8. Transmission Line Maintenance and Operation

Access to the transmission line ROW is required to perform periodic inspections, conduct maintenance, and repair damage. Regular maintenance and inspections would be performed during the life of the transmission line to ensure its continued integrity. Inspections would be limited to the ROW and to areas where obstructions or terrain may require off-right-of-way access. All inspection and maintenance activities would be conducted consistent with local, state, and federal regulations and permits. If problems are found during inspection, repairs would be performed and the landowner would be compensated for any loss.

The ROW would be managed to control vegetation that interferes with the operation and maintenance of the transmission line. Portions of the Project route would be in forested areas, requiring tree maintenance to maintain the integrity of the transmission line. Native shrubs that would not interfere with the safe operation of the transmission line would be allowed to reestablish in the ROW. The Applicants' practice provides for the inspection of major transmission lines every year to determine if clearing is required. Other transmission lines are typically reviewed on a two-year cycle. Right-of-way clearing practices include a combination of mechanical and hand clearing, along with herbicide application where allowed, to remove or control vegetation growth. Noxious weed control with herbicides would be conducted on a two-year cycle around structures and anchors, where approved for use and consistent with the Applicants approved operation and maintenance plans for private and public (i.e., CNF, MnDNR, and County) lands.

2.4.9. Substation Maintenance and Operation

Inspections would be performed regularly over the life of the substations to maintain equipment and make necessary repairs. Routine maintenance would be conducted as required to remove undesirable vegetation that may interfere with the safe and reliable operation of the substations.

2.4.10. Construction Schedule and Workforce

The Applicants require an in-service date of December 2011. Project construction would commence once the permitting and final design is completed. The anticipated construction schedule and workforce requirements are shown in Table 2-4.

Table 2-4: Construction Schedule and Workforce Estimates

Task	Schedule	Workforce
Permitting	January 2007 - Summer 2010	27*
Land Acquisition	Spring 2010 - Fall 2010	6
Project Design	January 2010 - Fall 2011	6
Project Construction	Fall 2010 - Fall 2011	75
In-Service Date	December 2011	N/A

Note: * The Applicants have 15 persons assigned to work on the Project (i.e., utility staff and engineering/environmental/legal consultants), with another 12 persons retained to conduct biological/archeological field work.

2.4.11. Future Plans and Abandonment

The expected lifespan for the Project is over 50 years, provided that the Project's components are maintained. If the Project were to be abandoned, transmission structures would be removed, substation components would be removed and, without vegetation management along the transmission ROW or substation sites, surrounding vegetation would reclaim the area disturbed by the Project. In practice, transmission lines are seldom abandoned.