1) AQ Facility ID No.: **14100003**

2) Facility Name: **Great River Energy - Elk River Station**

3) Flow Diagram:

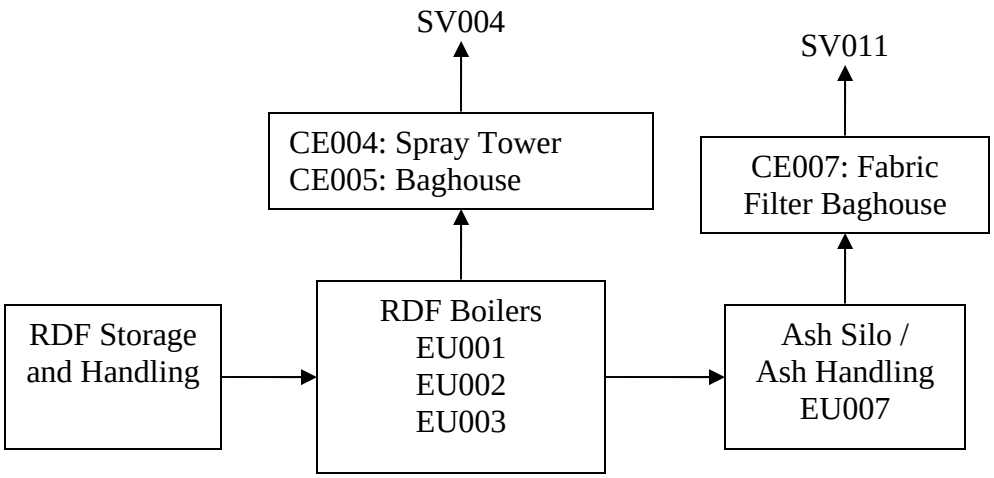

Figure GI-02-2. Process Flow Diagram for RDF Combustor

Minnesota Pollution Control Agency

AIR QUALITY
520 LAFAYETTE ROAD
ST. PAUL, MN 55155-4194

PERMIT APPLICATION FORM **GI-03**

FACILITY AND STACK/VENT DIAGRAM

2/16/05

1) AQ Facility ID No.: **14100003**

2) Facility Name: **Great River Energy - Elk River Station**

3) Facility and Stack/Vent Diagram:

See attached diagrams.

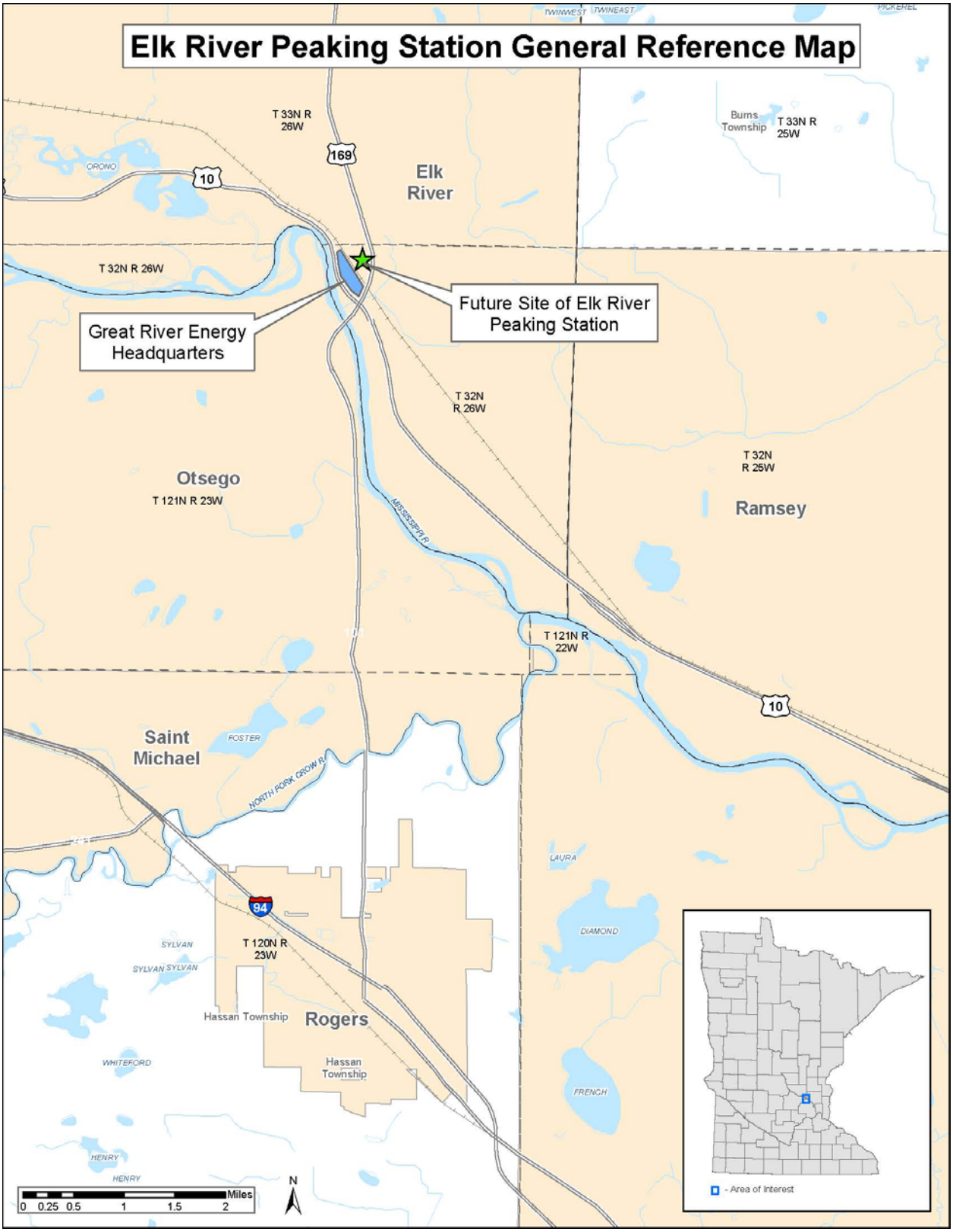
Elk River Peaking Station General Reference Map
T 33N R 26W
169
10
ORONO
Elk River
Burns Township
T 33N R 25W
T 32N R 26W
Future Site of Elk River Peaking Station
Great River Energy Headquarters
T 32N R 26W
T 32N R 25W
Otsego
T 121N R 23W
Ramsey
MISSISSIPPI R
T 121N R 22W
10
Saint Michael
FOSTER
NORTH FORK CROW R
LAURA
94
DIAMOND
SYLVAN
SYLVAN SYLVAN
T 120N R 23W
Hassan Township
Rogers
Hassan Township
WHITEFORD
FRENCH
HENRY
HENRY
Miles
0 0.25 0.5 1 1.5 2
N
- Area of Interest

stacks

Facility Boundary

Meters

100 0 100 200

Figure 2

Form GI-03 Stack Location
Great River Energy
Elk River, MN
June 2007

Minnesota Pollution Control Agency

AIR QUALITY
520 LAFAYETTE ROAD
ST. PAUL, MN 55155-4194

PERMIT APPLICATION FORM **GI-04**

STACK/VENT INFORMATION

7/25/05

1) AQ Facility ID No.: **14100003** **2)** Facility Name: **Great River Energy - Elk River Station**

3a) SV ID No.	**3b)** Operator's Description	**3c)** Height of Opening From Ground (ft.)	**3d)** Inside Diameter in ft. (left column only) or Length x Width in ft. (both columns)		**3e)** Design Flow Rate at Exit (acfm)	**3f)** Exit Gas Temperature (° F)	**3g)** Rate/Temp Information Source	**3h)** Discharge Direction
004	RDF Combustor Stack	125	8		298000	1280	M	U
011	Ash Blower Vent	50	0.8		2077	150	M	H
012	Peaking Turbine Stack	90	19.1		2780000	1100	M	U