7. ENGINEERING AND OPERATIONAL DESIGN OF THE PROPOSED HVTL AND SUBSTATIONS

The design voltage for the entire Project length is 115 kV.

7.1 Transmission Structures

7.1.1 Segments 1 and 2 - Pequot Lakes Substation to Pine River Substation and Pine River Substation to Badoura Substation

Conductors

MP plans to construct Segments 1 and 2 of the new transmission line using 636 aluminum conductor steel reinforced (ACSR) Rook conductor that has an ampacity of 914 amps at 100 degrees C. This will limit maximum continuous electric power capacity of the line to 182 MVA, provided there is not a more restrictive limit associated with the line's substation terminal equipment or transformation capacity. There would be three single conductors for the 115 kV circuit. The line will be shielded with a 64 mm 2/528 (24-fiber) overhead ground wire and depending on structure type, a 3/8 inch H.S. (7-strand) steel or overhead ground wire will also be used.

Structure Type, Height and Span Length

Three structure types are being considered for use in these segments: wood H-Frame, wood single pole, and double circuit steel pole. Figure 7-1 shows the cross section views of these 115 kV transmission line structures.

Wood H-Frame

The MP two-pole H-Frame structure design will be used principally in the 91 Line (230 kV) corridor because it is suited for areas with rugged topography, soft soils, and where longer spans are required to avoid or minimize placement of structures in wetlands or waterways. This structure may also be used in areas where the line diverges from the 91 Line corridor where longer spans and shorter structure heights are appropriate. The average span would be 600 to 900 feet, with 1,000-foot spans achievable in certain topography. The structure height would average 60 to 90 feet, with taller structures required for exceptionally long spans and in circumstances requiring additional vertical clearance (i.e., railroad tracks) exceeding the NESC requirements.

Single Pole Steel Double Circuit

This pole design is used in areas where it is appropriate to support two high voltage circuits on the same structure. The advantage of this design is less right-of-way requirement; disadvantages of this design are poor performance in soft soils and a single failure mode can result in the loss of both high voltage circuits. Loss of both circuits would not have a significant impact on reliability if the two circuits serve different purposes; however, if the two circuits serve the same purpose, such as the only 115 kV electric supply to the Pine River Substation, it can have a significant impact on reliability of service. Due to reliability concerns, this structure type is planned to be used only in the immediate vicinity of the Pine River Substation.

Figure 7-1 Typical Minnesota Power 115 kV Transmission Structures

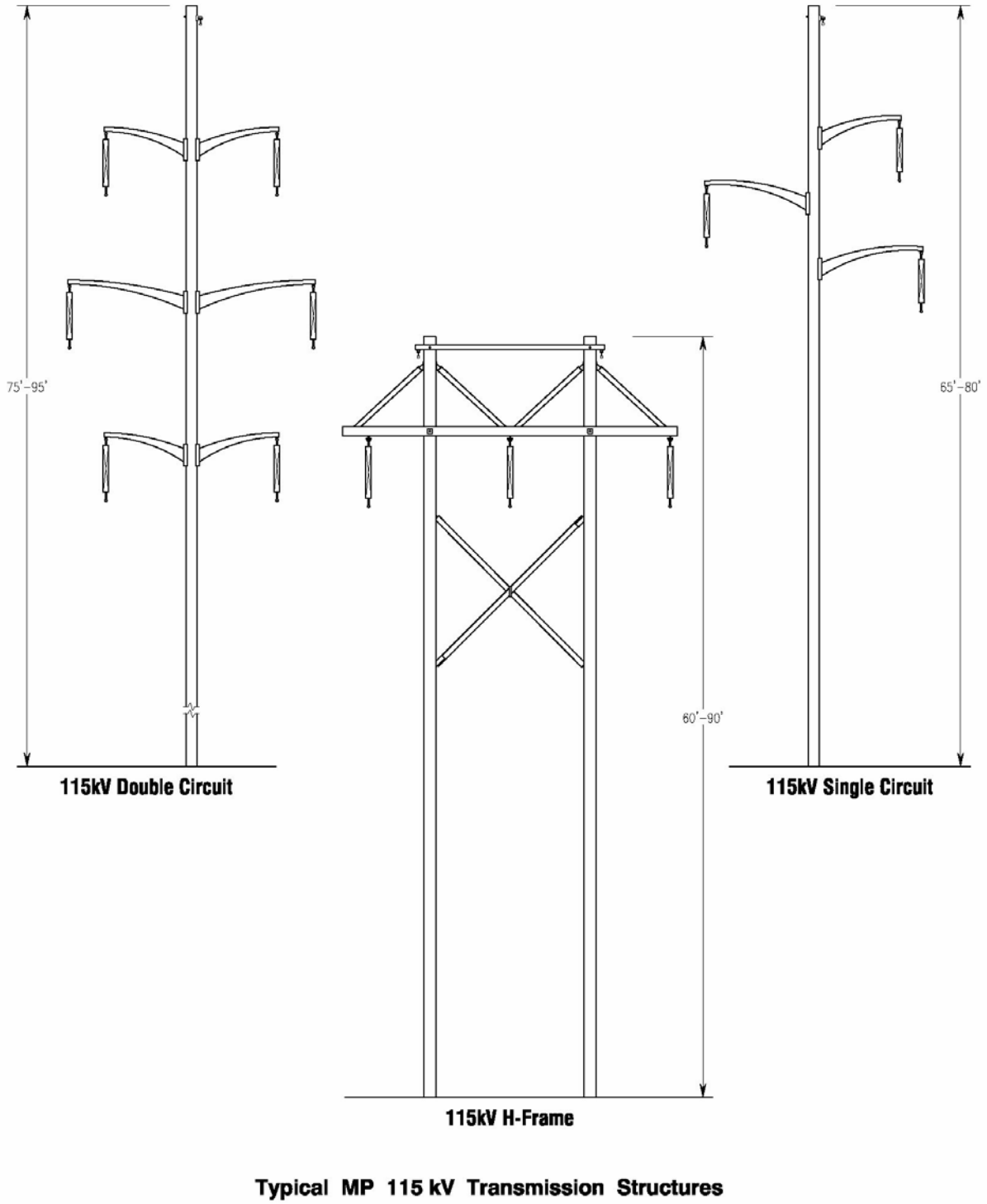

The typical span would be 550 feet with slightly longer spans achievable with certain topography. The structure height would average 75 to 95 feet.

Single Pole (no underbuild)
Single pole with davit arms construction (no underbuild) is being considered for the area exiting the Pequot Lakes Substation to the point it joins the MP 91 Line right-of-way. This structure type is also being considered as an alternative for the area where the line diverges from the MP 91 Line right-of-way to near the Pine River Substation if the final route is along CR 171 and CSAH 1.

The single pole design is suited for areas where available right-of-way is limited, such as where corridors are shared along roads in developed areas. Average structure height would be 65 to 80 feet to achieve average span lengths of 400 to 600 feet. Specific structure heights and span lengths may exceed the average due to land use requirements and topography.

H-Frame construction is also being considered for these same areas and structure selection will be dependent on actual alignment of the line. For example, for the area near Pine River, if the line is located behind the homes it may be more appropriate to use H-Frame structures to increase span length. As mentioned above, if the line is located adjacent to the road, it may be appropriate to use single pole construction to limit right-of-way width. Near Pequot Lakes the plan is to share right-of-way with existing MP 34.5 kV and GRE 69 kV circuits. If it is determined that longer spans are more appropriate for this area, H-Frame would be used. If new right-of-way needs to be limited, single pole would be the more appropriate structure.

7.1.2 Segments 3 and 4 - Badoura Substation to Birch Lake Substation

Conductors
In Segments 3 and 4 of the new transmission line, three single conductor phase wires and one or two shield wires would be utilized. GRE will construct these segments of the line using 795 MCM ACSS phase conductors with seven steel core strands and 26 outer aluminum strands. This conductor has an ampacity of 1586 amps at 200 degrees C. This will limit maximum continuous electric power capacity of the line to 316 MVA, provided there is not a more restrictive limit associated with the line's substation terminal equipment or transformation capacity. The line will be shielded with a 64 mm 2/528 (24-fiber) overhead ground wire and depending on structure type, a 3/8 inch H.S. (7-strand) steel or overhead ground wire will also be used.

Structure Type, Height and Span Length
Four structure types are being considered for use in these segments: wood H-Frame, wood single pole-post (THP), wood single pole braced post (TBP), and wood single pole with distribution underbuild (THP-U). Figure 7-2 shows the cross section views of these 115 kV transmission line structures.

Figure 7-2 Typical GRE 115 kV Transmission Structures

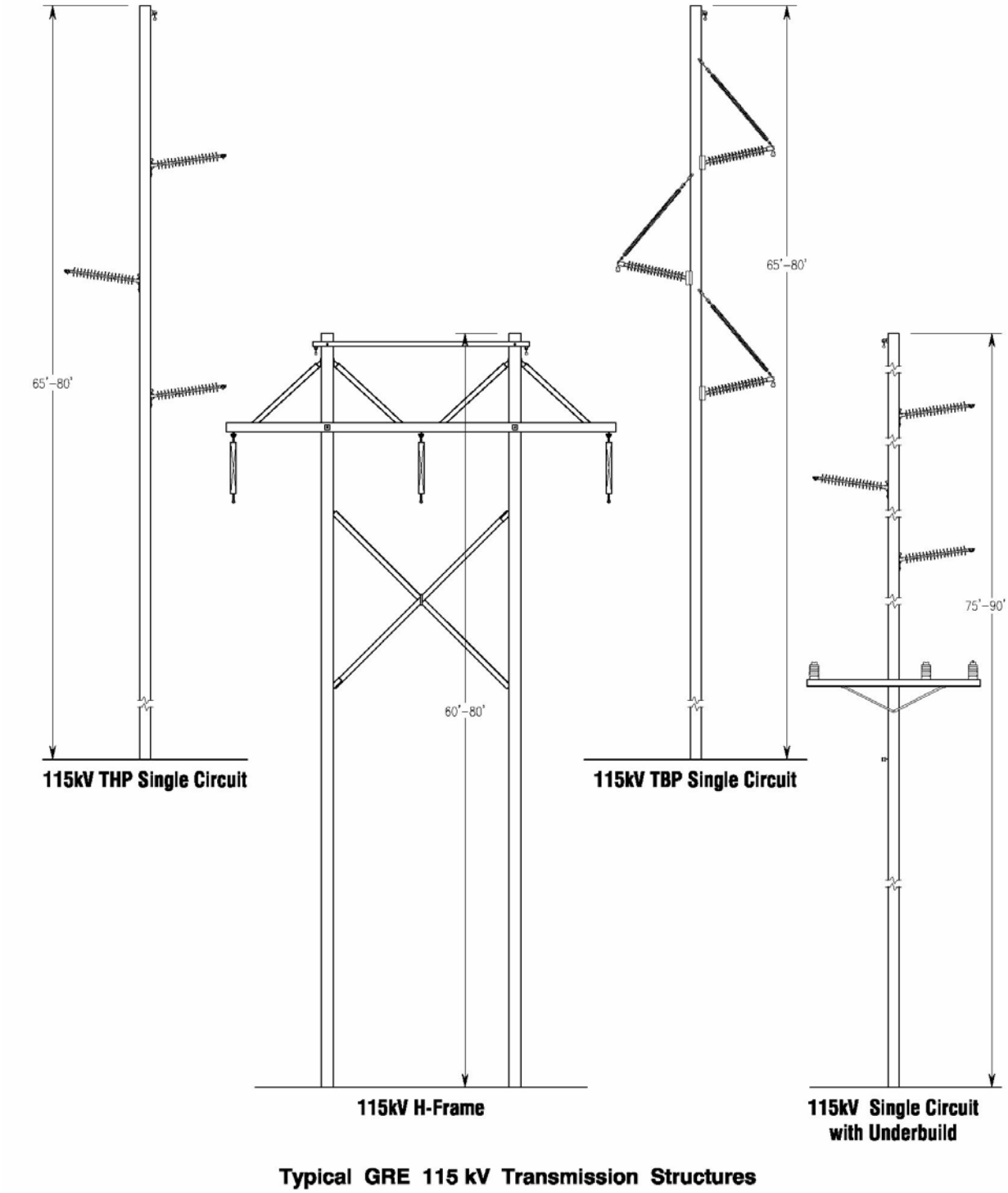

Wood H-Frame

The GRE two-pole structure H-Frame design will be used in areas with rugged topography and where longer spans are required to avoid or minimize placement of structures in wetlands or waterways. The average span would be 600 to 700 feet, with 1,000-foot spans achievable with certain topography. The structure height would average 60 to 80 feet, with taller structures required for exceptionally long spans and in circumstances requiring additional vertical clearance (i.e., railroad tracks) exceeding the NESC requirements.

Single Pole (no underbuild)

Single pole wood structures with horizontal post insulators (THP) will be used for the single circuit segment of the Project in areas where available right-of-way is limited, such as where corridors are shared along roads and in developed areas. Horizontal post insulators will be used unless design requires longer spans beyond the capability of the insulators, in which case a braced post design (TBP) will be utilized to accommodate the increased loadings. Angles in the line will require guying (the use of anchors and support cables) or specialty structures. Where guying is not practicable, laminated or other self-supporting steel poles will be used with drilled pier foundations.

The average span will be 300-400 feet and heights will range from 65 to 80 feet. Structures, pole heights and spans will vary depending upon topography and environmental constraints (such as highway crossings, stream crossings, and required angle structures).

Single Pole (with underbuild)

This single pole with underbuild (THP-U) design is used in areas where existing land use development restricts the placement of two separate power line circuits—a high voltage circuit and a lower voltage (distribution line) circuit. The advantage of this design is less right-of-way requirement; however, there are significant operating, maintenance, and cost factors to consider. The higher voltage circuit is “stacked” on top of the lower voltage circuit, resulting in a taller pole that averages 75 to 90 feet in height. Specific areas may require taller poles due to topography and/or vertical conductor clearance requirements. The conductor used for the lower voltage circuit and other limiting factors result in shorter average spans, averaging 250 to 350 feet. The shorter average spans would require more poles per mile than the other two structure design options.

7.1.3 Segment 5 - Badoura Substation to Long Lake Substation

Conductors

GRE will construct Segment 5 of the new transmission line using 795 ACSR Tern conductor that has an ampacity of 982 amps at 100 degrees C. This will limit maximum continuous electric power capacity of the line to 195 MVA, provided there is not a more restrictive limit associated with the line’s substation terminal equipment or transformation capacity. The line will be shielded with a 64 mm 2/528 (24-fiber) overhead ground wire and depending on structure type, a 3/8 inch H.S. (7-strand) steel or overhead ground wire will also be used.

Structure Type, Height and Span Length

Four structure types are being considered for use in this segment: wood H-Frame, wood single pole-post (THP), wood single pole braced post (TBP), and wood single pole with distribution underbuild (THP-U). Figure 7-2 (above) shows the cross section views of these 115 kV transmission line structures.

Wood H-Frame

The GRE two-pole structure H-Frame design will be used in areas with rugged topography and where longer spans are required to avoid or minimize placement of structures in wetlands or waterways. The average span would be 600 to 700 feet, with 1,000-foot spans achievable with certain topography. The structure height would average 60 to 80 feet, with taller structures required for exceptionally long spans and in circumstances requiring additional vertical clearance (i.e., railroad tracks) exceeding the NESC requirements.

Single Pole (no underbuild)

Single pole wood structures with horizontal post insulators (THP) will be used for the single circuit segment of the Project in areas where available right-of-way is limited, such as where corridors are shared along roads and in developed areas. Horizontal post insulators will be used unless design requires longer spans beyond the capability of the insulators, in which case a braced post design (TBP) will be utilized to accommodate the increased loadings. Angles in the line will require guying (the use of anchors and support cables) or specialty structures. Where guying is not practicable, laminated or other self-supporting steel poles will be used with drilled pier foundations.

The average span will be 300-400 feet and heights will range from 65 to 80 feet. Structures, pole heights and spans will vary depending upon topography and environmental constraints (such as highway crossings, stream crossings, and required angle structures).

Single Pole (with underbuild)

This single pole with underbuild (THP-U) design is used in areas where existing land use development restricts the placement of two separate power line circuits-a high voltage circuit and a lower voltage (distribution line) circuit. The advantage of this design is less right-of-way requirement; however, there are significant operating, maintenance, and cost factors to consider. The higher voltage circuit is “stacked” on top of the lower voltage circuit, resulting in a taller pole that averages 75 to 90 feet in height. Specific areas may require taller poles due to topography and/or vertical conductor clearance requirements. The conductor used for the lower voltage circuit and other limiting factors result in shorter average spans, averaging 250 to 350 feet. The shorter average spans would require more poles per mile than the other two structure design options.

7.1.4 Line Clearances

The transmission lines will be designed to meet NESC C2-2007 standards (Institute of Electrical and Electronics Engineers, 2007). The NESC recommends minimum safety

standards for clearances over roadways, buildings, signs, light standards, and other facilities.

In addition, the Applicants will comply with their respective standards. MP has company standards that meet or exceed NESC requirements.

GRE has company standards that meet or exceed C2-2007 NESC requirements, and also follows the RUS Design Manual for High Voltage Transmission Lines (US Department of Agriculture, 2005), which recommends clearances above the minimum NESC values to account for construction tolerances, such as a pole that is set deeper than originally specified.

Clearances over highways and roadways will exceed the 23 feet minimum vertical clearance recommended by NESC and RUS standards and will comply with any requirements imposed by MNDOT or local county highway permits. Although the existing standards give recommended clearances over buildings, MP and GRE generally do not locate transmission lines directly over a building. Horizontal clearances to buildings, signs, light standards, and other installations will be determined by calculating the blowout of the wire, structure deflection, and safe electrical clearance from the line.

7.2 Substations

7.2.1 Pequot Lakes Substation

The proposed 115 kV line will terminate at the existing MP Pequot Lakes 115/69/34.5 kV Substation. Modifications to this substation will include a new 115 kV line entrance and modification of the existing 115 kV bus to improve reliability. This will include the addition of two 115 kV line breakers, a 115 kV bus tie breaker and associated controls. No new land will be required for these additions; however, the fenced area will be expanded by less than one acre. See Section 5.3.2, Pequot Lakes Substation, for additional details.

7.2.2 Pine River Substation Additions

Two sites are under consideration for the Project's connections to the Pine River area 34.5 kV and 12.5 kV systems: an expansion at the existing Pine River Distribution Substation and relocating the 34.5 kV facilities to a new location. The additional equipment required for the Project is dependent on the final location of the 115/34.5 kV facilities.

<u>Expansion at Existing Pine River Distribution Substation</u>
A 115 kV bus would be added with 115 kV bays to accommodate two 115 kV line exits, a 115/34.5 kV transformer, a 115/12.5 kV transformer and associated protection. In addition, a new 34.5 kV bus and two 34.5 kV feeder exits and associated switchgear would be added, as well as a 12.5 kV bus to connect the low side of the 115/12.5 kV

transformer to the existing CWP 12.5 kV bus. Lastly, a control house (approximately 20 x 24 feet) will be constructed inside the fence near the terminus of the access road. The upgraded access road will be aggregate surfaced with Class 5 material.

Addition at New Substation Site

At this site, only 115 kV and 34.5 kV additions would be needed. This would include a 115 kV bus with 115 kV bays to accommodate up to three 115 kV line exits, a 115/34.5 kV transformer, and associated protection. The 34.5 kV additions would include a 34.5 kV bus and two 34.5 kV feeder exits and associated switchgear. An access road would be constructed and surfaced with Class 5 material and a control house (approximately 20 x 24 feet) would be constructed inside the fence near the terminus of the access road.

In addition to the above facilities, the 34.5/12.5 kV transformer at the existing CWP Pine River Substation would be replaced with a 115/12.5 kV transformer. This would require development of a 115 kV bus, including a 115 kV line entrance and associated protection, as well as a 12.5 kV bus between the low side of the 115/12.5 kV transformer and the existing CWP 12.5 kV bus. A radial 115 kV transmission line would be constructed between the “new substation site” and the upgraded CWP distribution substation.

See Section 5.3.1 for additional details on the Pine River area substation additions required to support the Project.

7.2.3 Badoura Substation

Additions at the existing Badoura 115 kV substation will include three new 115 kV line exists, associated bus work, circuit breakers and control facilities. In addition, existing line entrances will be reconfigured to improve area reliability and a 115 kV tie breaker will be added. No additional land will be required for the substation upgrades; however, the fenced area will be expanded by less than one acre. See Section 5.3.2, Badoura Substation, for additional details.

7.2.4 Birch Lake Substation

Additions at the Birch Lake Substation include one 115 kV line exit and 115/69 kV, 60 MVA transformer and associated circuit breakers, protection and controls. To accommodate the new transformer addition and line entrance, a new 115 kV bus structure will be built and the existing transformer and 34.5 kV line exits will also have to be modified. The existing fenced-in area may be expanded by less than one acre to provide room for new 115 kV structure, transformer and 34.5 kV modifications. See Section 5.3.2, Birch Lake Substation, for additional details.

7.2.5 Long Lake Substation

When GRE constructed the Long Lake Substation, it was designed to accommodate a second 115 kV line exit and transformer. Additions as part of this Project include bringing the proposed 115 kV line into the substation, and a second 115/34.5 kV, 50 MVA transformer and associated circuit breaker and controls. The Itasca-Mantrap Park Rapids Distribution Substation will also be relocated to the Long Lake Substation. These substation additions will not require additional land and the fenced area is not expected to be expanded. See Section 5.3.2, Long Lake Substation, for additional details.

7.3 Electric and Magnetic Fields

7.3.1 General

Electric and magnetic fields (EMF) are present around any electrical device, and can occur indoors and outdoors. Electric fields are the result of voltage or electrical charges, and the intensity of the electric field is related to the operating voltage of the line or the device. Magnetic fields are the result of the flow of electricity or current that travels along transmission lines, distribution (feeder) lines, substation transformers, house wiring, and household electrical appliances. The intensity of a magnetic field is related to the current flow through the conductors (wire).

Considerable research has been conducted throughout the past three decades to determine whether exposure to power-frequency (60 hertz) electric and magnetic fields causes biological responses and health effects. Epidemiological and toxicological studies have shown no statistically significant association or weak associations between EMF exposure and health risks.

In 1999, the National Institute of Environmental Health Sciences (NIEHS) issued its final report on “Health Effects from Exposure to Power-Line Frequency Electric and Magnetic Fields” in response to the Energy Policy Act of 1992. NIEHS concluded that the scientific evidence linking EMF exposures with health risks is weak and that this finding does not warrant aggressive regulatory concern. However, because of the weak scientific evidence that supports some association between EMF and health effects, and the common exposure to electricity in the United States, passive regulatory action, such as providing public education on reducing exposures, is warranted.

Minnesota, California and Wisconsin have all recently conducted literature reviews or research to examine this issue. In 2002, Minnesota formed an Interagency Working Group to evaluate the body of research and develop policy recommendations to protect the public health from any potential problems resulting from HVTL EMF effects. The Working Group consisted of staff from various state agencies. The Working Group published its findings in a White Paper on EMF Policy and Mitigation Options (White Paper 1) in September 2002 (Minnesota Department of Health, 2002).

The findings of the Working Group are summarized below.

Research on the health effects of EMF has been carried out since the 1970s. Epidemiological studies have mixed results – some have shown no statistically significant association between exposure to EMF and health effects, some have shown a weak association. More recently, laboratory studies have failed to show such an association, or to establish a biological mechanism for how magnetic fields may cause cancer. A number of scientific panels convened by national and international health agencies and the United States Congress have reviewed the research carried out to date. Most researchers concluded that there is insufficient evidence to prove an association between EMF and health effects; however many of them also concluded that there is insufficient evidence to prove that EMF exposure is safe (White Paper 1).

The Minnesota Environmental Quality Board (EQB) addressed the matter of EMF with respect to new transmission lines in a number of separate dockets over the past few years [Docket Nos. 03-64-TR-XCEL (161 kV Lakefield line); 03-73-TR-Xcel (345 kV Buffalo Ridge line); 04-84-TR-XCEL (115 kV Buffalo to White line) and 04-81-TR-Air Lake-Empire (115 kV line in Dakota County)]. The findings of the EQB and the discussion in the Environmental Assessments prepared on each of those projects are pertinent to this issue with respect to the proposed Project. Documents from those matters are available on the Commission webpage: energyfacilities.puc.state.mn.us.

In June 2005, in Docket No. 03-73-TR-XCEL for the 345 kV Buffalo Ridge line, the EQB made the following findings with regard to EMF:

118. No significant impacts on human health and safety are anticipated from the Project. There is at present insufficient evidence to demonstrate a cause and effect relationship between EMF exposure and any adverse health effects. The EQB has not established limits on magnetic field exposure and there are no federal or Minnesota health-based exposure standards for magnetic fields. There is uncertainty, however, concerning long-term health impacts and the Minnesota Department of Health and the EQB all recommend a “prudent avoidance” policy in which exposure is minimized.

119. In previous routing proceedings, the EQB has imposed a permit condition on high voltage transmission line permits limiting electric field exposure to 8 kilovolts per meter (kV/m) at one meter above ground. This permit condition was designed to prevent serious hazard from shocks when touching large objects such as semi trailers or large farm equipment under extra HVTLs of 500 kV or greater. Predicted electric field densities are less than half of the 8 kV/m permit condition for both the 345 kV line and the 115 kV line.

7.3.2 Electric Fields

Graphs of the electric field at one meter above the ground for all structure types being considered in Segments 1 and 2, and Segments 3, 4 and 5 are provided below in Figures 7-3 and 7-4. As shown in the graphs, the maximum electric field is well below the 8 kV/m the EQB has imposed as a condition on other high voltage transmission line permits.

Figure 7-3

Electric Field - Segments 1 & 2 - Badoura Project Proposed Structures Pequot-Pine River and Pine River Badoura

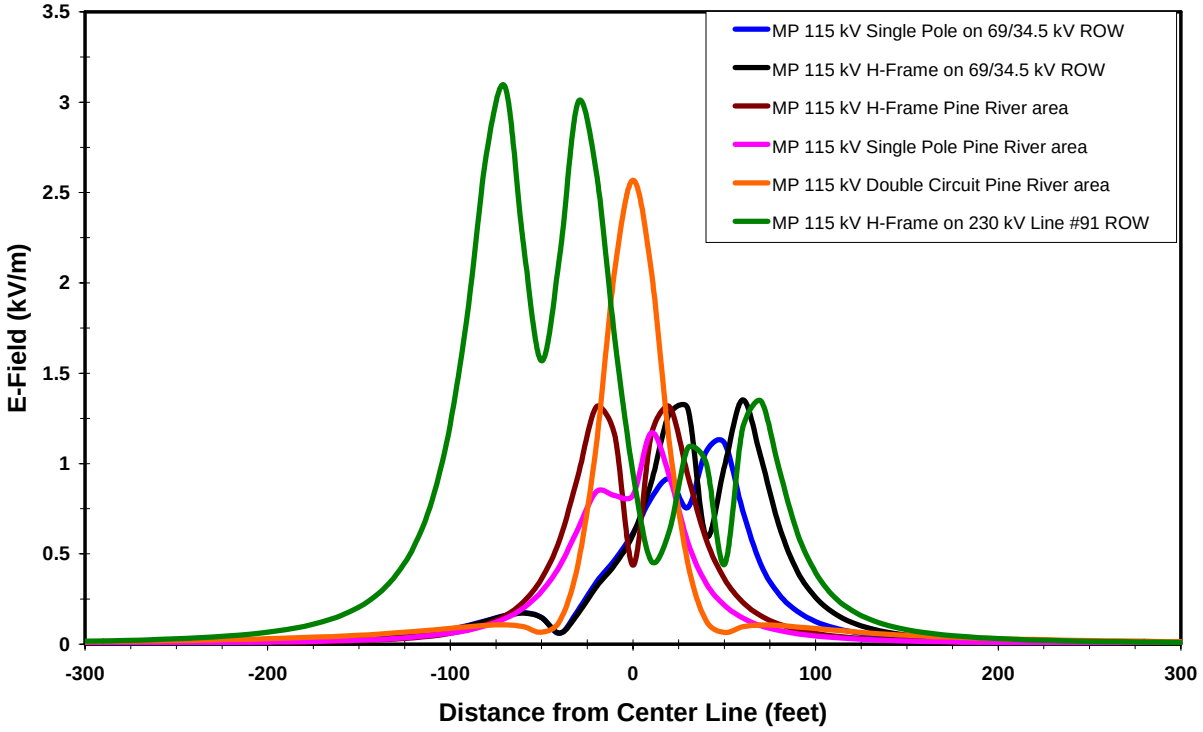

Figure 7-4

Electric Field - Segments 3, 4, & 5 - Badoura Project Proposed Structures Badoura-Long Lake and Badoura-Highway 371-Birch Lake

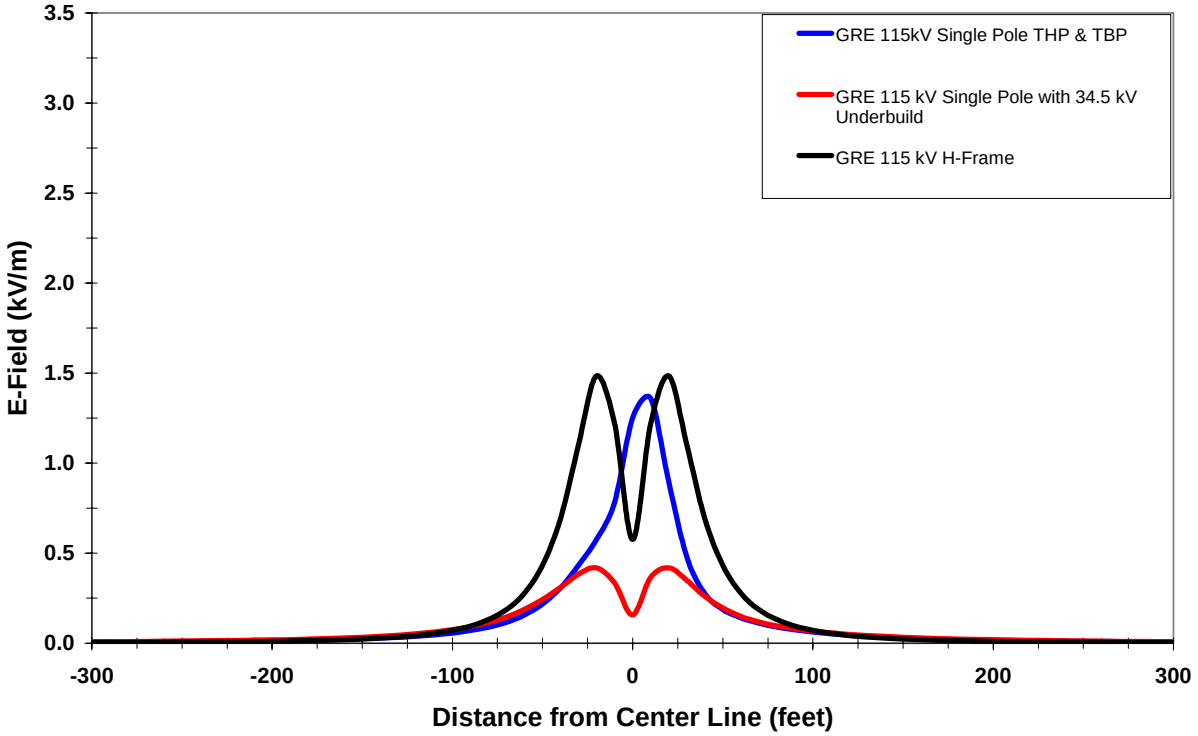

The electric field from a transmission line can couple with a conductive object, such as a vehicle or a metal fence, which is in close proximity to the line. This will induce a voltage on the object and the magnitude of this voltage is dependent on many factors, including the weather condition, object shape, object size, object orientation, object to ground resistance, object capacitance and location along the right-of-way. If these objects are insulated or semi-insulated from the ground, and a person touched them, a small current would pass through the person's body to the ground. This might be accompanied by a spark discharge and mild shock, similar to what can occur when a person walks across a carpet and touches a grounded object or another person.

The main concern with induced voltage on an object is not the level of the induced voltage, but the current flow through the person to ground if a person were to touch the object. To ensure that any discharge does not reach unsafe levels, the NESC requires that any discharge be less than 5 milliamperes (ma). Based on the Applicants' 115 kV transmission line operating experience, the discharge from any large mobile object such as a bus or truck parked under or adjacent to the line would be unlikely to reach levels considered to be an annoyance, and will be less than the 5 ma NESC limit. The Applicants would also assure that any fixed object, such as a fence or other large permanent conductive object in close proximity to or parallel to the line, would be grounded such that any discharge would be less than the 5 ma NESC limit.

High intensity electric fields can have adverse impacts on the operation of pacemakers and implantable cardioverter/defibrillator (ICD). Interference to implanted cardiac devices can occur if the electric field intensity is high enough to induce sufficient body currents to cause interaction.

Modern bipolar devices are much less susceptible to interactions with electric fields. Medtronic and Guidant, manufacturers of pacemakers and ICDs, have indicated that electric fields below 6 kV/meter are unlikely to cause interactions affecting operation of most of their devices.

Older unipolar designs are more susceptible to interference from electric fields. Research completed by Toivoen et al. (Toivoen et al., 1991) indicated that the earliest evidence of interference was in electric fields ranging from 1.2 to 1.7 kV/meter. The e-field graphs in Figures 7-3 and 7-4 show that the e-field for all structure and right-of-way alternatives are well below levels at which modern bipolar devices are susceptible to interactions with electric fields. For older style unipolar designs, the e-field for some structure types do exceed levels that Toivoen et al. has indicated may produce interference. However, a recent paper (Scholten et al., 2005) concludes that the risk of interference inhibition of unipolar cardiac pacemakers from high voltage power lines in everyday life is small. In the unlikely event a pacemaker is impacted, the effect is typically a temporary asynchronous pacing (commonly referred to as reversion mode or fixed rate pacing). The pacemaker would return to its normal operation when the person moves away from the source of the interference.

7.3.3 Magnetic Fields

The magnetic field profiles around the proposed lines for each structure and conductor configuration being considered for the Project are shown in Appendix D. Because the magnetic field is dependent on current flow, the expected magnetic field was calculated for each segment and two conditions; current flow at the conductor's thermal capacity and at expected normal peak current flow when the Project is placed in service. The magnetic field profile data show that magnetic field levels decrease rapidly (inverse square of the distance from source) from the centerline.

Because the magnetic field produced by the transmission line is dependent on the current flowing on its conductors, the actual magnetic field when the Project is placed in service will typically be less than shown in the graphs. This is because the graphs represent the magnetic field with current flow at the conductor's thermal limit and at expected normal peak current flow. Actual current flow on the line will vary as electric demand changes throughout the day and will be less than peak levels during most hours of the year.

As load growth occurs, the current flow on the line will increase, and because the magnetic field is directly related to current flow, the magnetic field will also increase. The graphs depicting the magnetic field at the conductor's thermal limits represent the maximum expected magnetic field because the current flow is at the conductor's capacity.

7.4 Ozone and Nitrogen Oxide Emissions

Corona, which may produce ozone and oxides of nitrogen, consists of an ionic or electrical discharge from the surface of a transmission line conductor. It occurs when the electric field intensity or surface gradient on the conductor exceeds the breakdown strength of air. For a 115 kV transmission line, the conductor surface gradient is usually below the air breakdown level. Some imperfection, such as loose conductor support hardware or water droplets, is necessary to cause corona. When corona occurs, it will be within a few centimeters or less immediately surrounding a conductor. Ozone also forms naturally in the lower atmosphere from lightning discharges and from reactions between solar ultraviolet radiation and air pollutants such as hydrocarbons from auto emissions.

The natural production rate of ozone is directly proportional to temperature and sunlight and inversely proportional to humidity. Therefore, humidity (or moisture), the same factor that increases corona discharges from transmission lines, inhibits the production of ozone. Ozone is a very reactive form of oxygen and combines readily with other elements and compounds in the atmosphere. Because of its reactivity, ozone is relatively short-lived.

On July 18, 1997 the Environmental Protection Agency (EPA) promulgated a regulation (62 Federal Register 38856) replacing the 1-hour ozone 0.12 parts per million (ppm)

standard with an 8-hour standard at a level of 0.08 ppm. The form of the 8-hour standard is based on the 3-year average of the annual fourth-highest daily maximum 8-hour average ozone concentrations measured at each monitor within an area. Calculations using the Bonneville Power Administration (BPA) *Corona and Field Effects Program Ver. 3* (USDOE, BPA, Undated) for a standard single circuit 115 kV project predicted a maximum concentration of 0.006 ppm near the conductor and 0.002 ppm at one meter above ground during foul weather or worst case conditions with rain at one inch per hour. During a mist (rain at 0.01 inch per hour) the maximum concentrations decreased to 0.0002 ppm near the conductor and 0.0001 ppm at one meter above ground level. For both cases, the ozone levels are below EPA standards.

Most calculations for the production and concentration of ozone assume high humidity or rain with no reduction in the amount of ozone due to oxidation or air movement. These calculations would therefore overestimate the amount of ozone that is produced and concentrated at ground level. Studies designed to monitor the production of ozone under transmission lines have generally been unable to detect any increase due to the transmission line facility.

7.5 Radio/TV Interference

Corona discharges from the conductors of a transmission line can occur when the voltage gradient in the vicinity of the conductors exceeds the breakdown strength of air. As mentioned previously, corona discharges can result in audible noise. In addition, the discharges can also result in radio frequency (RF) noise. Corona becomes more of an issue as the operating voltage of a line increases; however, the most significant factor with respect to radio and television interference is not the magnitude of the transmission line-induced RF noise, but how the transmission line-induced RF noise compares with the strength of the broadcast signal. Very few radio noise problems have resulted from existing 115 kV transmission lines, as broadcast signal strength within a radio station's primary coverage area is great enough that adequate signal to noise ratios are maintained.

If radio interference from transmission line corona does occur with AM radio stations presently providing good reception, satisfactory reception can be obtained by appropriate modification of (or addition to) the receiving antenna system.

Interference with FM broadcast station reception is generally not a problem because:

- corona-generated RF noise currents decrease in magnitude with increasing frequency and are quite small in the FM broadcast band (88-108 megahertz (MHz)), and
- excellent interference rejection properties inherent in FM radio systems make them virtually immune to amplitude type disturbances.

A two-way mobile radio located immediately adjacent to and behind a large metallic structure (such as a steel tower) may experience interference because of signal blocking effects. Movement of either mobile unit so that the metallic structure is not

immediately between the two units should restore communications. This would generally require a movement of less than 50 feet by the mobile unit adjacent to a metallic tower. Noise in the frequency range of cellular type phones is almost non-existent and the technology used by these devices is superior to that used in two-way mobile radio.

As in the case with AM radio interference, corona-generated noise could cause interference with TV picture reception because the picture is broadcast as an AM signal. The level of interference depends on the TV signal strength for a particular channel (TV audio is an FM signal typically not impacted by transmission line RF noise).

Due to the higher frequencies of the TV broadcast signal (54 MHz and above), 115 kV transmission lines seldom result in reception problems within a station's primary coverage area. In the rare situation that the proposed transmission line would cause TV interference within a broadcast station's primary coverage area where good reception is presently obtained, MP and GRE would work with the affected party to correct the problem. Usually any reception problem can be corrected with the addition of an outside antenna.

TV picture reception interference can also be the result of a transmission structure blocking the signal to homes in close proximity to a structure. Because the structures proposed for this Project would be wood (except in the immediate vicinity of the Pine River Substation), this is unlikely to occur. However, measurements can be made to verify whether a structure is the cause of reception problems. Reception problems can usually be corrected with the addition of an outside antenna, an amplifier, or both.

Loose and/or damaged hardware may also cause television or radio interference. If television or radio interference is caused by or from the operation of the proposed 115 kV line within a broadcast station's primary coverage area where good reception is presently obtained, MP and GRE will inspect and repair any loose or damaged hardware in the transmission line, or take other necessary action to restore reception to the present level.

8. PROPERTY/RIGHT-OF-WAY ACQUISITION AND RESTORATION

8.1 Identification of Existing Utility and Public Rights-of-Way

The proposed Project will follow and share existing utility and public right-of-way for 91 percent of the Proposed Route. Table 8-1 identifies the corridors shared by the Project.

Table 8-1 Shared Right-of-way—Badoura Project

Segment	Total Length (miles)	Existing Electric Utility Right-of-Way (miles)	Roadway Right-of-Way (miles)	Railroad Right-of-Way (miles)	New Right-of-Way (miles)
1	9.2	6.4	0.0	0.0	2.8
2	20.2	17.6	0.0	0.0	2.6
3	11.0	11.0	2.5	0.0	0.0
4	5.1	5.1	4.1	0.0	0.0
5	17.3	17.3	8.1	0.0	0.0

Existing easements along the Proposed Route may have to be renewed or revised and additional right-of-way will be needed for portions of each line segment.

8.1.1 Segments 1 and 2 - Pequot Lakes Substation to Pine River Substation to Badoura Substation

Segment 1

The line will exit the Pequot Lakes Substation to the north and then will turn west and share right-of-way with existing MP 34.5 kV and GRE 69 kV lines for approximately 2300 feet. It will then turn northerly paralleling the MP 34.5 kV line for approximately 2200 feet to the intersection with an existing 230 kV line (identified as the MP 91 Line). Up to 100 feet of additional right-of-way will be required for this section and existing easements will need to be amended.

The line will then turn northwest and share right-of-way with the MP 91 Line to an intersection with CSAH 1. The existing 215-foot MP 91 Line right-of-way allows for placement of a second circuit and will be adequate for the proposed 115 kV line design. The transmission structures will be placed on the north side of the existing right-of-way. Existing easements in this section will be reviewed and possibly amended.

The line will then parallel CSAH 1 to its termination point at the Pine River Substation (approximately 2.8 miles). An easement of up to 100 feet will be required for this section.

Segment 2
The new line will exit the Pine River Substation and travel south paralleling CSAH 1 (as 115 kV double circuit with the Pequot to Pine River 115 kV Line) for approximately 0.5 mile. It will then turn west and parallel CR 171 on its south side to its intersection with the MP 91 Line (approximately 2.5 miles). An easement of up to 100 feet will be required for this section.

The line will then proceed northwesterly and again share right-of-way with the MP 91 Line to its termination at the Badoura 115 kV Substation. The existing 215-foot MP 91 Line right-of-way allows for placement of a second circuit and will be adequate for the proposed 115 kV line design. The transmission structures will be placed on the north side of the existing right-of-way. Existing easements in this section will be reviewed and possibly amended.

8.1.2 Segments 3, 4 and 5 - Badoura Substation to TH 371, TH 371 to Birch Lake Substation, Badoura Substation to Long Lake Substation

Existing MP right-of-way, county roads and TH 371 will be used for Segments 3, 4 and 5 of the proposed Project.

Segment 3
Segment 3 will make use of centerline easements for the existing MP 507 Line that will be replaced. This distribution line is located close to 140th Street in Hubbard County and 16th Street in Cass County. These existing easements will need to be revised to incorporate a right-of-way width of up to 100 feet.

Segment 4
Segment 4 proceeds northerly paralleling TH 371 to its termination at the Birch Lake Substation in Hackensack. MP currently has relatively narrow (40-50 foot) easements for its 34.5 kV line along TH 371 in this segment; however, it is unknown at this time if there is sufficient room to accommodate the proposed 115 kV line within or parallel to this alignment. In addition, MNDOT has long-term plans to widen this section of TH 371, which further complicates routing in this area. The Applicants are reviewing the routing options within the 2000-foot corridor along this segment.

Segment 5
Segment 5 will replace an existing MP feeder and make use of existing right-of-way to the extent possible. This right-of-way parallels state and county roads for a large portion of its length. Existing easements will need to be revised and some new easements obtained. Depending on structure type, the easements will cover a right-of-way width of up to 100 feet.

8.2 Right-of-way Requirements

The right-of-way width requirement for this 115 kV transmission Project will range from 75 to 100 feet depending on structure design types. Single pole right-of-way

requirements could be reduced in certain higher density, developed areas. The required right-of-way width may also be less in areas where the new transmission line follows an existing linear corridor such as a road or trail. MP and GRE would seek a permanent easement, providing the right to construct, operate and maintain the transmission line, for the full width and length of the right-of-way. In some select areas, additional right-of-way may be needed to accommodate longer spans or other special design requirements identified during the final survey. Right-of-way width depends on conductor blowout and the recommended clearances to obstructions along the Proposed Route.

8.3 Property/Right-of-way Acquisition Procedures

Land rights acquisition will begin once approvals are received from the various state, federal and local agencies, and governmental units. Land rights include easement acquisition in the case of a transmission line, or acquisition of a fee interest for the proposed substation. As a general practice, landowners will be contacted to review Project details and to discuss the initial phase of the transmission Project, including survey and soil investigation. Upon completion of the survey and preliminary design, landowners will be contacted again and easement/fee acquisition negotiations will commence.

During the acquisition phase of the Project, landowners are given a copy of the conveyance documents generally including easements, deeds, structure design or photos, offer sheets, and a plan showing the proposed transmission line or facility relative to the landowner's property. Additional information may also be given to each landowner explaining power line safety, easement acquisition procedures, and damage settlement. In addition to permanent easements necessary for the construction of the line, temporary easements may be obtained from certain landowners for temporary construction, access, or staging areas for temporary storage of poles, vehicles, or other related items. Landowners will be notified in the event site access for soil boring is required to determine soil suitability in areas where certain soil characteristics may require special transmission structure design.

8.3.1 Segments 1 and 2 – Pequot Lakes Substation to Pine River Substation to Badoura Substation

MP will build most of Segments 1 and 2 of the new 115 kV transmission line using its existing easement rights in the 230 kV right-of-way (the current right-of-way is 215 feet wide). The exceptions are from the Pequot Lakes Substation to the MP 91 Line intersect, from where the MP 91 Line intercepts with CSAH 1 to the Pine River Substation in Segment 1, and from the Pine River Substation to the south side of CR 171 and on to where the line again intercepts the MP 91 Line in Segment 2.

In cases where additional rights are determined to be necessary, customary acquisition procedures will be followed for these rights. In cases where the existing rights are determined to be adequate, the affected property owners will be contacted and provided

with an explanation of MP's intentions regarding use of its easements. MP's right-of-way representatives will be available to discuss easement issues with all owners regardless of whether or not additional easement rights are necessary.

8.3.2 Segments 3, 4, and 5 – Badoura Substation to TH 371, TH 371 to Birch Lake Substation, Badoura Substation to Long Lake Substation

The existing MP distribution line right-of-way will be used for a majority of the 115 kV line from the Badoura Substation to TH 371, and from the Badoura Substation to the Long Lake Substation.

In cases where additional rights are determined to be necessary, customary acquisition procedures will be followed for these rights. In cases where the existing rights are determined to be adequate, the affected property owners will be contacted and provided with an explanation of GRE's intentions regarding use of the easements. GRE's right-of-way representatives will be available to discuss easement issues with all owners regardless of whether or not additional easement rights are necessary.

8.3.3 Substation Property Acquisition

MP and GRE/CWP have done site evaluations for substation additions in the Pine River area necessary to support the Project. Preliminary contact with the landowners has been made. If a route permit is issued, MP will proceed to obtain the necessary land rights for the facility through voluntary purchase. Condemnation will occur only if MP cannot work out an agreeable purchase price with the landowners.

During the substation construction phase, any affected property owners will be advised as to construction schedules or needed access to the site. To construct, operate and maintain the proposed substation, all vegetation will be cleared from the substation footprint area, from the substation driveway area, and from a buffer area of 20 feet outside the substation fence. Vegetation on the property outside of the substation footprint, driveway, and buffer will be left undisturbed, except where it must be removed to allow for transmission line. Landscaping will be provided to screen the substation.

8.4 Tree Clearing and Staking

After land rights have been secured, landowners will be contacted to discuss the initial construction phase of the Project, including schedules, ingress and egress to and from the planned facility, tree and vegetation removal, damage mitigation, and other related construction activities.

The first phase of construction activities will involve surveying the centerline of the new transmission line, followed by removal of trees and other vegetation from the right-of-way. As a general practice, low-growing brush or tree species are allowable at the outer limits of the easement area. Taller tree species that endanger the safe and reliable operation of the transmission facility are removed. In developed areas and to the extent

practical, existing low growing vegetation that will not pose a threat to the transmission facility or impede construction will remain in the easement area.

The second phase of construction will involve staking the location of structures, followed by structure installation and stringing of conductor wire.

The NESC states that “trees that may interfere with ungrounded supply conductors should be trimmed or removed.” Standard practices per specifications from the RUS indicate total removal of trees within the easement area, with additional trees and danger trees removed or trimmed beyond the easement area if they could fall into the energized transmission line as shown in Figure 8-1. Special tree trimming agreements are possible to minimize tree removal based on negotiations with individual landowners.

Figure 8-1 Standard Tree Removal Practices

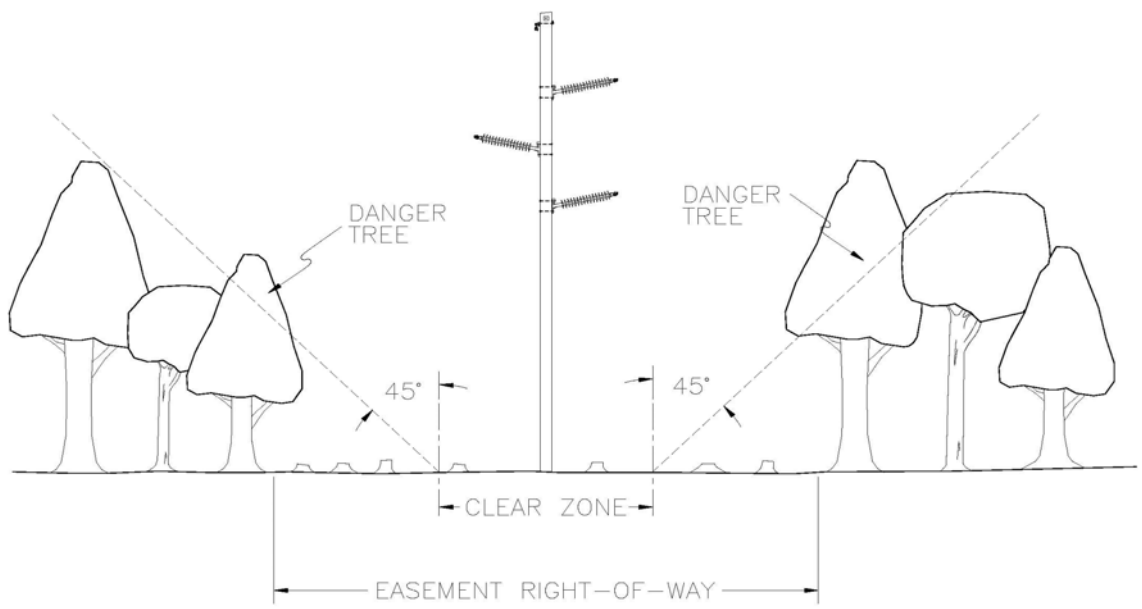

8.5 Right-of-Way Restoration

Upon completion of construction activities, landowners will be contacted to determine whether or not construction damages have occurred. Areas that sustain construction damage will be restored to their pre-construction condition to the extent possible. Landowners will be notified of the completion of the project, and asked to report any outstanding construction damage that has not been remedied or any other issue related to the construction of the transmission line.

9. CONSTRUCTION PRACTICES AND OPERATION AND MAINTENANCE OF THE HVTL AND ASSOCIATED SUBSTATIONS

9.1 Construction Practices

9.1.1 General

The construction of the transmission line will require the use of both renewable and non-renewable resources. The renewable resources consist of the wooden poles and the non-renewable resources consist of insulators, conductors, shield wires, and related hardware.

The proposed 115 kV transmission line would be constructed at existing grade elevations. Therefore, no pole locations would require grading unless it is necessary to provide a level area for construction access and activities.

MP and GRE design and construct transmission lines using the most cost-effective methods based on past experiences and practices and in compliance with the latest industry standards. MP and GRE typically use outside contractors for construction activities on large transmission line projects. The specifications used are developed by MP's and GRE's Engineering Services Departments.

Typical tangent structures will be wood, laminated wood, or steel direct- embedded poles. The structures will require a hole dug 10 to 15 feet deep with 3 to 4 feet diameter for each pole. Any excess soil will be distributed evenly near the site or removed, unless requested by landowners or others. The poles may be backfilled with native soils, crushed rock, or concrete depending on design conditions. In lowland areas, a galvanized steel culvert may also be inserted for pole stability due to poor soil capacity. Large angle structures will typically be self-supporting steel poles that will require a drilled pier foundation. The piers will typically have diameters of 4 to 8 feet. The hole may require a typical depth of 15 to 30 feet deep depending on design requirements. The piers will be filled with concrete delivered to the site by concrete trucks from a local batch plant.

Poles may be delivered to the staked location or to a designated marshalling yard depending on delivery and contractor availability. If the poles are delivered to a staked site, they are placed on the right-of-way out of the clear zone of any adjacent highways or designed pathways. The poles are typically framed with insulators and hardware on the ground, and then lifted and placed in the hole by a bucket truck or a crane, depending on the weight of the structure.

Once the structures have been erected, conductors are installed by establishing stringing setup areas within the right-of-way. These stringing setup areas are typically located every two miles along the project route. The conductors are pulled with a rope lead that connects to every structure through a dolly attached at the insulator location. Temporary guard or clearance poles are installed at crossings to provide adequate clearance over other utilities, streets, roads, highways, railroads, or other obstructions

after any necessary notifications are made or permit requirements met to mitigate any concerns with traffic flow or operations of other utilities.

In lowland areas, construction activities may occur during the winter season to mitigate any damage to wetland areas or to comply with required crossing permits. A pre-construction conference will outline any special requirements for the contractor prior to the start of any construction activities.

During construction, when temporary removal or relocation of fences may occur, installation of temporary or permanent gates may be required. GRE and MP right-of-way agents will coordinate with the landowners on replacement of fences and gates. As part of the easement restriction lists, the GRE contractor and MP crews will work around cultivated areas until harvest has occurred.

9.1.2 Pine River Substation

Construction of the new substation will begin once the final design is complete and the property is acquired. A detailed construction schedule will be developed based upon availability of crews, outage restrictions for any transmission lines that may be affected, weather conditions, spring load restrictions on roads, and any restrictions placed on certain areas for minimizing impacts from construction.

Approximately 2.5 acres of land will be graded to construct the substation. The concrete foundations will be poured to support the substation equipment and control house. Once the site is graded, a perimeter fence will be installed to secure the site and substation erection will commence.

MP will utilize erosion control methods to minimize runoff during substation construction. MP construction crews or an MP contractor will comply with local, state, NESC and MP standards regarding clearance to ground, clearance to crossing utilities, clearance to buildings, rights-of-way widths, erection of power poles, and stringing of transmission line conductors.

Upon completion of construction activities, MP will restore the site. Post-construction reclamation activities include the removing and disposing of debris, dismantling all temporary facilities (including staging areas), employing appropriate erosion control measures, and reseeding areas disturbed by construction activities with vegetation similar to that which was removed. Where appropriate, MP will incorporate methods to screen the final site.

MP will perform periodic inspections, maintain equipment, and make repairs over the life of the substation. MP will also conduct routine maintenance as required to remove undesired vegetation that may interfere with the safe and reliable operation of the substation.

9.1.3 Substation Upgrades

The proposed Project will affect five existing substations (Pequot Lakes, Pine River, Badoura, Birch Lake and Long Lake). All construction will be completed in accordance with MP and GRE construction standards as well as the NESC.

9.2 Operation and Maintenance

MP and GRE will periodically use their respective transmission line right-of-way to perform inspections, maintain equipment, and repair damage. Regular maintenance and inspections will be performed over the life of the facility to ensure a reliable system. Regular inspections will be done by foot, snowmobile, All-Terrain Vehicles, pickup truck, or by aerial means. These inspections will be limited to the acquired right-of-way and areas where obstructions or terrain require access off the easement.

MP and GRE will conduct vegetation surveys and remove undesired vegetation that will interfere with the operation of the transmission line. Frequency of vegetation maintenance is on a two to five year cycle. Right-of-way clearing practices include a combination of mechanical and hand clearing, along with an application of herbicides where allowed.

9.3 Work Force Requirements

During construction, there will be minimal impacts to community services, hotels and restaurants to support the utility personnel and contractors. It is estimated that 15 to 20 workers will be employed during construction of the Project.

It is not expected that additional permanent jobs would be created by this Project. The construction activities would provide seasonal influx of additional revenue into the communities during the construction phase, and materials such as concrete may be purchased locally.

10. AGENCY INVOLVEMENT, PUBLIC PARTICIPATION AND PERMITS/APPROVALS NEEDED

10.1 Agency Contacts

Several agencies were contacted for their input on the Project, including: the MDNR, SHPO, USFWS, USACE, MNDOT, NRCS and Tribal groups. All agency responses are provided in Appendix C.

10.2 Public Participation Opportunities

MP and GRE held several public meetings prior to and as a part of the submittal of the Certification Application (November 2005) and the Route Permit Application (February 2007). The dates and locations for the public information meetings and the Department of Commerce Environmental Report Scoping meeting are:

- July 13, 2005 — Pine River MP Office
- July 14, 2005 — Park Rapids MP Office
- October 5, 2005 — Backus City Hall
- December 7, 2005 — Environmental Report Scoping Meeting Backus City Hall
- March 28, 2006 — Public Hearing – Backus City Hall
- August 23, 2006 — Backus City Hall (Voluntary meeting held by MP and GRE)

The information meetings were an “Open House” arrangement that facilitated an informal opportunity for landowners to ask questions about any aspect of the Project.

10.3 Identification of Landowners

The names of each owner whose property is within the Proposed Route (Minn. Rules 4400.1150, Subp. 2G) are provided in Appendix E. There are a total of 443 landowners within the Proposed Route included in this Application. The list does not include landowners along the rejected route alternatives.

10.4 Required Permits and Approvals

Permits and approvals potentially required for the Project are provided in Table 10-1.

Table 10-1 Permits/Approvals That May Be Required

Permit	Jurisdiction
LOCAL APPROVALS	
Road Crossing Permits	County, Township, City
Lands Permits	County, Township, City
Building Permits	County, Township, City
Over-width Loads Permits	County, Township, City
Driveway/Access Permits	County, Township, City
STATE OF MINNESOTA APPROVALS	
Route Permit Application (Alternative Process)	Commission
Utility Permit (TH crossings)	MNDOT
License to Cross Public Waters	MDNR Division of Lands and Minerals
License to Cross State Lands	MDNR Division of Lands and Minerals
National Pollutant Discharge Elimination System (NPDES) Permit - Stormwater	MPCA
Section 401 Water Quality Certification	MPCA
FEDERAL APPROVALS	
Section 404 Approval	USACE

10.4.1 Local Approvals

Road Crossing Permits
These permits may be required to cross or occupy county, township and city road right-of-way.

Lands Permits
These permits may be required to occupy county, township and city lands, such as park lands, watershed districts and other properties owned by these entities.

Building Permits
These permits may be required by the local jurisdictions for substation modifications and construction.

Over-width Loads Permits
These permits may be required to move over-width loads on county, township or city roads.

Driveway/Access Permits
These permits may be required to construct access roads or driveways from county, township or city roadways.

10.4.2 State of Minnesota Approvals

Route Permit (Alternative Process)
A Route Permit under the Alternative Process requires the Applicants to be eligible as outlined in Minnesota Rules 4400.2000.

Utility Permit
A permit from the MNDOT is required for construction, placement or maintenance of utility lines to be placed adjacent or across the highway right-of-way. These permits would be acquired once the line design is completed.

License to Cross Public Waters/State Lands
The MDNR Division of Lands and Minerals regulates utility crossings over, under or across any state land or Public Waters identified on the Public Waters and Wetlands maps. A license to cross Public Waters is required under Minnesota Statute § 84.415 and Minnesota Rules Chapter 6135 (see letter of June 17, 2005, Appendix C). The Applicants work closely with the MDNR on these permits and would file for them once the line design is complete.

NPDES Permit
An NPDES permit is required for stormwater discharges associated with construction activities disturbing soil and equal to or greater than one acre. A requirement of the permit is to develop and implement a Stormwater Pollution Prevention Plan, which includes BMPs to minimize discharge of pollutants from the site. The Applicants would review the need for an NPDES permit for work at the Pine River Substation and other locations as may be required.

10.4.3 Federal Approvals

Section 404 Approval
The Applicants require Section 404 approval from the USACE when filling of a wetland or water of the United States is required. Section 404 approvals are not expected to be required for this Project.

Section 401 Certification
The Applicants require a Section 401 Water Quality Certification when federal approval for the Project is obtained (i.e., Federal Energy Regulatory Commission permits or a USACE Individual Permit).

11. SUMMARY OF FACTORS TO BE CONSIDERED IN EVALUATING THIS APPLICATION

MP and GRE have applied for a Route Permit for a 115 kV HVTL that is needed to meet the energy needs of their customers located in the Badoura project area. The HVTL's endpoints are the Pequot Lakes, Pine River, Badoura, Birch Lake, and Long Lake substations. Between those endpoints, a new/relocated Pine River Substation will be constructed.

The role of the Commission is to determine the best route to follow to accomplish those requirements, and to determine what mitigation efforts MP and GRE should employ to reduce any environmental consequences. Minn. Rules 4400.3150 lists 14 factors to consider in determining whether to issue a permit for the Proposed Route. Those factors are discussed briefly below.

A. Effects on human settlement, including but not limited to, displacement, noise, aesthetics, cultural values, recreation, and public services.

Effects of the Project on human settlement are discussed in Section 6.2 of this Application. The Proposed Route and associated substation construction would result in no displacement of existing residences. The noise from the HVTL and substation will be minimal (Section 6.2.3). A majority of the proposed line is along existing transmission line and roadway corridors and would have minimal aesthetic effects. The proposed HVTL and associated substation will have no impact on cultural values, recreation or public services. Impacts to socioeconomics would be primarily of a short-term, beneficial nature.

B. Effects on public health and safety.

The Project will be constructed to comply with RUS and NESC standards. Questions often arise about electric and magnetic fields (EMF), which are invisible lines of force that surround any electrical device. The term EMF refers to electric and magnetic fields and includes natural sources such as the earth's magnetic field or fields produced during thunder storms, as well as man-made fields produced by electric transmission lines, radio/TV stations, etc. The electric and magnetic fields associated with the Badoura Project are discussed in Section 7.3 of this Application (magnetic field profiles provided in Appendix D).

The transmission line meets the EQB standard imposing a maximum electric field limit of 8 kV per meter at one meter above ground. That standard was implemented to mitigate serious hazard from shocks when touching large objects parked under transmission lines with voltage of 500 kV or greater. The proposed 115 kV line will have a maximum magnitude of electric field density of just over 3 kV per meter underneath the conductors one meter above ground level. Research on the biological effects from electric fields on animals and humans has shown no significant association with disease in humans.

Magnetic fields result from the flow of electricity (current) in the transmission line. Recent studies of the health effects from power frequency fields conclude that the evidence of health risk related to magnetic fields is weak.

Because the magnetic field strength is dependent on current flow, it will continually change as electric use increases or decreases. Typically the magnetic field will increase over time because the current flowing on the line increases as load growth occurs. The maximum magnetic field for the Project as proposed will be limited by the line's conductors.

C. Effects on land-based economies, including but not limited to, agricultural, forestry, tourism, and mining.

Effects on land-based economies are discussed in Section 6.3 of this Application. No impacts to tourism or active sand and gravel mining operations will occur as a result of the Project. Approximately 0.05 acres of agricultural land will be permanently impacted by construction of the transmission line. If the Pine River Substation is relocated, less than 1.5 acres of agricultural land could be impacted. No forest-production areas (private or state-owned) will be affected by the Project. Approximately 133 acres of forested land/shelterbelts will be cleared along the right-of-way. Impacts to agricultural land and shelterbelts will be minimized by using existing corridors and locating poles adjacent to roadway right-of-way where practicable. MP and GRE will work with landowners to alleviate temporary impacts such as soil compaction following construction.

D. Effects on archaeological and historic resources.

The proposed Project is not expected to impact any archaeological sites or historic standing structures (Section 6.4 of the Application). Avoidance of archaeological and historic architectural properties is the preferred mitigative measure. The Applicants will work with SHPO during its review process to determine what areas may require surveys for the Project, and the Applicants will carry out the appropriate field identification and/or construction monitoring.

E. Effects on the natural environment, including effects on air and water quality resources and flora and fauna.

Effects of the Project on the natural environment are discussed in Sections 6.5 to 6.7 of this Application.

No significant impacts to air quality will result from the Project.

Short-term impacts to water quality resources could occur due to soil disturbance during construction. There is the possibility of sediment reaching surface waters during construction, as the ground is disturbed by grading (primarily at the substation sites)

and construction traffic. MP and GRE will implement BMPs such as silt fences to prevent sediment from entering surface waters.

Because the Proposed Route follows existing transmission and roadway right-of-way for the majority (91 percent) of its length, impacts to native, undisturbed flora will be avoided and/or minimized. Only trees and shrubs that would interfere with the safe operation of the line will be removed. Approximately 32 acres of tree clearing within existing easements will be required within the Badoura State Forest, and approximately 28 acres of tree clearing within existing easements will be required within the Foothills State Forest. These clearings will be necessary to construct and operate the proposed transmission line parallel to the existing line, and will not require expansion of existing easements.

There is minimal potential for the displacement of fauna and loss of habitat from construction of the Proposed Route. Wildlife that inhabit natural areas could be impacted in the short-term within the immediate area of construction. This impact will be temporary because similar habitat is adjacent to the sites.

F. Effects on rare and unique natural resources.

No impacts to special status species are expected as a result of this Project (Section 6.8 of the Application). The vast majority of the Project is along existing transmission line and/or roadway right-of-way; therefore impacts to previously undisturbed habitat (where the majority of rare species occur) will be avoided. Impacts to the blue heron rookery will be avoided by accessing the construction site via existing transmission line right-of-way.

G. Application of design options that maximize energy efficiencies, mitigate adverse environmental effects, and could accommodate expansion of transmission capacity.

There are no known or likely plans to add additional transmission capacity along the Proposed Route. Therefore, the design is appropriate to this Project and maximizes energy efficiency.

MP and GRE will work with affected landowners to use a design that mitigates the impact on them and the right-of-way.

The Pine River Substation will be laid out to accommodate additional equipment (such as additional transmission line terminations, capacitor banks, transformers, and related feeders) should significant load growth occur in the area. Although no specific plans have been made, construction of the site to accommodate future growth will eliminate the need for a new substation site in the future.

H. Use or paralleling of existing rights-of-way, survey lines, natural division lines, and agricultural field boundaries.

The Proposed Route uses or parallels existing rights-of-way where possible.

The MP portion of the Project (Segments 1 and 2) uses an existing 230 kV transmission line corridor and CWP's right-of-way between this corridor's intersection with CSAH 1 and the proposed Pine River Substation.

The GRE portion of the Project (Segments 3 through 5) follows existing roads and MP's distribution right-of-way.

I. Use of existing large electric power generating plant sites.

This criterion is not applicable.

J. Use of existing transportation, pipeline, and electrical transmission systems or rights-of-way.

See the comments under part H above.

K. Electrical system reliability.

The proposed Project will improve the electrical system reliability for the local distribution systems as well as for the transmission system. Distribution reliability is enhanced by providing new substation capacity in the vicinity of the load growth. This will provide need voltage support and ensure that voltage can be maintained within acceptable levels. In addition, the proposed Project will result in shorter distribution feeders. This will improve reliability by reducing exposure and providing the ability to back up other substations during unplanned or planned outages. The Project will also provide a much needed second 115 kV transmission source to the Long Lake and Pequot Lakes substations. This will improve transmission reliability and allow continued service to all electrical customers served from these substations if a 115 kV transmission line is out of service.

L. Costs of constructing, operating, and maintaining the facility which are dependent on design and route.

The cost of constructing, operating, and maintaining the facility along the Proposed Route is no higher, and is likely to be lower than along alternative routes. The Proposed Route relies on existing rights-of-way to the extent technically and economically feasible. This reduces the cost of acquiring easements and right-of-way preparation.

M. Adverse human and natural environmental effects which cannot be avoided.

The only identified environmental effects that cannot be avoided are primarily short-term during the construction of the line and substation. If any archeological sites are identified during placement of the poles along the Proposed Route or construction of the substation, the particular site will be avoided. Native vegetation will be maintained within the Proposed Route that is compatible with the operation and maintenance of the transmission line. If necessary, native species will be planted or seeded in areas that are devoid of native species. Soils will be revegetated as soon as possible to minimize erosion or some other method will be used during construction to prevent soil erosion. During construction temporary guard or clearance poles are installed at crossings to provide adequate clearance over other utilities, streets, roads, highways, railroads, or other obstructions after any necessary notifications are made or permit requirements met to mitigate any concerns with traffic flow or operations of other utilities.

N. Irreversible and irretrievable commitments of resources.

The Proposed Route does not require any irreversible or irretrievable commitment of resources. Should the line and/or substation be abandoned and removed at some time in the future, there is nothing related to their earlier placement that would prevent or require a different use of resources in the future.

12. REFERENCES

12.1 Text References

A & J Up North Buffalo Ranch. 2006. www.aandjupnorthbuffaloranch.com. Retrieved 8/2006.

City of Brainerd. 2005. *Paul Bunyan Trail*. http://paulbunyantrail.com. Retrieved 8/2006.

City of Pequot Lakes. 2006. *City Zoning Map*. Community Growth Institute. http://www.communitygrowth.com/client_files/documents//PL_map_zoning.pdf. Retrieved 9/2006.

City of Pine River. 1994. *Zoning Map*.

City of Pine River. 1980. *Pine River Municipal Airport Zoning Ordinances*.

Cass County. 2002. *Cass County Comprehensive Plan*. http://www.co.cass.mn.us/. Retrieved 6/2005.

Cass County. 2005. *Cass County Land Use Maps*. http://www.co.cass.mn.us/. Retrieved 6/2005.

Crow Wing County. 1996. *Crow Wing County Land Use Map.*

Crow Wing County. 2004. *Crow Wing County Comprehensive Plan*.

Explore Minnesota. 2006. *Lake Country Scenic Byway*. http://www.exploreminnesota.com/Lake_Country_Scenic_Byway_Small_Towns_Big_Attractions.html. Retrieved 6/2006.

Farm Services Agency. 2003. *Minnesota National Aerial Imagery Program 2003 Aerial Photos*. http://www.lmic.state.mn.us/chouse/naip03mrsid.html Retrieved 12/2003.

Haws, Katie. MDNR Non-game Wildlife Specialist, Northwest Region. Telephone conversation, January 18, 2007.

Institute of Electrical and Electronics Engineers, Inc. 2007. *National Electrical Safety Code (NESC) C2-2007.* http://standards.ieee.org/nesc/

Lake Country Scenic Byway Organization. 2006. *Forests.* http://www.lakecountryscenicbyway.com/amenities2/FS_12.htm?Text12.htm~textFrame1. Retrieved 8/2006.

Minnesota Department of Health. 2002. *EMF White Paper on Electric and Magnetic Field (EMF) Policy and Mitigation Options.*

Minnesota Department of Natural Resources (MDNR). *Ecological Classification System*. http://www.dnr.state.mn.us/ecs/index.html. Retrieved 6/10/2005.

MDNR, Forestry Division, 2002. GAP-based Land Cover - Vector. http://deli.dnr.state.mn.us/. Retrieved 1/2007.

MDNR. 2007. *Northern Minnesota Drift and Lake Plains Section.* http://www.dnr.state.mn.us/ecs/212N/index.html. Retrieved 2/7/2007.

MDNR. 2006. *Lake Finder*. http://www.dnr.state.mn.us/lakefind/index.html. Retrieved 6/10/2006.

MDNR. 2004. *Minnesota State Forest Boundaries*. http://deli.dnr.state.mn.us/. Retrieved 8/2003.

MDNR. 2004. *Minnesota State Trails*. http://deli.dnr.state.mn.us/. Retrieved 8/2004.

MDNR. 2004. *Minnesota Wildlife Management Areas*. http://deli.dnr.state.mn.us/. Retrieved 9/2004.

MDNR. 2004. *Scientific and Natural Area Boundaries*. http://deli.dnr.state.mn.us/. Retrieved 9/2004.

MDNR. 2005. *Recreation Compass*. http://www.dnr.state.mn.us/maps/compass. Retrieved 7/2006.

MDNR. 2005. *Animap: an Interactive Mapping Tool*. http://www.dnr.state.mn.us/maps/animap/index.html. Retrieved 6/2006.

MDNR. 2005. *Public Waters Inventory Maps and Lists*. http://www.dnr.state.mn.us/waters/watermgmt_section/pwi/maps.html. Retrieved 4/2006.

Minnesota Department of Trade and Economic Development. 2006. *Community Profile for Cass County, Minnesota*. http://www.mnpro.com/. Retrieved 6/2006.

Minnesota Department of Trade and Economic Development. 2006. *Community Profile for Hubbard County, Minnesota*. http://www.mnpro.com/. Retrieved 6/2006.

MnDOT. 2003. *General Highway Map: Crow Wing County, Minnesota.*

MnDOT. 2002. *General Highway Map: Cass County, Minnesota.*

MnDOT. 2001. *General Highway* Map: *Hubbard County, Minnesota.*

Minnesota Natural Heritage and Nongame Wildlife Program. 2006. *Threatened Natural Communities and Rare Species List.* St. Paul, MN: Minnesota Department of Natural Resources.

Minnesota Pollution Control Agency (MPCA). 2006. *Minnesota's Impaired Waters and Total Maximum Daily Loads (TMDL)*. http://www.pca.state.mn.us/water/tmdl/. Retrieved 5/2006.

MPCA. 2005. *Basins and Watersheds in Minnesota*. http://www.pca.state.mn.us/water/basins/. Retrieved 4/2005.

MPCA. 1999. *A Guide to Noise Control in Minnesota.*

MPCA. 1998. *Baseline Water Quality of Minnesota's Principal Aquifers – Region 2, North Central Minnesota.* Prepared by Ground Water Monitoring and Assessment Program. St. Paul, Minnesota.

Minnesota Pollution Control Agency. Undated. Minnesota Rules Chapter(7030) http://www.revisor.leg.state.mn.us/arule/7030/0040.html

Perry, D.E. 1972. "An Analysis of Transmission Line Audible Noise Levels Based upon Field and Three-Phase Test Line Measurements," IEEE Transactions on Power Apparatus and Systems, Vol. PAS-91, pp. 857-865.

Scholten, A., Joosten, S., and Silny, J. 2005. *Unipolar cardiac pacemakers in electromagnetic fields of high voltage overhead lines*. Journal of Medical Engineering and Technology 29(4):170-5.

Toivonen, L.; Valjus, J.; Hongisto, M.; Metso R. 1991. The influence of elevated 50 Hz electric and magnetic fields on implanted cardiac pacemakers: the role of the lead configuration and programming of the sensitivity. Pacing & Clinical Electrophysiology. 14:2114-2122.

U.S. Census Bureau. 2006. *State and County Quick Facts, Cass County, Minnesota*. http://quickfacts.census.gov/. Retrieved 1/2007.

U.S. Census Bureau. 2006. *State and County Quick Facts, Crow Wing County, Minnesota*. http://quickfacts.census.gov/. Retrieved 1/2007.

U.S. Census Bureau. 2006. *State and County Quick Facts, Hubbard County, Minnesota*. http://quickfacts.census.gov/. Retrieved 1/2007.

U.S. Census Bureau. 2000. *Detailed Tables*. http://factfinder.census.gov/. Retrieved 5/2006.

U.S. Department of Agriculture. 2002. *Census of Agriculture, State and County Reports*. http://www.nass.usda.gov/census/. Retrieved 6/2006.

U.S. Department of Agriculture. 2004. "County Highlights." *Minnesota Agricultural Statistics*. http://www.nass.usda.gov/mn/Agstat04/agstat04.htm#County%20Highlights. Retrieved 6/2006.

U.S. Department of Agriculture, Economic Research Service. 2005. http://www.ers.usda.gov/. Retrieved 8/2005.

U.S. Department of Agriculture, Natural Resources Conservation Service. 2005. *Soil Data Mart.* http://SoilDataMart.nrcs.usda.gov/. Retrieved 6/2006.

U.S. Department of Agriculture, Natural Resources Conservation Service. 1994. *State Soil Geographic (STATSGO) Data Base for Minnesota.* Fort Worth, Texas: U.S. Department of Agriculture, Natural Resources Conservation Service.

United States Department of Agriculture. Revised 2005. REA Bulletin 1724E-200. *Design Manual for High Voltage Transmission Lines.*

United States Department of Agriculture, Soil Conservation Service. 1997. *Soil Survey of Cass County, Minnesota.*

United States Department of Agriculture, Soil Conservation Service. 2006. *Soil Survey of Crow Wing County, Minnesota* (Preliminary data obtained from Crow Wing County NRCS office).

United States Department of Agriculture, Soil Conservation Service. 2003. *Soil Survey of Hubbard County, Minnesota.*

United States Department of Energy, Bonneville Power Administration. Undated. *Corona and Field Effects Program Version 3.0 Computer Program (Public Domain Software).* BPA, P.O. Box 491-ELE, Vancouver, WA 98666.

U.S. Fish and Wildlife Service. 2005. *National Wetlands Inventory*. St. Petersburg, FA: U.S. Fish and Wildlife Service.

United States Geological Survey (USGS). 2005. *24k Topographic Quadrangle Maps.* http://deli.dnr.state.mn.us/. Retrieved 6/2005.

USGS. 1972. *Water Resources of the Cow Wing River Watershed, Central Minnesota*. Washington, D.C.

USGS. 1968. *Water Resources of the Mississippi Headwaters Watershed, North-Central Minnesota*. Washington, D.C.

12.2 Map Data Sources

MDNR. 2004. *Minnesota State Parks Boundaries*. http://deli.dnr.state.mn.us/. Retrieved 8/2003.

MDNR. 2004. *Public Waters Inventory Maps: Draft ArcView shapefiles from DNR FTP site.* ftp://ftp.dnr.state.mn.us/pub/dow/pwibasins/. Retrieved 6/2004.

MnDOT. 2001. *Mn/DOT BaseMap 2001.* Acquired February 2004 http://www.dot.state.mn.us/tda/basemap/metadata/Roads.html

U.S. Department of Agriculture, Farm Services Agency, Aerial Photography Field Office. 2003. *National Agricultural Imagery Program (NAIP) Digital Ortho-rectified Images (DOQ), Minnesota.* Acquired February 2004 http://www.lmic.state.mn.us/chouse/naip03mrsid.html