APPENDIX D
Magnetic Field Profiles

SEGMENT 1: Pequot Lakes Substation Area (M.P. 115kV Single Pole On Shared ROW With GRE 69kV w/Underbuild)

69kV TSZ-1 Single Pole Structure w/34.5kV Underbuild

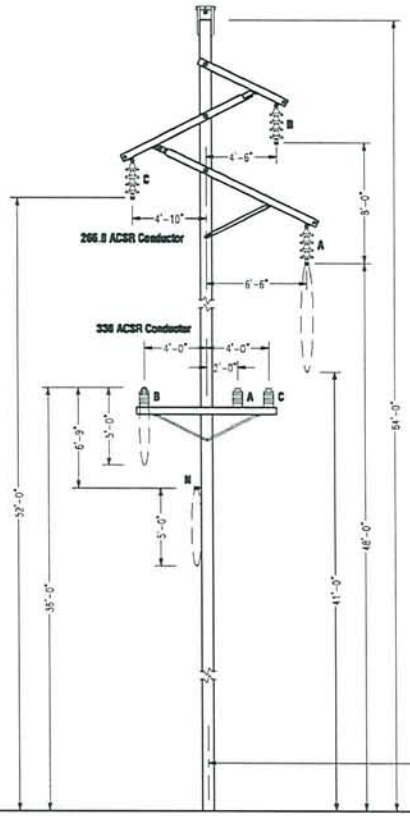

115kV Transmission Single Pole Structure

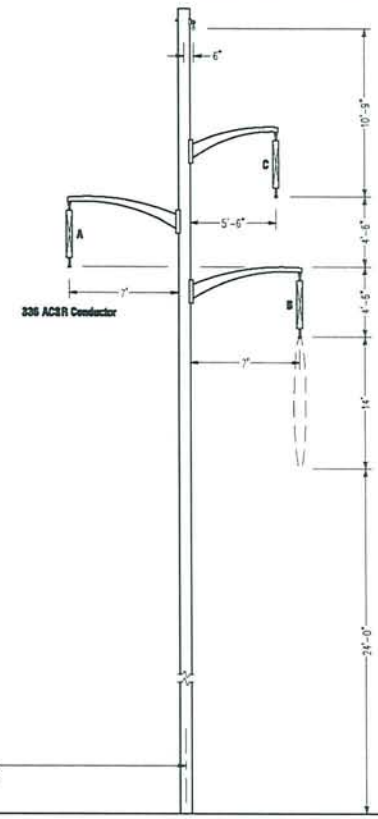

- 69kV LINE -

At Conductor Thermal Load		At Normal Peak Load	
– Phase A –		– Phase A –	
Voltage (kV)	Volt. Ph. Angle	Voltage (kV)	Volt. Ph. Angle
69	0°	69	0°
Current (amps)	Current Angle	Current (amps)	Current Angle
492	10°	49	10°

- 34.5kV LINE -

At Conductor Thermal Load		At Normal Peak Load	
– Phase A –		– Phase A –	
Voltage (kV)	Volt. Ph. Angle	Voltage (kV)	Volt. Ph. Angle
34.5	330°	34.5	330°
Current (amps)	Current Angle	Current (amps)	Current Angle
572	1°	114	1°

- 115kV LINE -

At Conductor Thermal Load		At Normal Peak Load	
– Phase A –		– Phase A –	
Voltage (kV)	Volt. Ph. Angle	Voltage (kV)	Volt. Ph. Angle
115	0°	115	0°
Current (amps)	Current Angle	Current (amps)	Current Angle
914	342°	161	342°

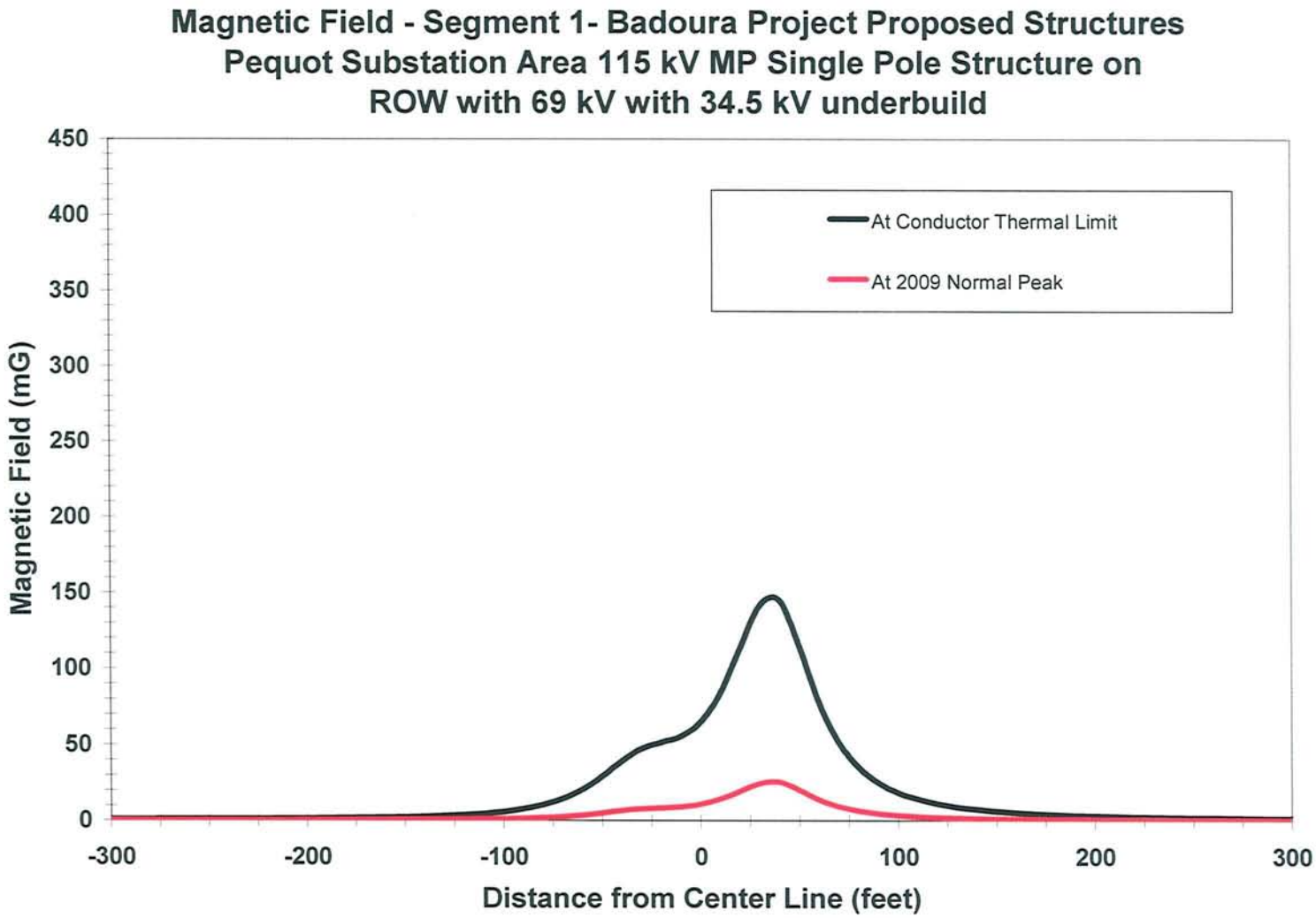
Magnetic Field - Segment 1- Badoura Project Proposed Structures
Pequot Substation Area 115 kV MP Single Pole Structure on
ROW with 69 kV with 34.5 kV underbuild
At Conductor Thermal Limit
At 2009 Normal Peak
Magnetic Field (mG)
450
400
350
300
250
200
150
100
50
0
-300
-200
-100
0
100
200
300
Distance from Center Line (feet)

SEGMENT 1: Pequot Lakes Substation Area (M.P. 115kV H-Frame On Shared ROW With GRE 69kV w/Underbuild)

69kV TSZ-1 Single Pole Structure w/34.5kV Underbuild

115kV Transmission H-Frame Structure

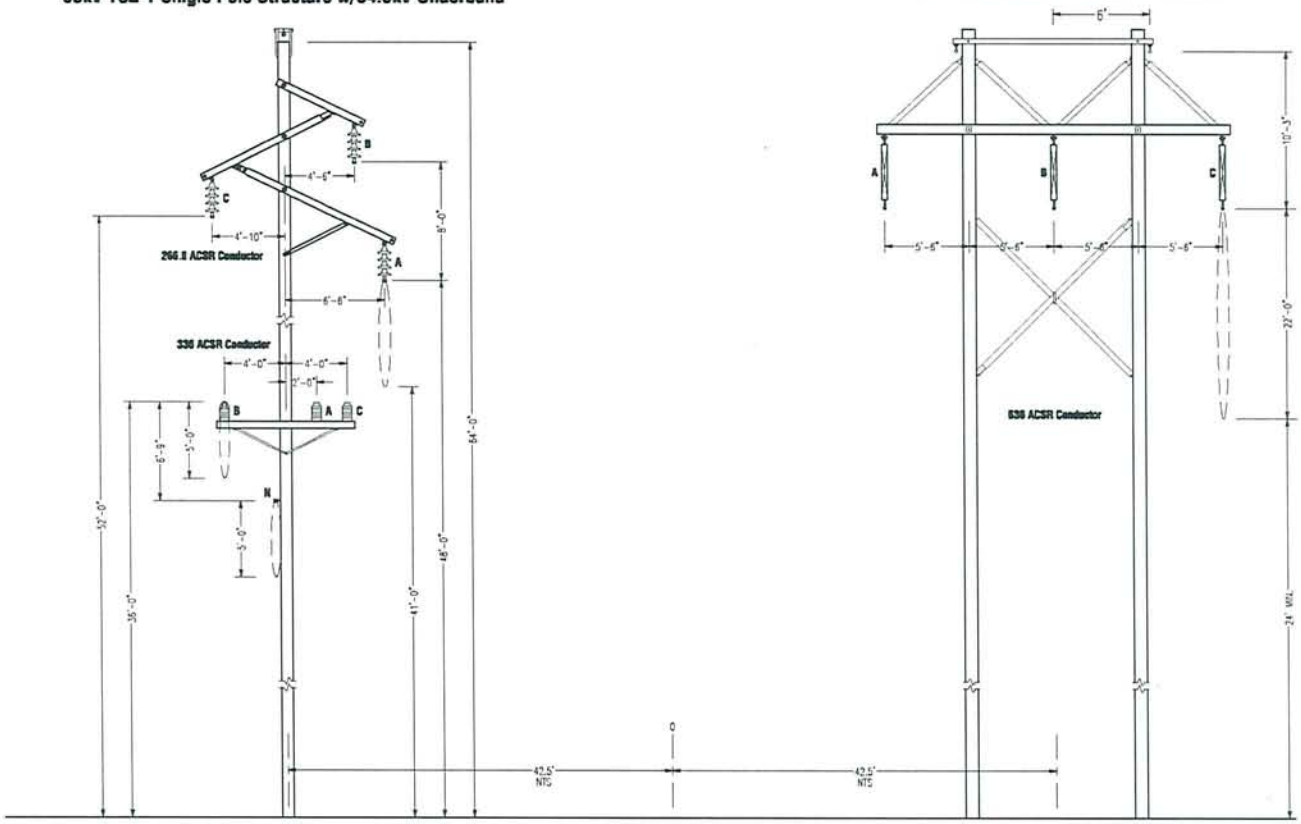

- 69kV LINE -

At Conductor Thermal Load		At Normal Peak Load	
– Phase A –		– Phase A –	
Voltage (kV)	Volt. Ph. Angle	Voltage (kV)	Volt. Ph. Angle
69	0°	69	0°
Current (amps)	Current Angle	Current (amps)	Current Angle
492	10°	49	10°

- 34.5kV LINE -

At Conductor Thermal Load		At Normal Peak Load	
– Phase A –		– Phase A –	
Voltage (kV)	Volt. Ph. Angle	Voltage (kV)	Volt. Ph. Angle
345	330°	345°	330°
Current (amps)	Current Angle	Current (amps)	Current Angle
572	1°	114	1°

- 115kV LINE -

At Conductor Thermal Load		At Normal Peak Load	
– Phase A –		– Phase A –	
Voltage (kV)	Volt. Ph. Angle	Voltage (kV)	Volt. Ph. Angle
115	0°	115	0°
Current (amps)	Current Angle	Current (amps)	Current Angle
914	342°	161	342°

Magnetic Field - Segment 1 - Badoura Project Proposed Structures
Pequot Substation Area 115 kV MP H-Frame on
Shared ROW with 69 kV with 34.5 kV underbuild

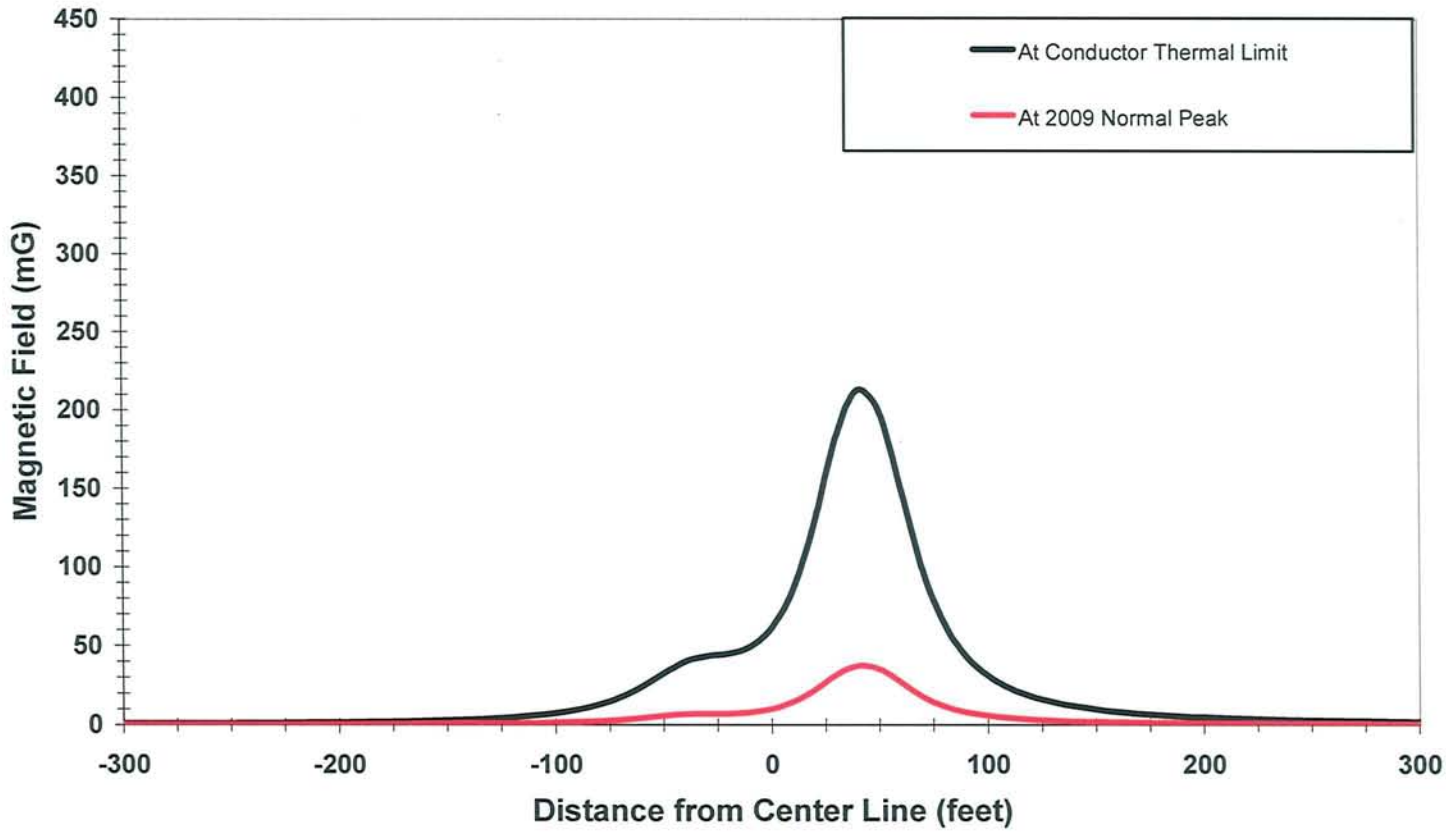

230kV Transmission H-Frame Structure

-SEGMENT 1: Pequot Lakes to Pine River (Shared ROW with MP 230kV Line #91)-

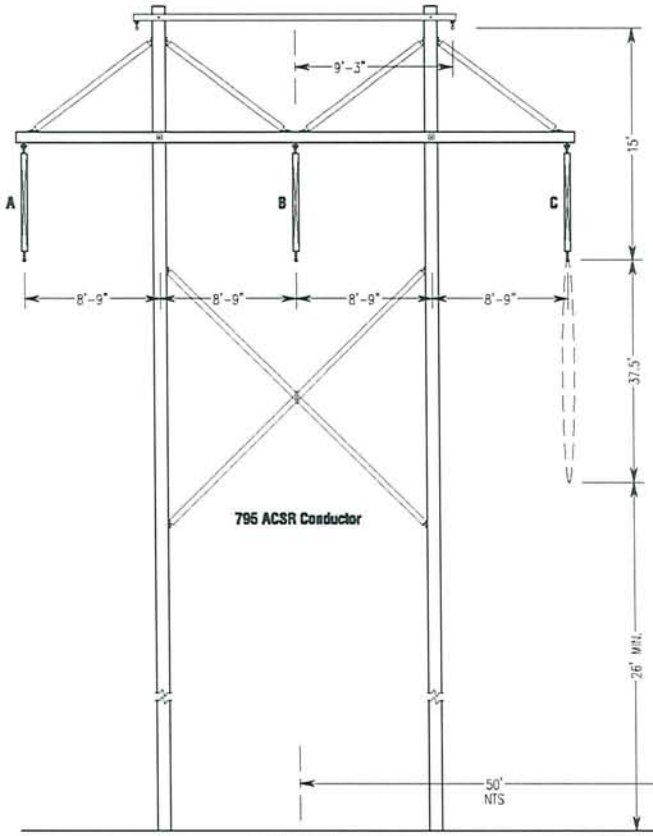

115kV Transmission H-Frame Structure

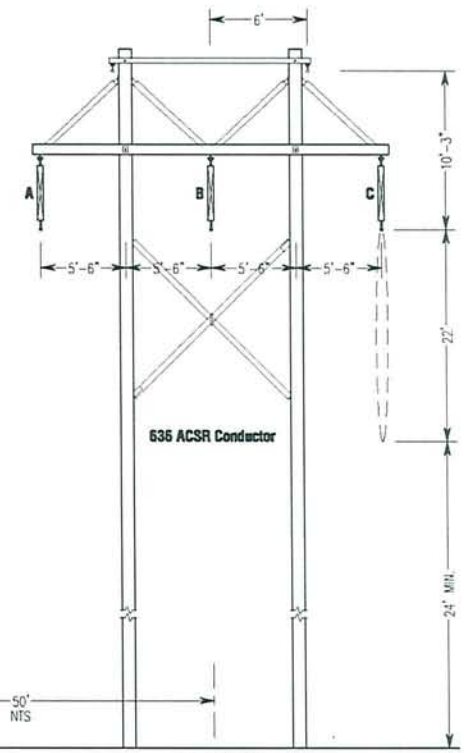

- 230kV LINE -

At Conductor Thermal Limit		At Normal Peak Load	
- Phase A -		- Phase A -	
Voltage (kV)	Volt. Ph. Angle	Voltage (kV)	Volt. Ph. Angle
230	0°	230	0°
Current (amps)	Current Angle	Current (amps)	Current Angle
821	350°	412	350°

- 115kV LINE -

At Conductor Thermal Limit		At Normal Peak Load	
- Phase A -		- Phase A -	
Voltage (kV)	Volt. Ph. Angle	Voltage (kV)	Volt. Ph. Angle
115	0°	115	0°
Current (amps)	Current Angle	Current (amps)	Current Angle
914	342°	161	342°

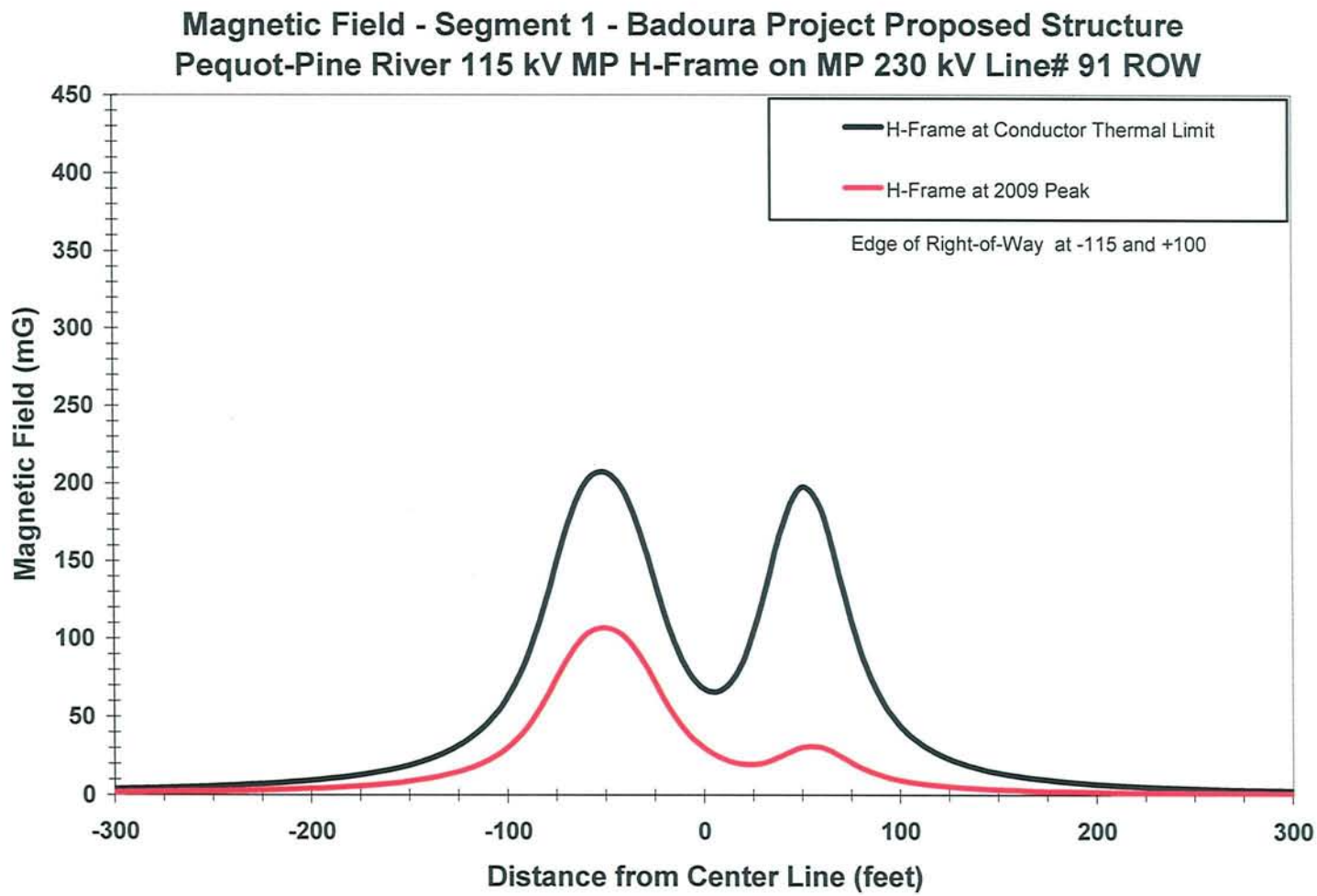
Magnetic Field - Segment 1 - Badoura Project Proposed Structure
Pequot-Pine River 115 kV MP H-Frame on MP 230 kV Line# 91 ROW
H-Frame at Conductor Thermal Limit
H-Frame at 2009 Peak
Edge of Right-of-Way at -115 and +100
Magnetic Field (mG)
450
400
350
300
250
200
150
100
50
0
-300
-200
-100
0
100
200
300
Distance from Center Line (feet)

SEGMENT 1: Pequot Lakes to Pine River - M.P. 115kV H-Frame Structure

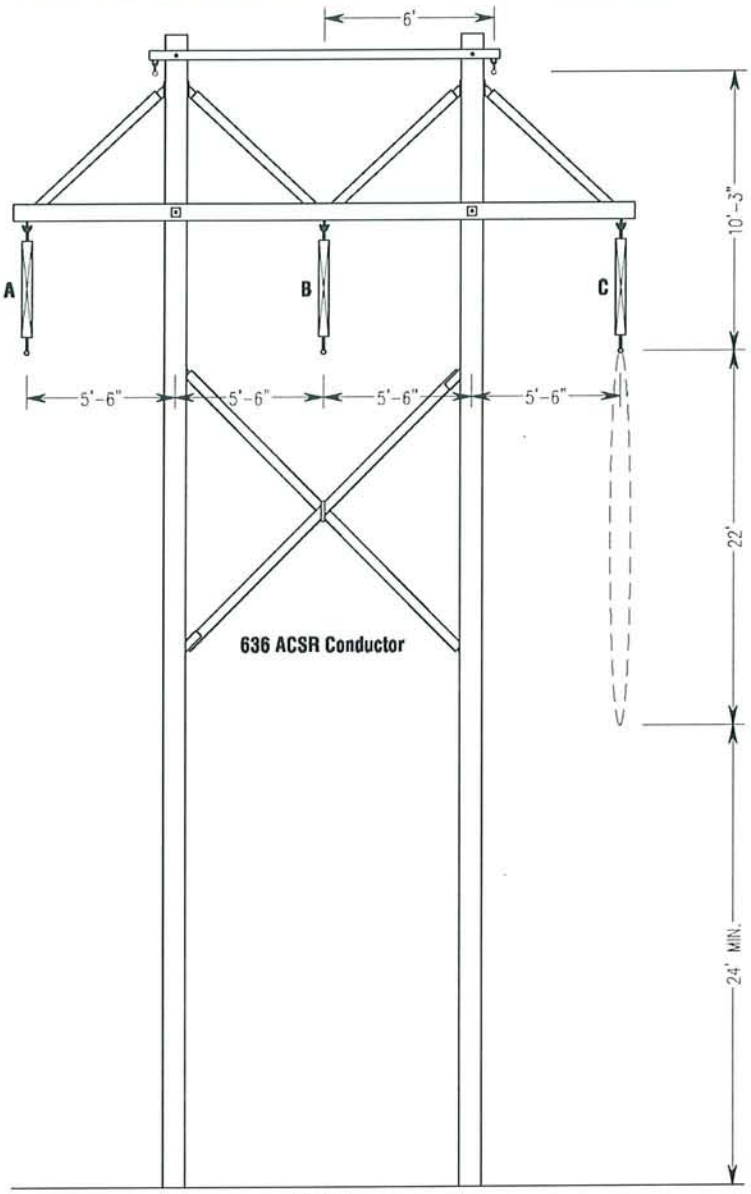

- 115kV -

At Conductor Thermal Limit		At Normal Peak Load	
- Phase A -		- Phase A -	
Voltage (kV)	Voltage Phase Angle	Voltage (kV)	Voltage Phase Angle
115	0°	115	0°
Current (amps)	Current Angle	Current (amps)	Current Angle
914	342°	161	342°

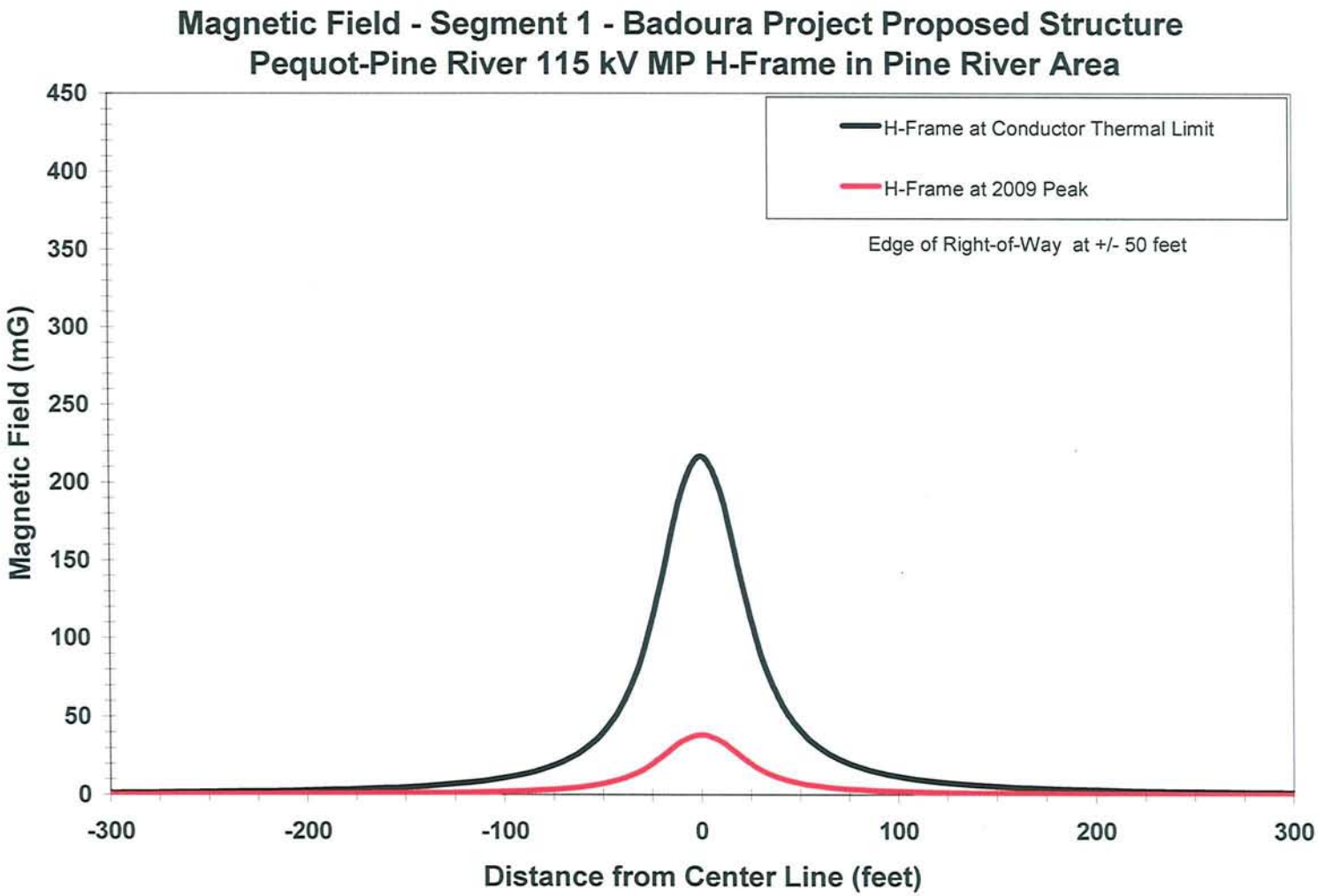
Magnetic Field - Segment 1 - Badoura Project Proposed Structure
Pequot-Pine River 115 kV MP H-Frame in Pine River Area
H-Frame at Conductor Thermal Limit
H-Frame at 2009 Peak
Edge of Right-of-Way at +/- 50 feet
Magnetic Field (mG)
450
400
350
300
250
200
150
100
50
0
-300
-200
-100
0
100
200
300
Distance from Center Line (feet)

SEGMENT 1: Pequot Lakes to Pine River - M.P. 115kV Single Pole Structure

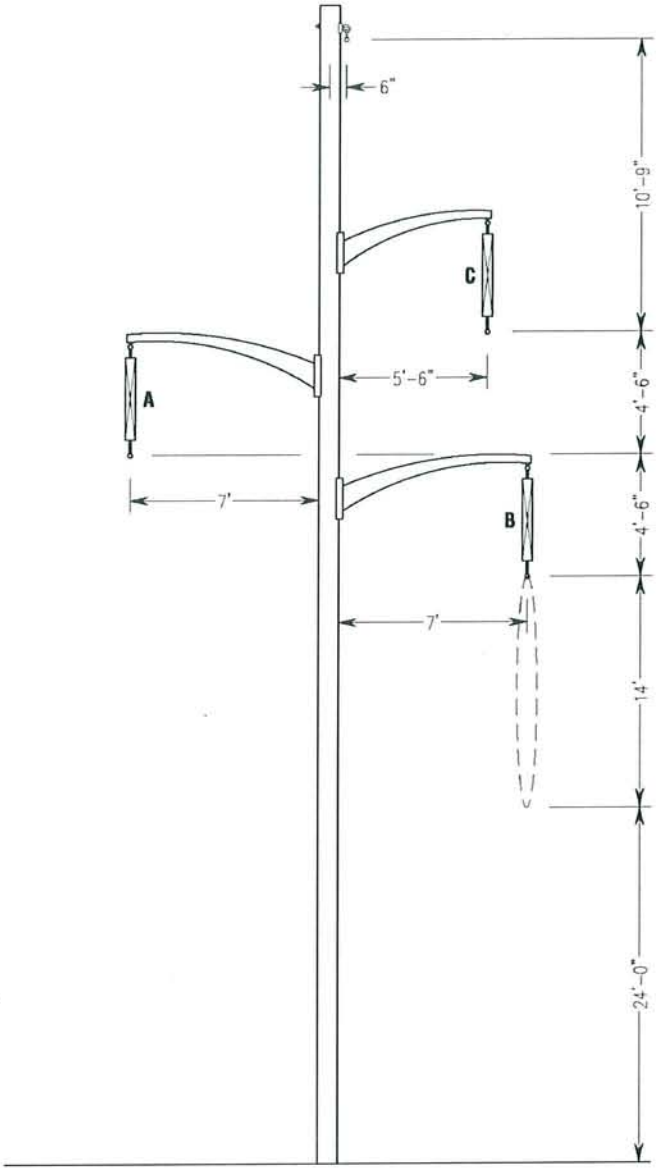

At Conductor Thermal Limit		At Normal Peak Load	
- Phase A -		- Phase A -	
Voltage (kV)	Voltage Phase Angle	Voltage (kV)	Voltage Phase Angle
115	0°	115	0°
Current (amps)	Current Angle	Current (amps)	Current Angle
914	342°	161	342°

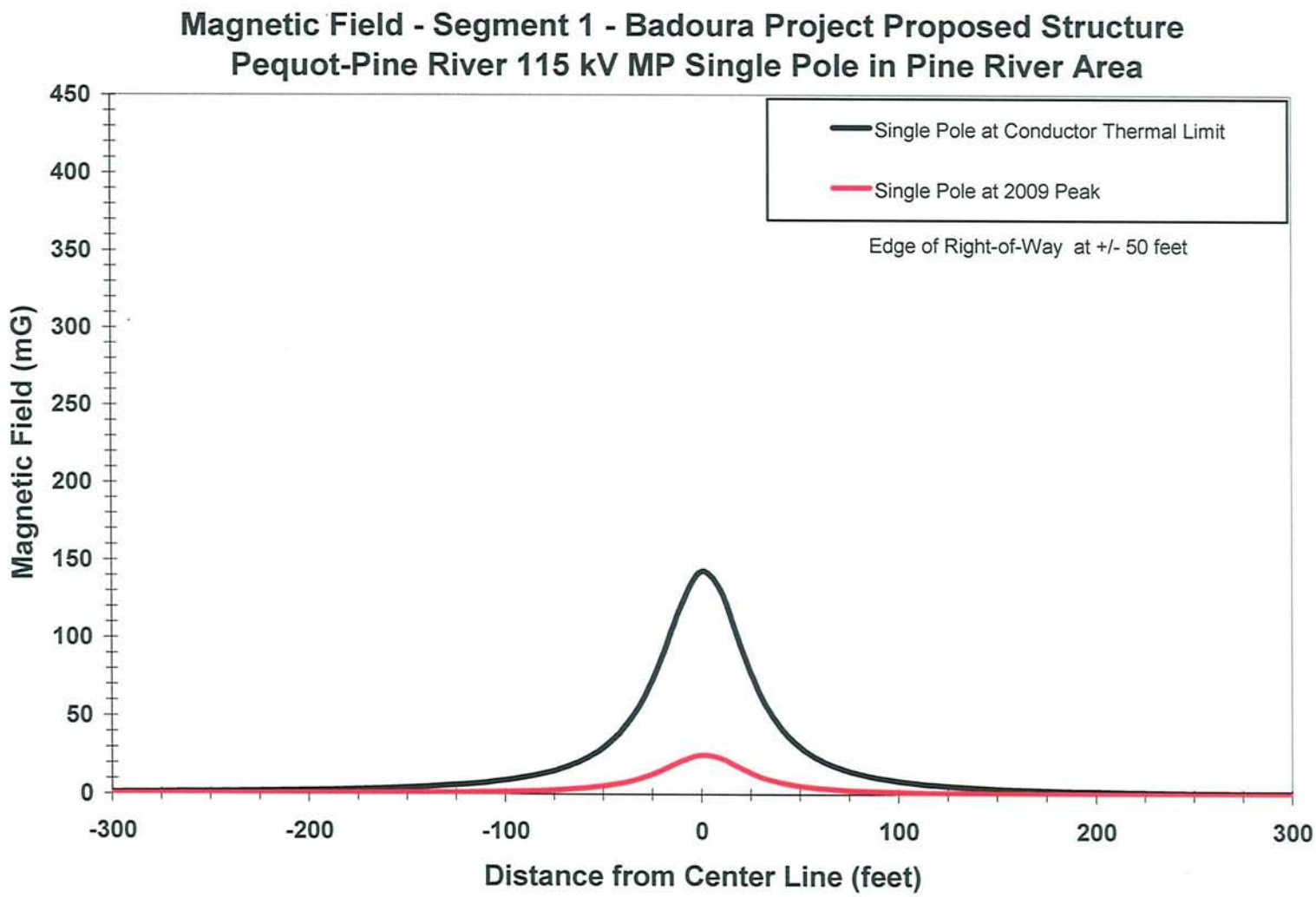
Magnetic Field - Segment 1 - Badoura Project Proposed Structure
Pequot-Pine River 115 kV MP Single Pole in Pine River Area
Single Pole at Conductor Thermal Limit
Single Pole at 2009 Peak
Edge of Right-of-Way at +/- 50 feet
Magnetic Field (mG)
450
400
350
300
250
200
150
100
50
0
-300
-200
-100
0
100
200
300
Distance from Center Line (feet)

SEGMENTS 1 & 2: 115kV Double Circuit Structure - Pine River Substation Area

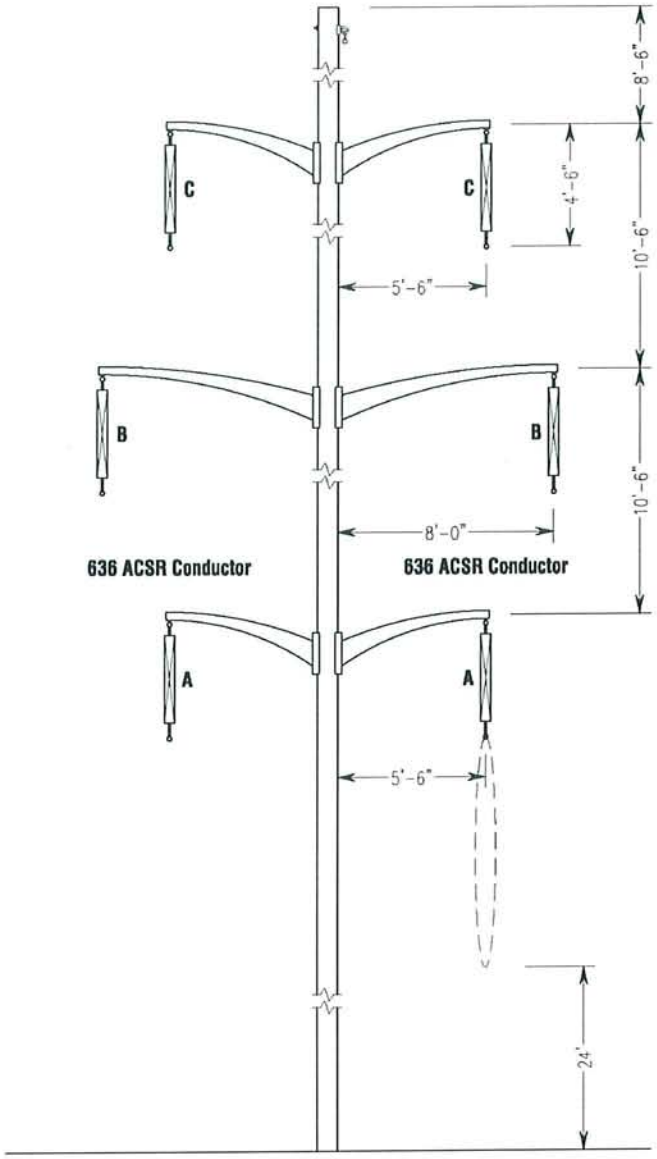

- TO BADOURA -				- TO PEQUOT LAKES -			
At Conductor Thermal Limit		At Normal Peak Load		At Conductor Thermal Limit		At Normal Peak Load	
– Phase A –		– Phase A –		– Phase A –		– Phase A –	
Voltage (kV)	Volt. Ph. Angle	Voltage (kV)	Volt. Ph. Angle	Voltage (kV)	Volt. Ph. Angle	Voltage (kV)	Volt. Ph. Angle
115	0°	115	0°	115	0°	115	0°
Current (amps)	Current Angle	Current (amps)	Current Angle	Current (amps)	Current Angle	Current (amps)	Current Angle
914	320°	110	320°	914	162°	161	162°

Magnetic Field - Segments 1 & 2 - Badoura Project
Proposed Structure Double Circuit 115 kV
Area of Pine River Substation

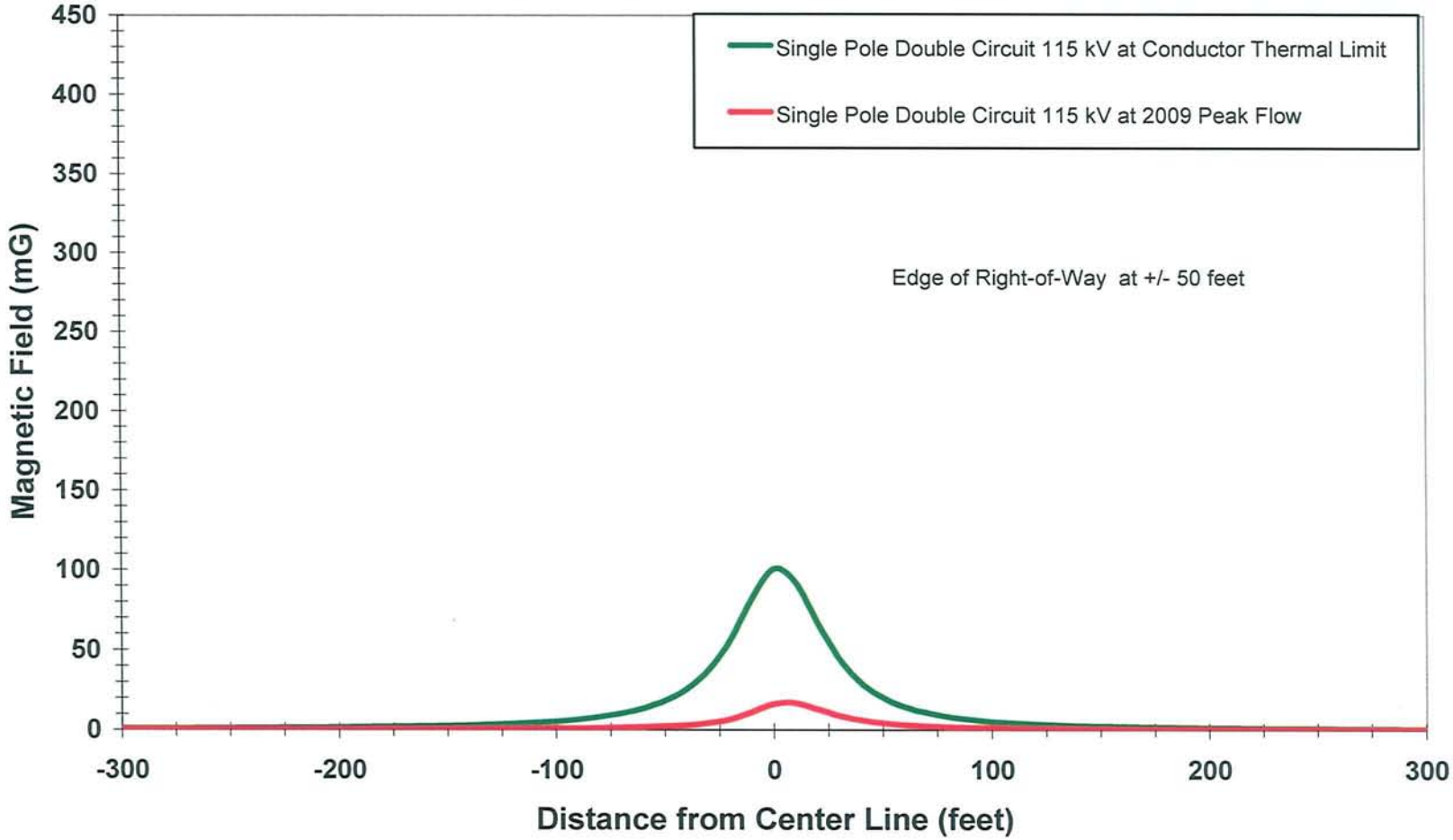

SEGMENT 2: Pine River to Badoura - M.P. 115kV H-Frame Structure

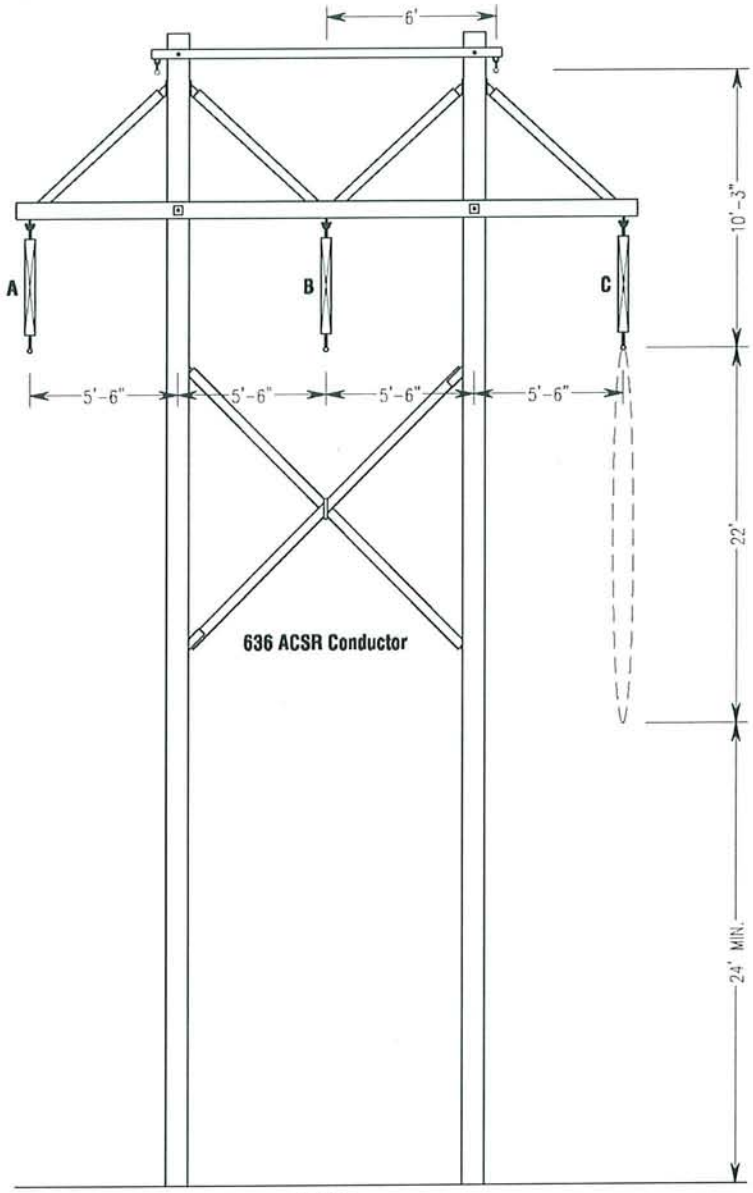

- 115kV -

At Conductor Thermal Limit		At Normal Peak Load	
– Phase A –		– Phase A –	
Voltage (kV)	Voltage Phase Angle	Voltage (kV)	Voltage Phase Angle
115	0°	115	0°
Current (amps)	Current Angle	Current (amps)	Current Angle
914	320°	110	320°

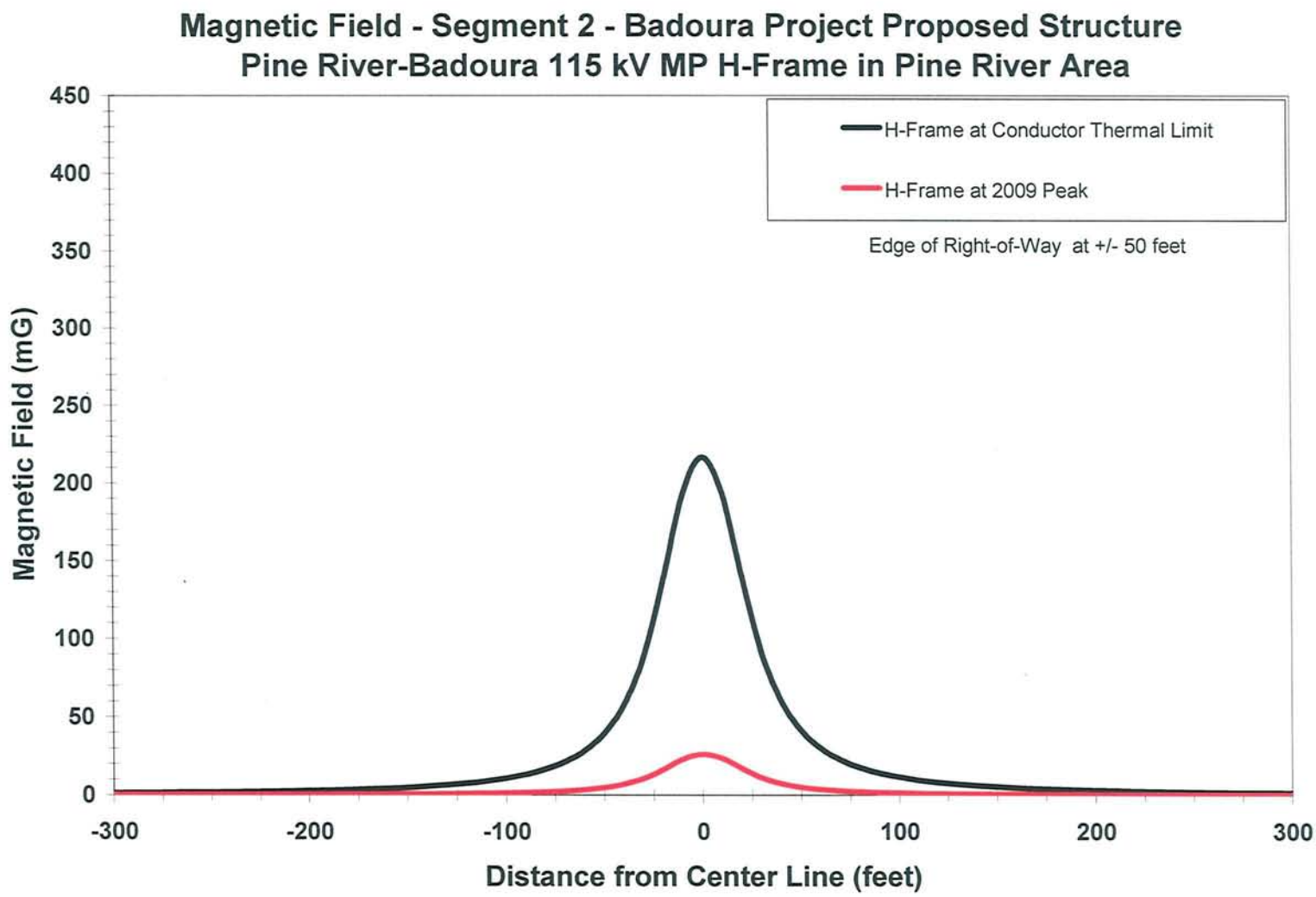
Magnetic Field - Segment 2 - Badoura Project Proposed Structure
Pine River-Badoura 115 kV MP H-Frame in Pine River Area
H-Frame at Conductor Thermal Limit
H-Frame at 2009 Peak
Edge of Right-of-Way at +/- 50 feet
Magnetic Field (mG)
450
400
350
300
250
200
150
100
50
0
-300
-200
-100
0
100
200
300
Distance from Center Line (feet)

SEGMENT 2: Pine River to Badoura - M.P. 115kV Single Pole Structure

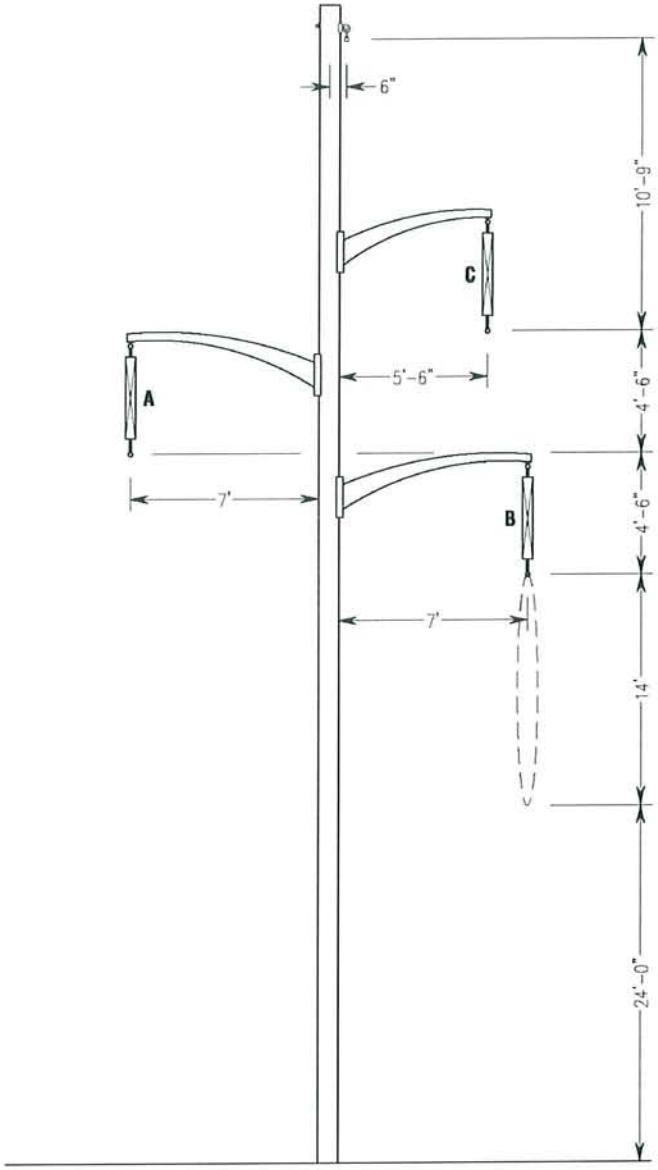

At Conductor Thermal Limit		At Normal Peak Load	
– Phase A –		– Phase A –	
Voltage (kV)	Voltage Phase Angle	Voltage (kV)	Voltage Phase Angle
115	0°	115	0°
Current (amps)	Current Angle	Current (amps)	Current Angle
914	320°	110	320°

Magnetic Field - Segment 2 - Badoura Project Proposed Structure
Pine River-Badoura 115 kV MP Single Pole in Pine River Area

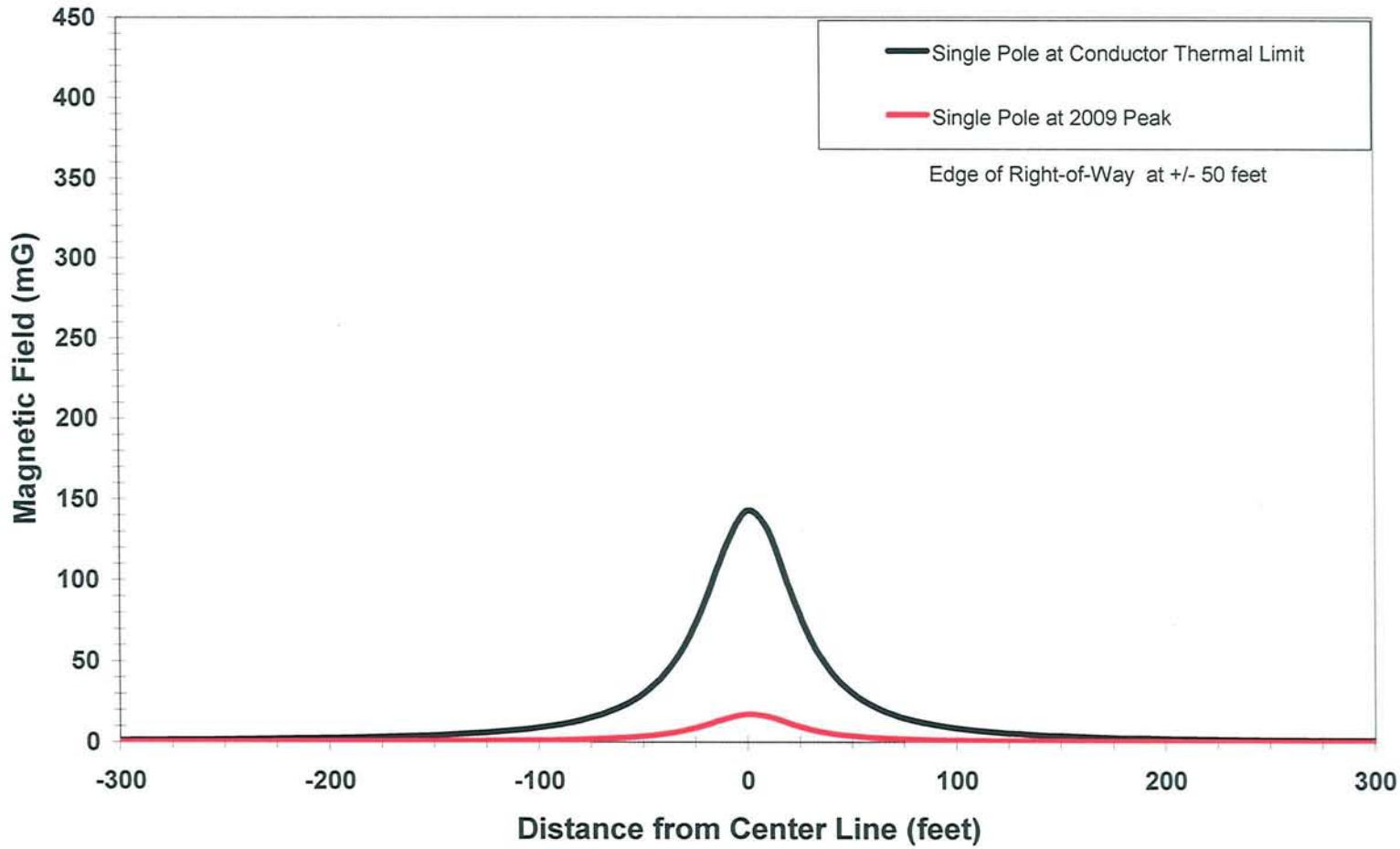

230kV Transmission H-Frame Structure

- SEGMENT 2: Pine River to Badoura (Shared ROW with MP 230kV Line #91)-

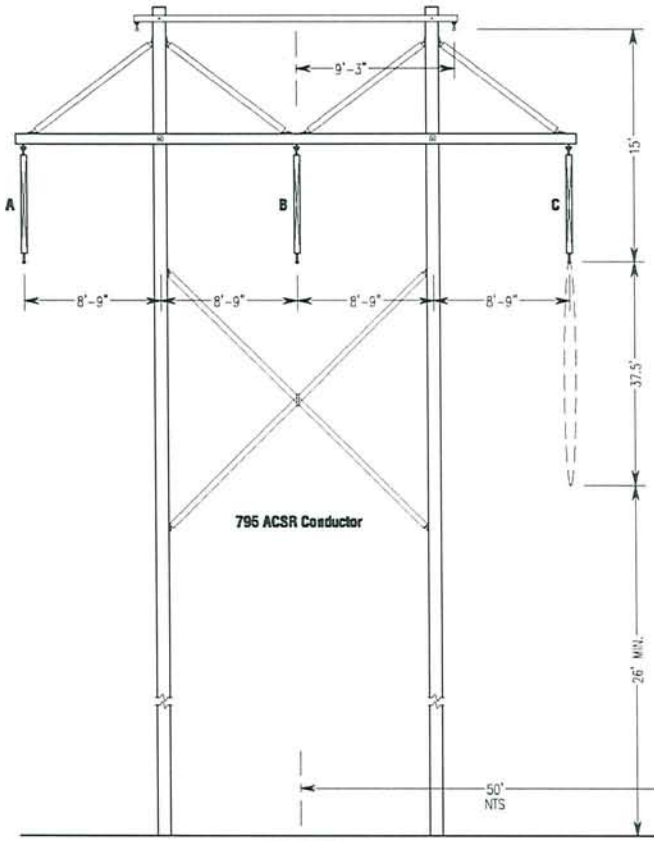

115kV Transmission H-Frame Structure

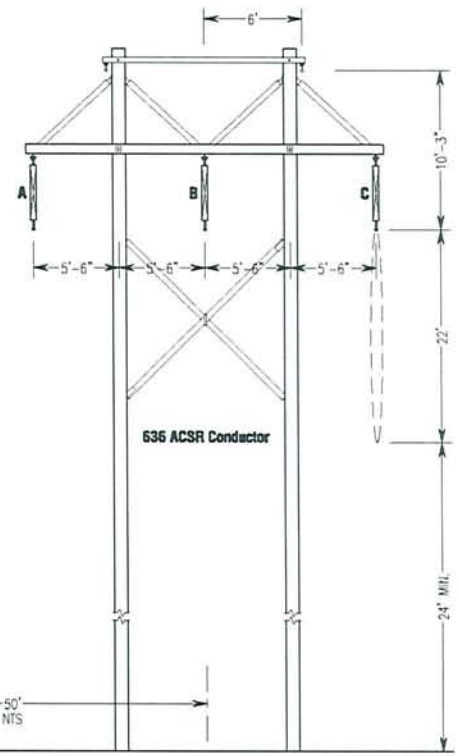

- 230kV LINE -

At Conductor Thermal Limit		At Normal Peak Load	
– Phase A –		– Phase A –	
Voltage (kV)	Volt. Ph. Angle	Voltage (kV)	Volt. Ph. Angle
230	0°	230	0°
Current (amps)	Current Angle	Current (amps)	Current Angle
821	350°	412	350°

- 115kV LINE -

At Conductor Thermal Limit		At Normal Peak Load	
– Phase A –		– Phase A –	
Voltage (kV)	Volt. Ph. Angle	Voltage (kV)	Volt. Ph. Angle
115	0°	115	0°
Current (amps)	Current Angle	Current (amps)	Current Angle
914	320°	110	320°

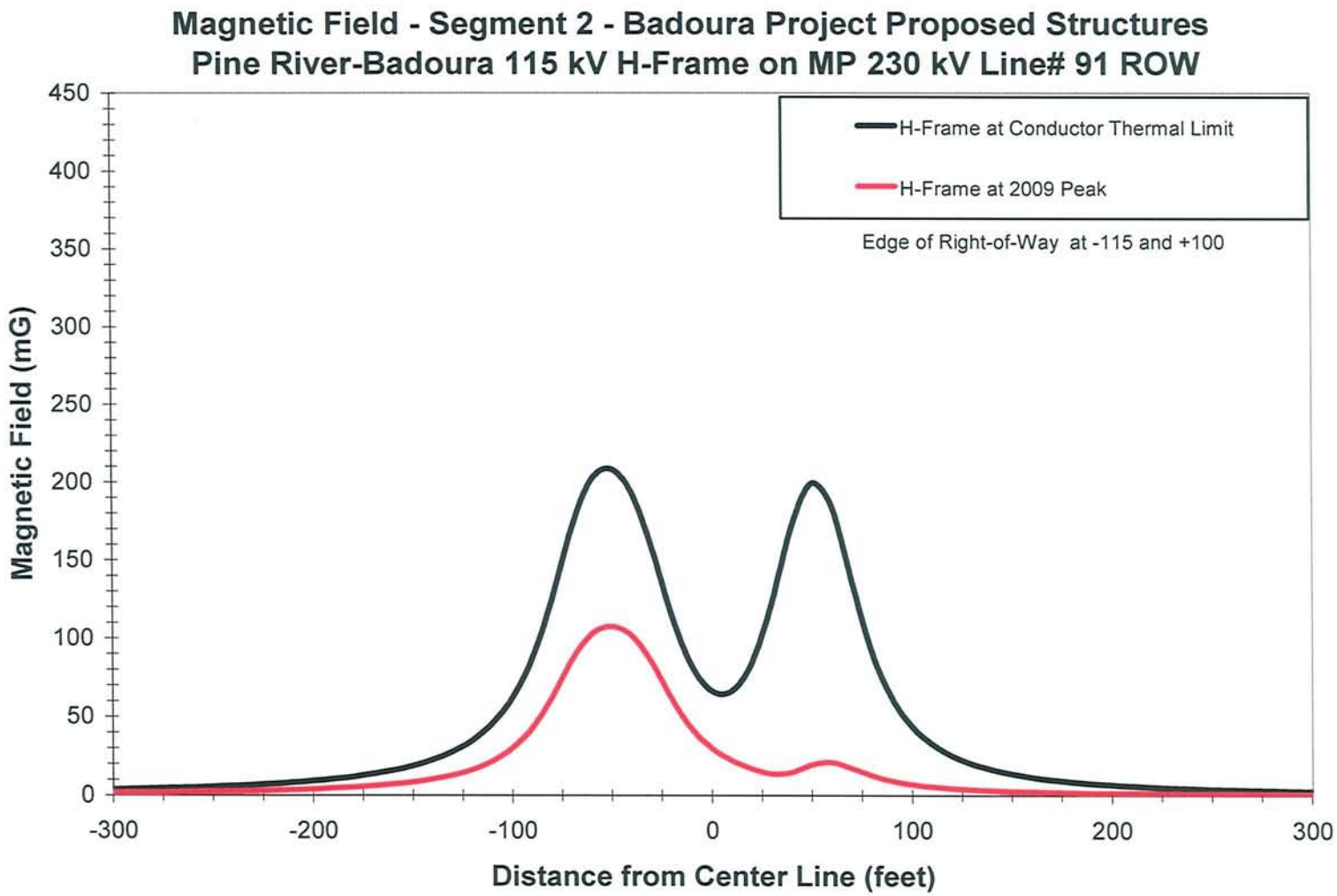
Magnetic Field - Segment 2 - Badoura Project Proposed Structures
Pine River-Badoura 115 kV H-Frame on MP 230 kV Line# 91 ROW
H-Frame at Conductor Thermal Limit
H-Frame at 2009 Peak
Edge of Right-of-Way at -115 and +100
Magnetic Field (mG)
450
400
350
300
250
200
150
100
50
0
-300
-200
-100
0
100
200
300
Distance from Center Line (feet)

SEGMENT 3: Badoura to Highway 371 - G.R.E. 115kV H-Frame Structure

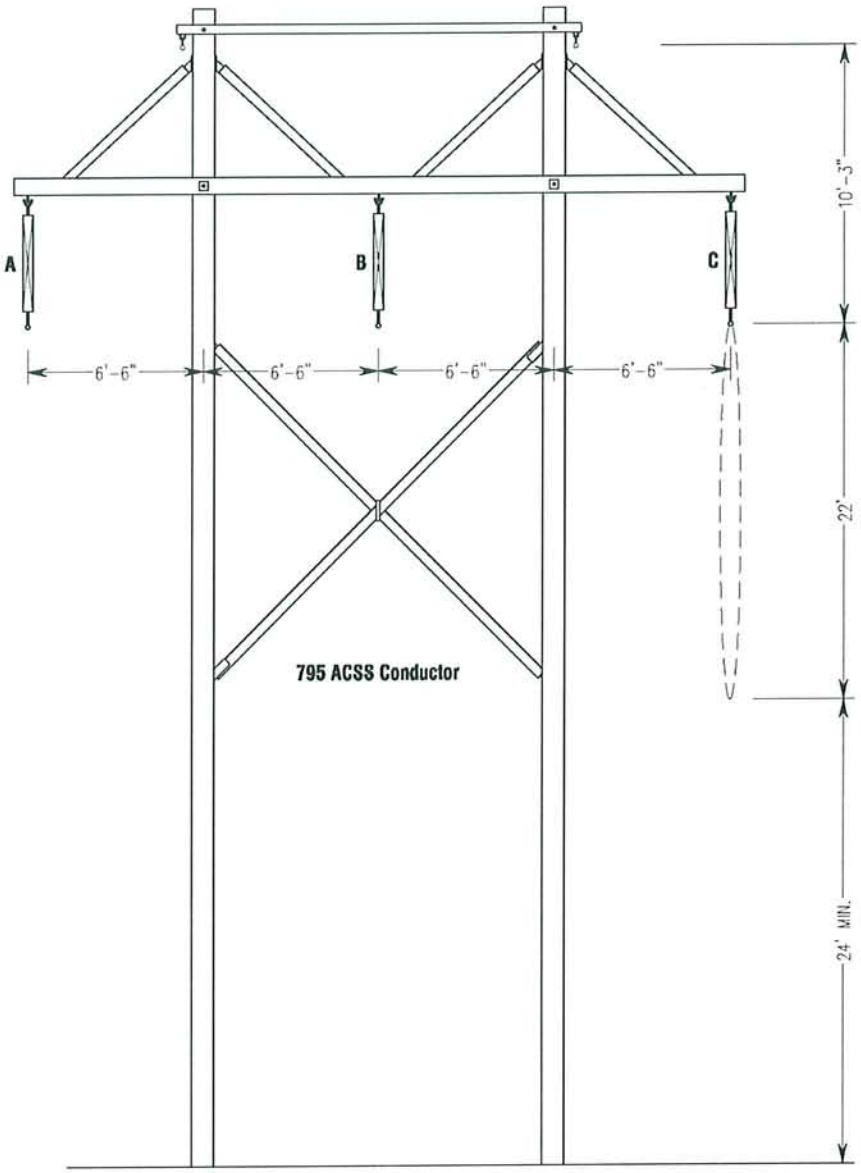

At Conductor Thermal Limit		At Normal Peak Load	
- Phase A -		- Phase A -	
Voltage (kV)	Voltage Phase Angle	Voltage (kV)	Voltage Phase Angle
115	0°	115	0°
Current (amps)	Current Angle	Current (amps)	Current Angle
1586	0°	94	0°

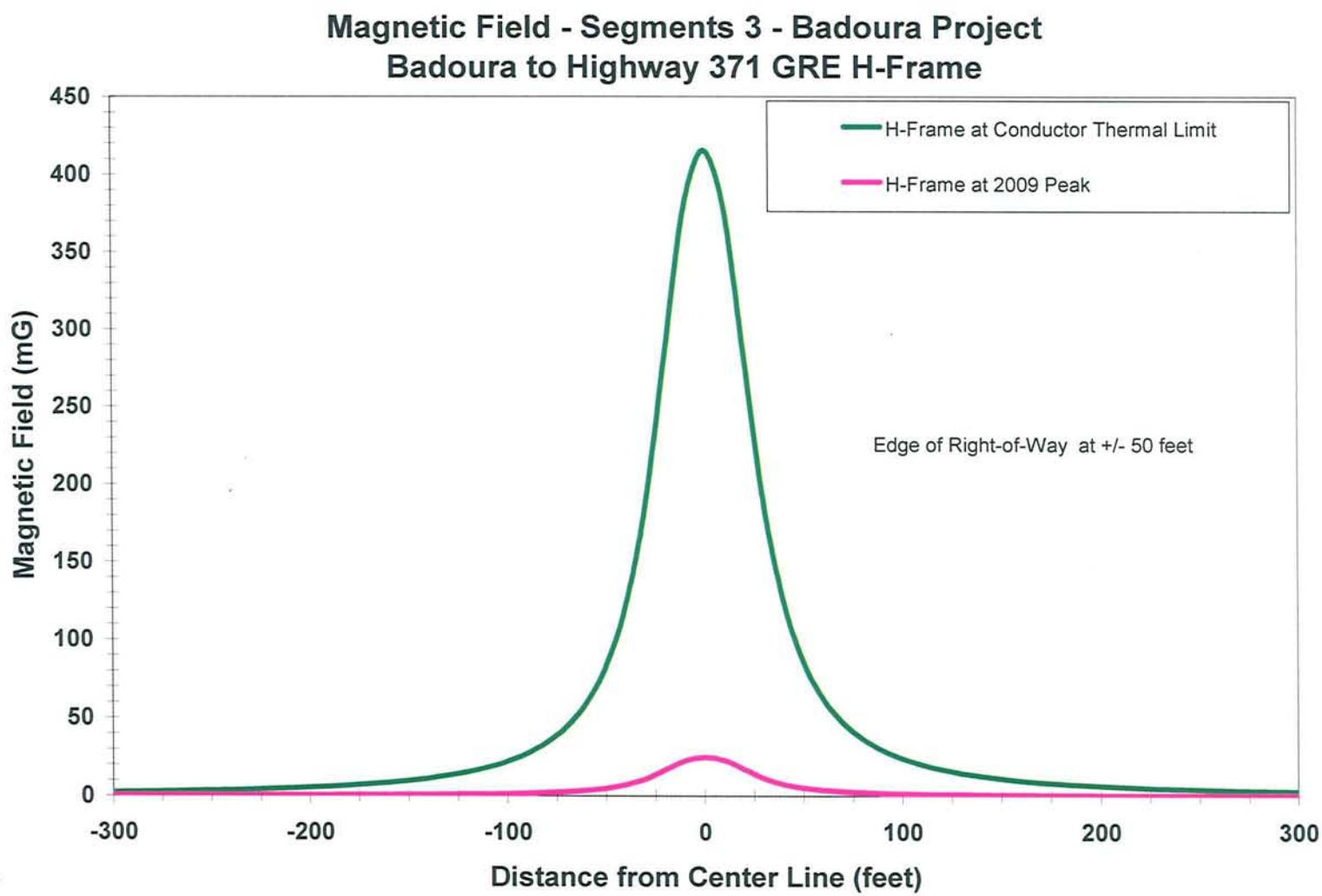
Magnetic Field - Segments 3 - Badoura Project
Badoura to Highway 371 GRE H-Frame
H-Frame at Conductor Thermal Limit
H-Frame at 2009 Peak
Edge of Right-of-Way at +/- 50 feet
Magnetic Field (mG)
450
400
350
300
250
200
150
100
50
0
-300
-200
-100
0
100
200
300
Distance from Center Line (feet)

SEGMENTS 3 & 4: Highway 371 to Birch Lake 115kV THP Single Pole Structure

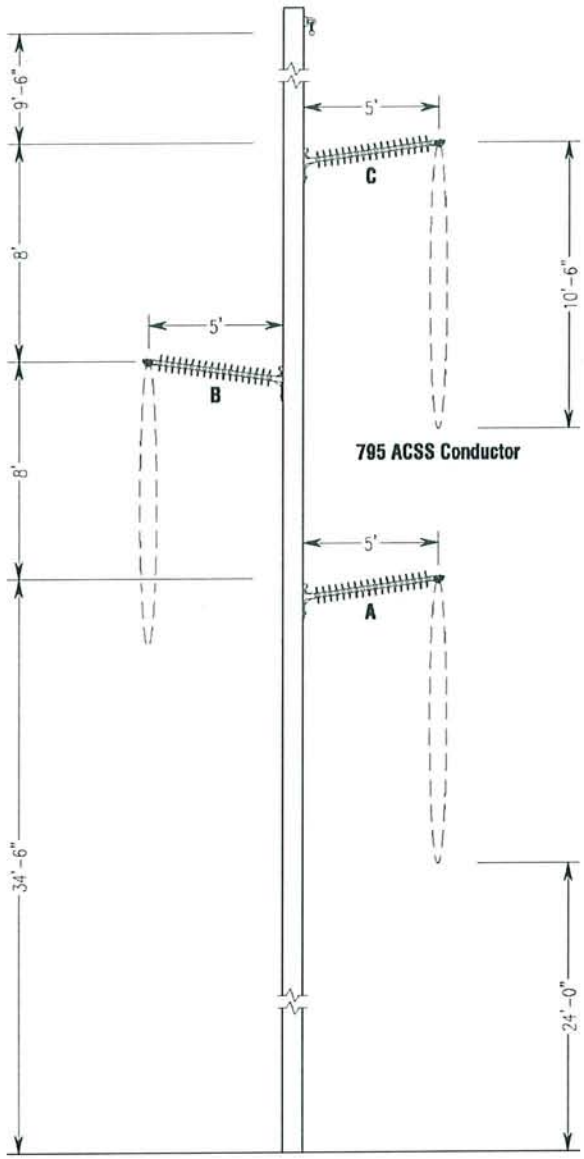

- 115kV -

At Conductor Thermal Limit		At Normal Peak Load	
- Phase A -		- Phase A -	
Voltage (kV)	Voltage Phase Angle	Voltage (kV)	Voltage Phase Angle
115	0°	115	0°
Current (amps)	Current Angle	Current (amps)	Current Angle
1586	0°	94	0°

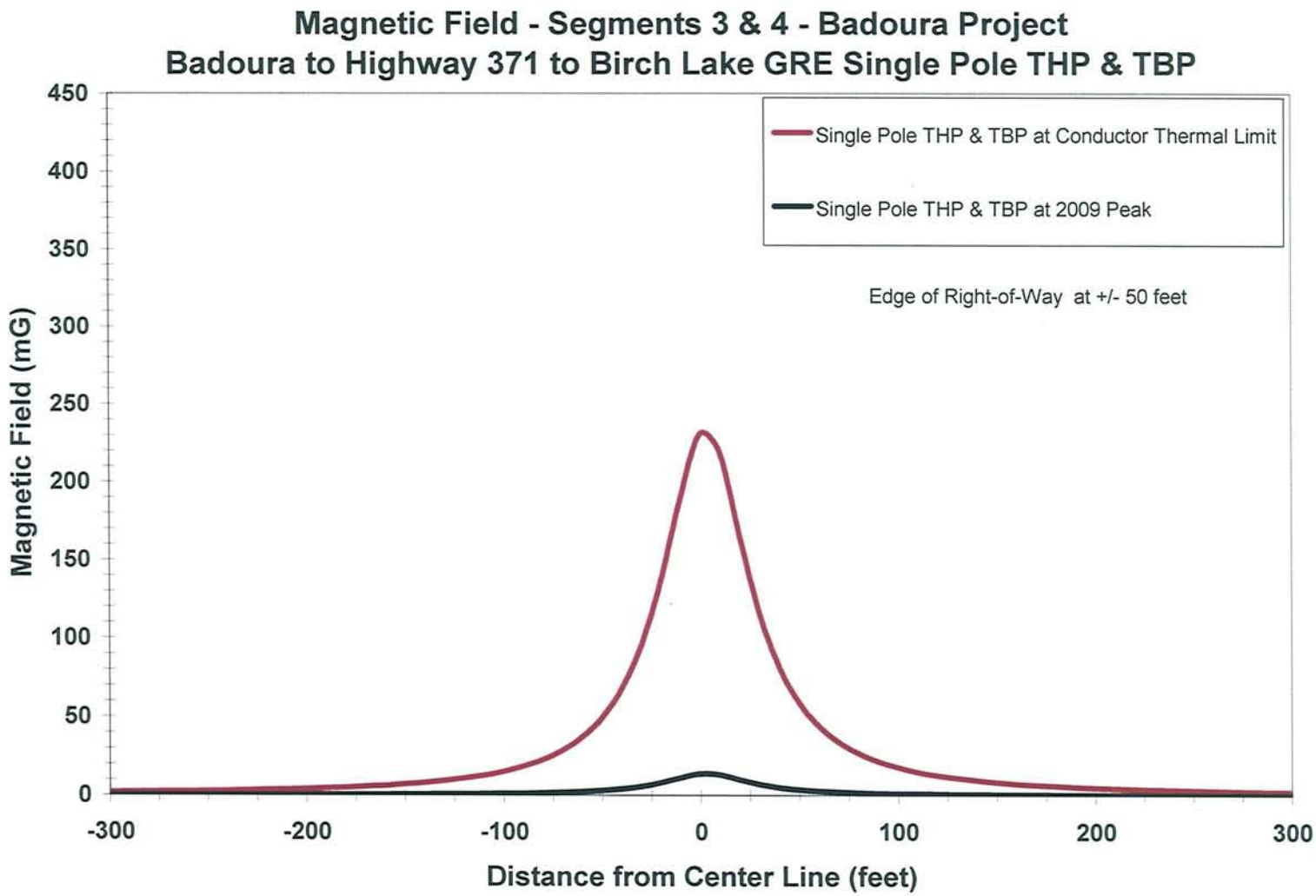
Magnetic Field - Segments 3 & 4 - Badoura Project
Badoura to Highway 371 to Birch Lake GRE Single Pole THP & TBP
Single Pole THP & TBP at Conductor Thermal Limit
Single Pole THP & TBP at 2009 Peak
Edge of Right-of-Way at +/- 50 feet
Magnetic Field (mG)
450
400
350
300
250
200
150
100
50
0
-300
-200
-100
0
100
200
300
Distance from Center Line (feet)

SEGMENT 4: Highway 371 to Birch Lake - 115kV Transmission SPT/34.5kV Underbuild

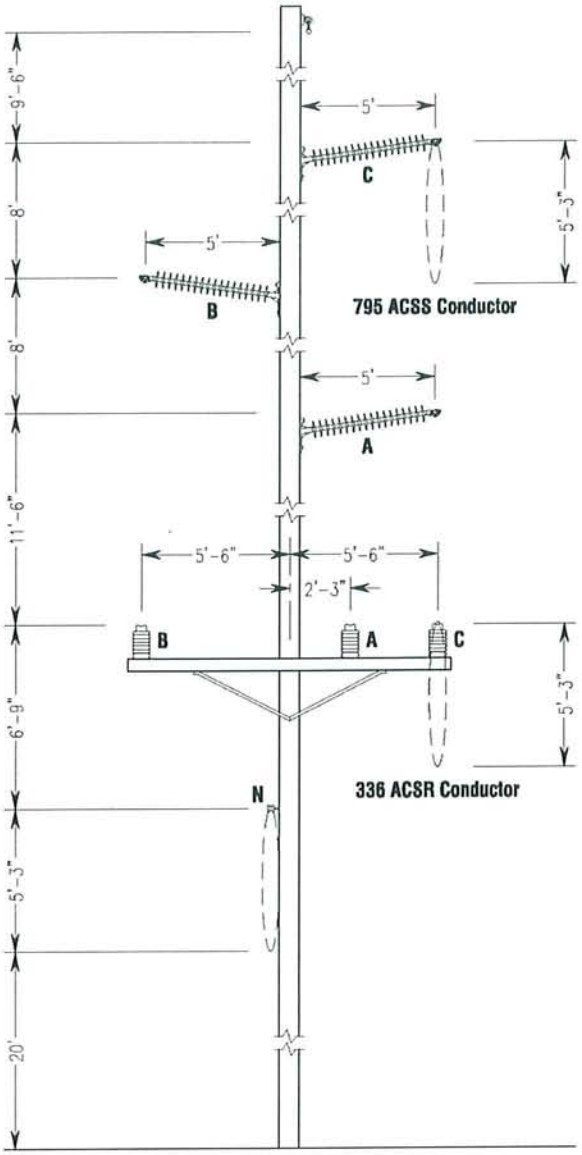

- 115kV LINE -				- 34.5kV UNDERBUILD -			
At Conductor Thermal Limit		At Normal Peak Load		At Conductor Thermal Limit		At Normal Peak Load	
- Phase A -		- Phase A -		- Phase A -		- Phase A -	
Voltage (kV)	Volt. Ph. Angle	Voltage (kV)	Volt. Ph. Angle	Voltage (kV)	Volt. Ph. Angle	Voltage (kV)	Volt. Ph. Angle
115	0°	115	0°	34.5	330°	34.5	330°
Current (amps)	Current Angle	Current (amps)	Current Angle	Current (amps)	Current Angle	Current (amps)	Current Angle
1586	184°	94	184°	572	300°	83	300°

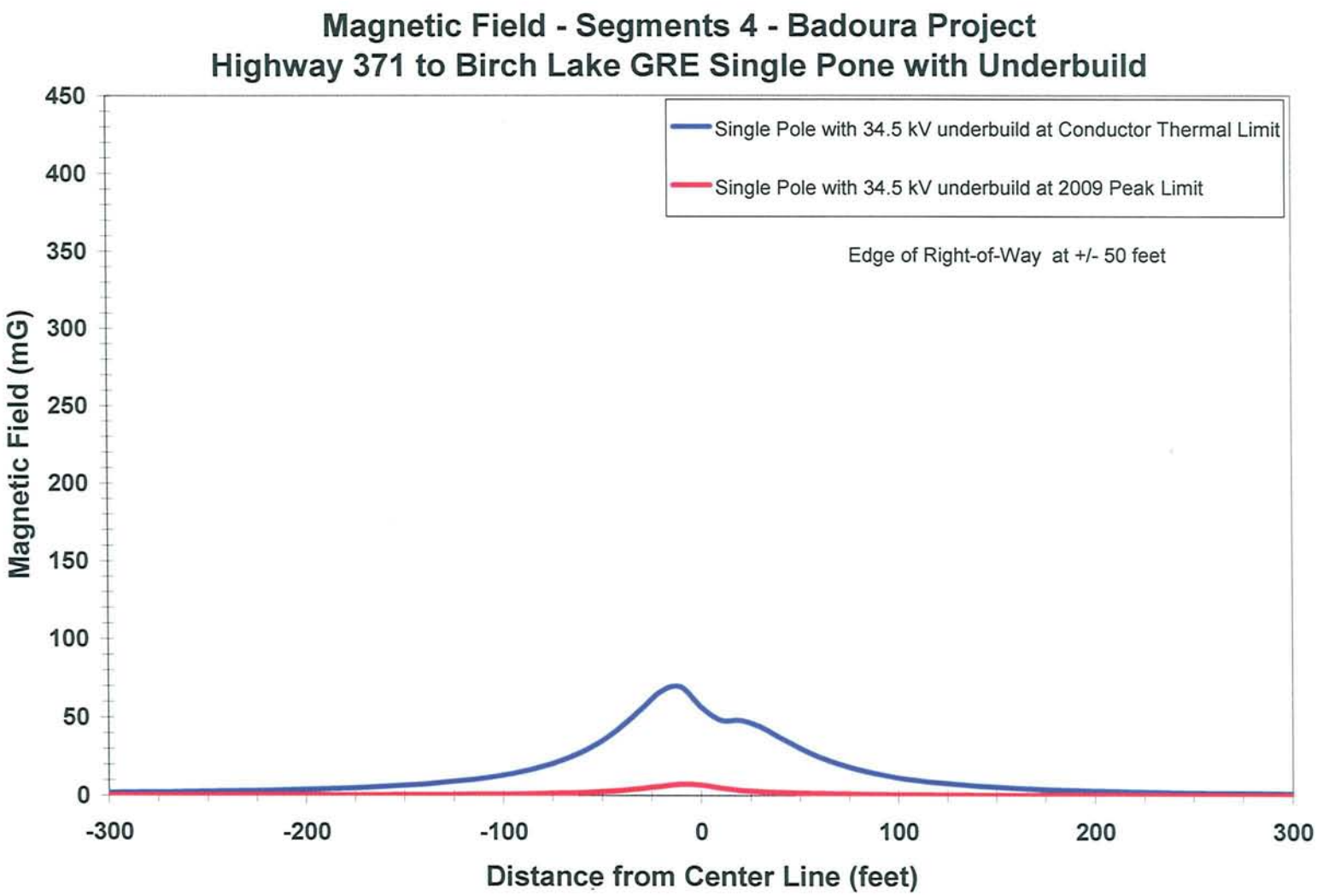
Magnetic Field - Segments 4 - Badoura Project
Highway 371 to Birch Lake GRE Single Pone with Underbuild
Single Pole with 34.5 kV underbuild at Conductor Thermal Limit
Single Pole with 34.5 kV underbuild at 2009 Peak Limit
Edge of Right-of-Way at +/- 50 feet
Magnetic Field (mG)
450
400
350
300
250
200
150
100
50
0
-300
-200
-100
0
100
200
300
Distance from Center Line (feet)

SEGMENT 5: Badoura to Long Lake 115kV THP Single Pole Structure

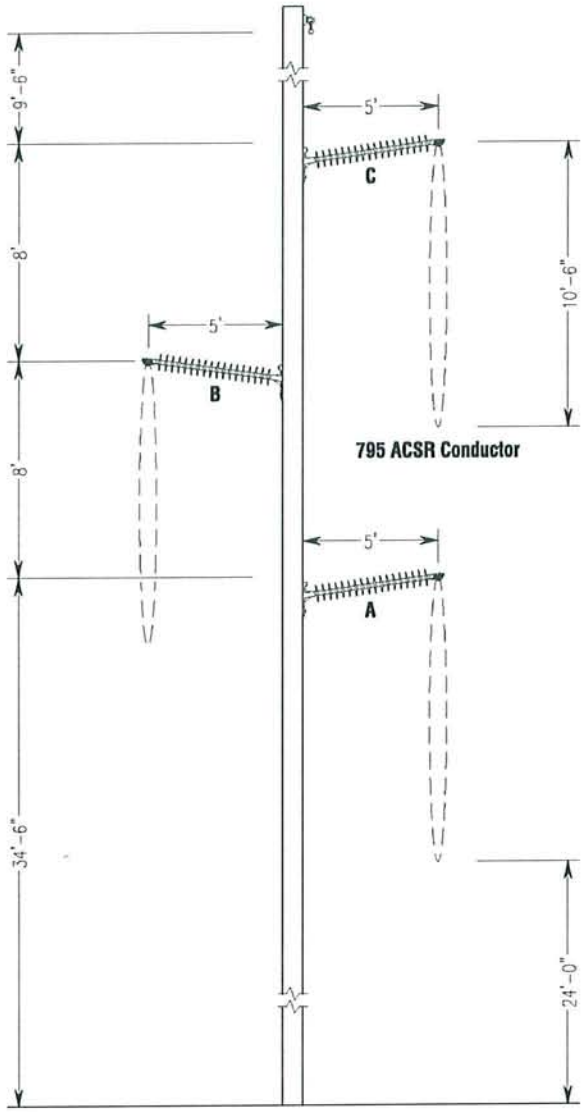

- 115kV -

At Conductor Thermal Limit		At Normal Peak Load	
- Phase A -		- Phase A -	
Voltage (kV)	Voltage Phase Angle	Voltage (kV)	Voltage Phase Angle
115	0°	115	0°
Current (amps)	Current Angle	Current (amps)	Current Angle
982	0°	82	0°

SEGMENT 5: Badoura to Long Lake - 115kV TBP Single Pole Structure

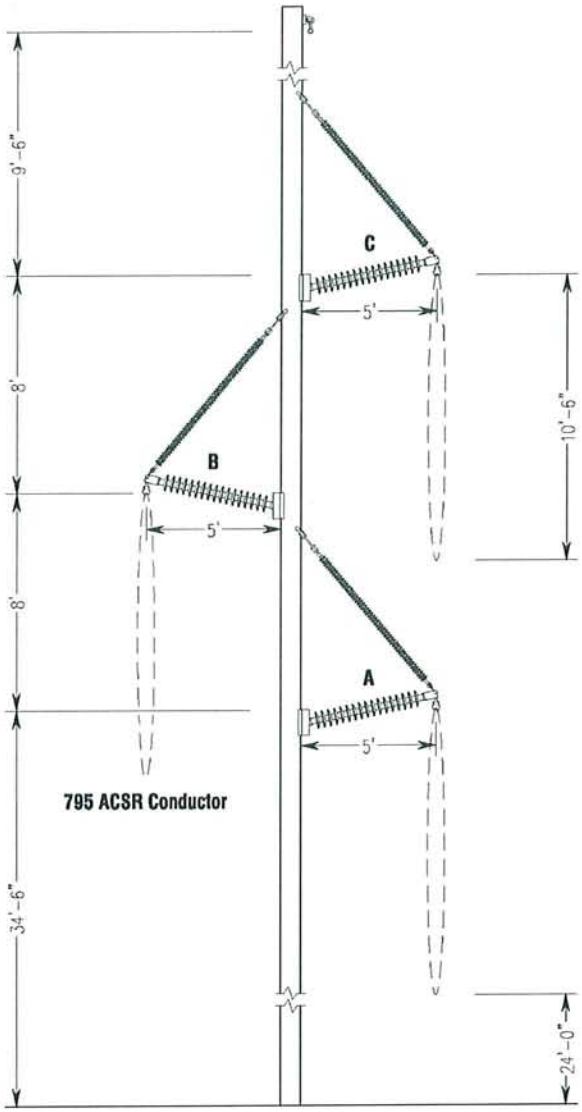

- 115kV -

At Conductor Thermal Limit		At Normal Peak Load	
– Phase A –		– Phase A –	
Voltage (kV)	Voltage Phase Angle	Voltage (kV)	Voltage Phase Angle
115	0°	115	0°
Current (amps)	Current Angle	Current (amps)	Current Angle
982	0°	82	0°

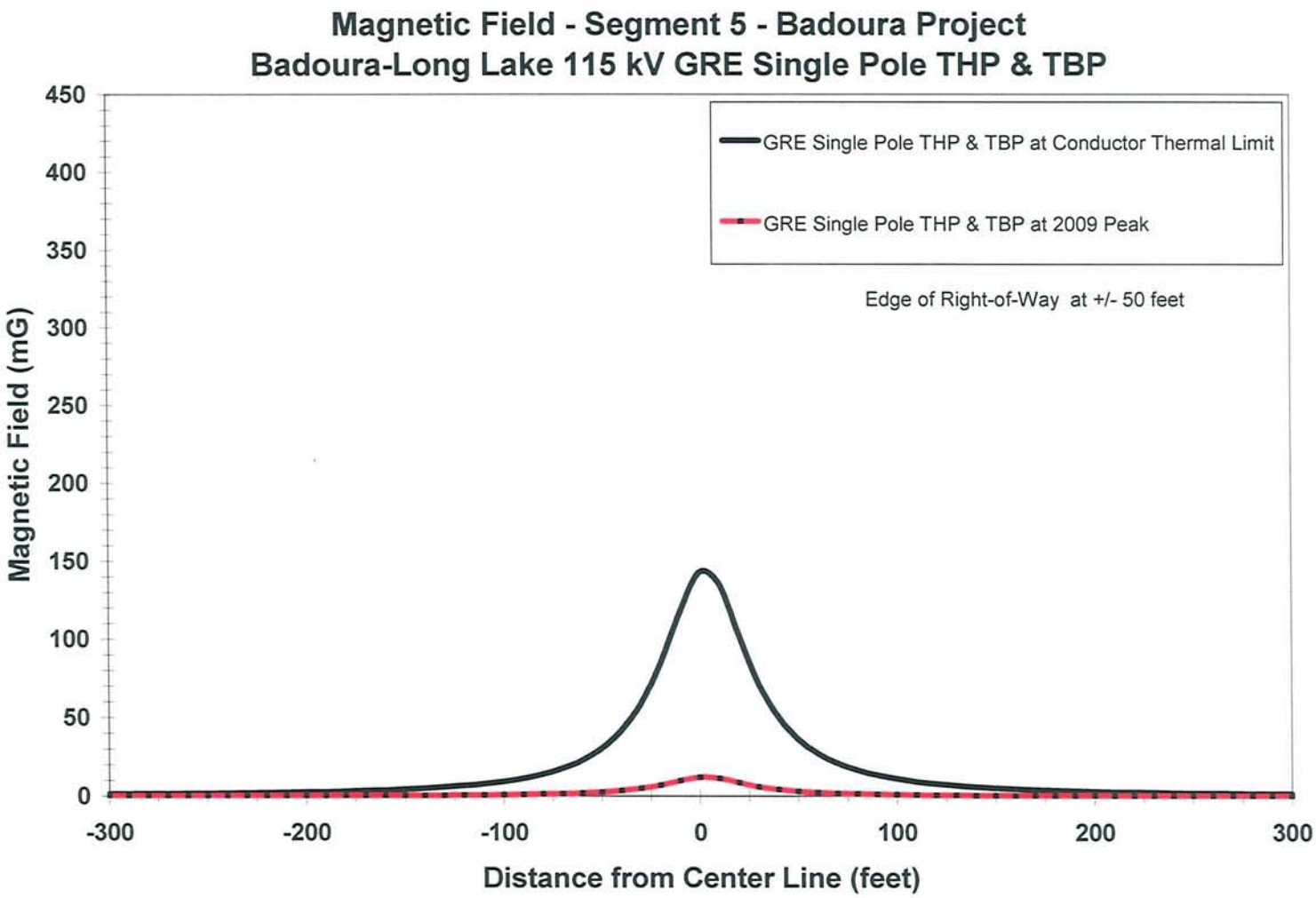
Magnetic Field - Segment 5 - Badoura Project
Badoura-Long Lake 115 kV GRE Single Pole THP & TBP
GRE Single Pole THP & TBP at Conductor Thermal Limit
GRE Single Pole THP & TBP at 2009 Peak
Edge of Right-of-Way at +/- 50 feet
Magnetic Field (mG)
450
400
350
300
250
200
150
100
50
0
-300
-200
-100
0
100
200
300
Distance from Center Line (feet)

SEGMENT 5: Badoura to Long Lake - 115kV SPT/34.5kV Underbuild

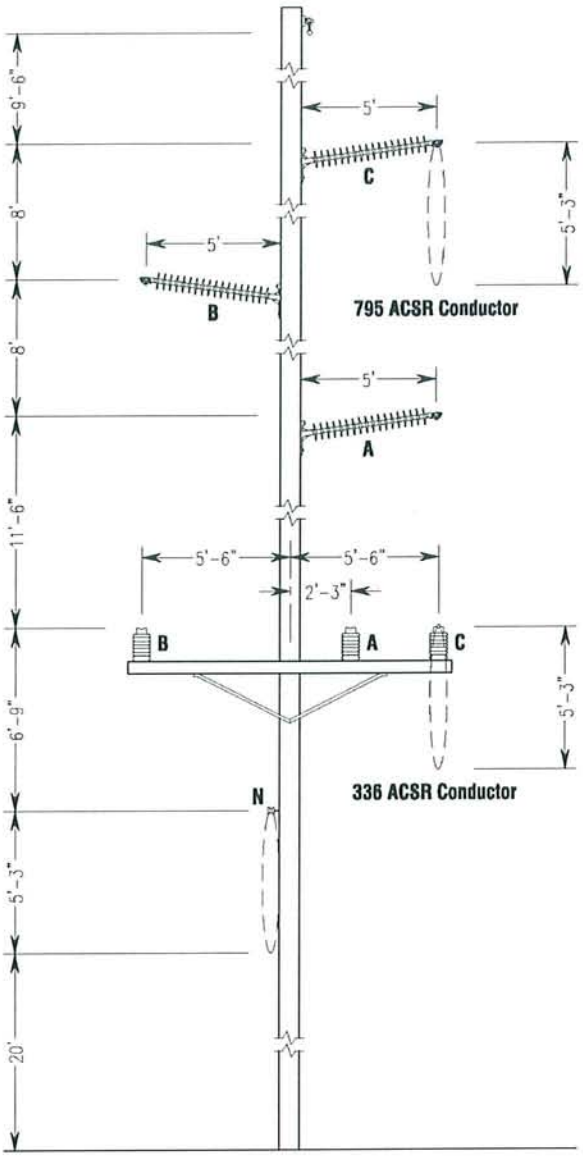

- 115kV LINE -				- 34.5kV UNDERBUILD -			
At Conductor Thermal Limit		At Normal Peak Load		At Conductor Thermal Limit		At Normal Peak Load	
- Phase A -		- Phase A -		- Phase A -		- Phase A -	
Voltage (kV)	Volt. Ph. Angle	Voltage (kV)	Volt. Ph. Angle	Voltage (kV)	Volt. Ph. Angle	Voltage (kV)	Volt. Ph. Angle
115	0°	115	0°	34.5	330°	34.5	330°
Current (amps)	Current Angle	Current (amps)	Current Angle	Current (amps)	Current Angle	Current (amps)	Current Angle
982	215°	82	215°	572	12°	141	12°

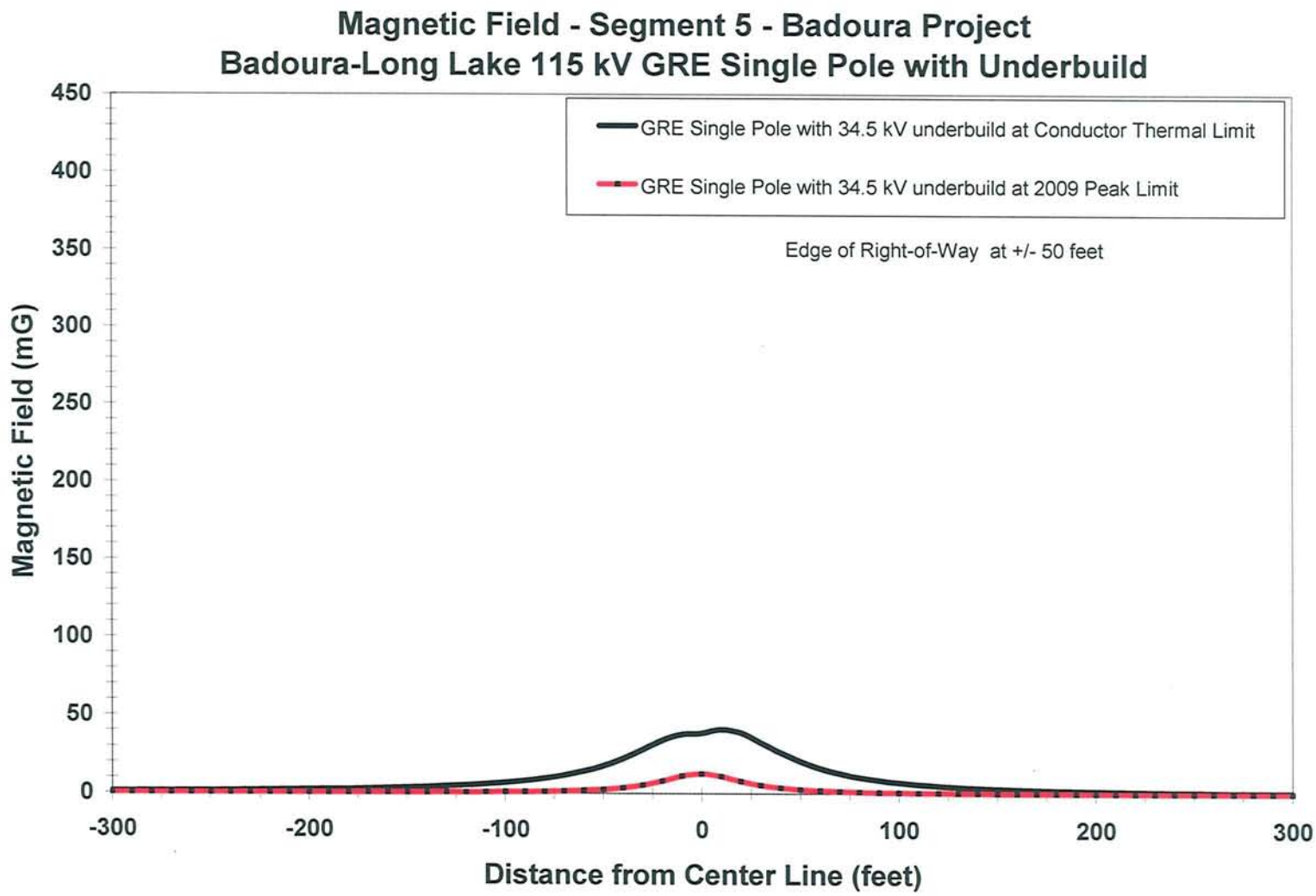
Magnetic Field - Segment 5 - Badoura Project
Badoura-Long Lake 115 kV GRE Single Pole with Underbuild
GRE Single Pole with 34.5 kV underbuild at Conductor Thermal Limit
GRE Single Pole with 34.5 kV underbuild at 2009 Peak Limit
Edge of Right-of-Way at +/- 50 feet
Magnetic Field (mG)
450
400
350
300
250
200
150
100
50
0
-300
-200
-100
0
100
200
300
Distance from Center Line (feet)