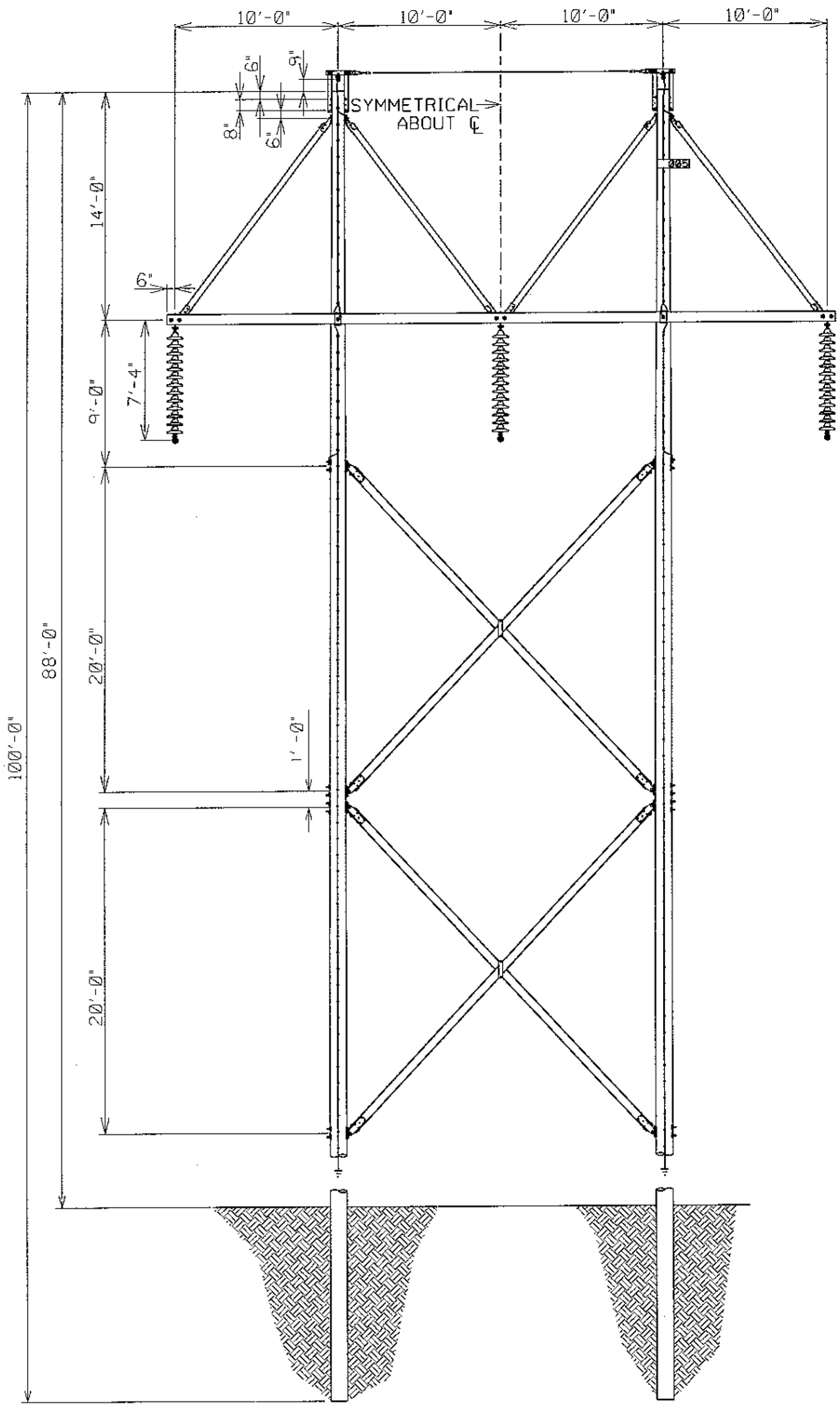

HDR

HDR Engineering, Inc.

Appendix E.1

230KV 'H' FRAME STANDARD
TANGENT TO 2° ANGLE

K:\otter trail\h frame.dgn 04/08/2005 09:04:14 AM

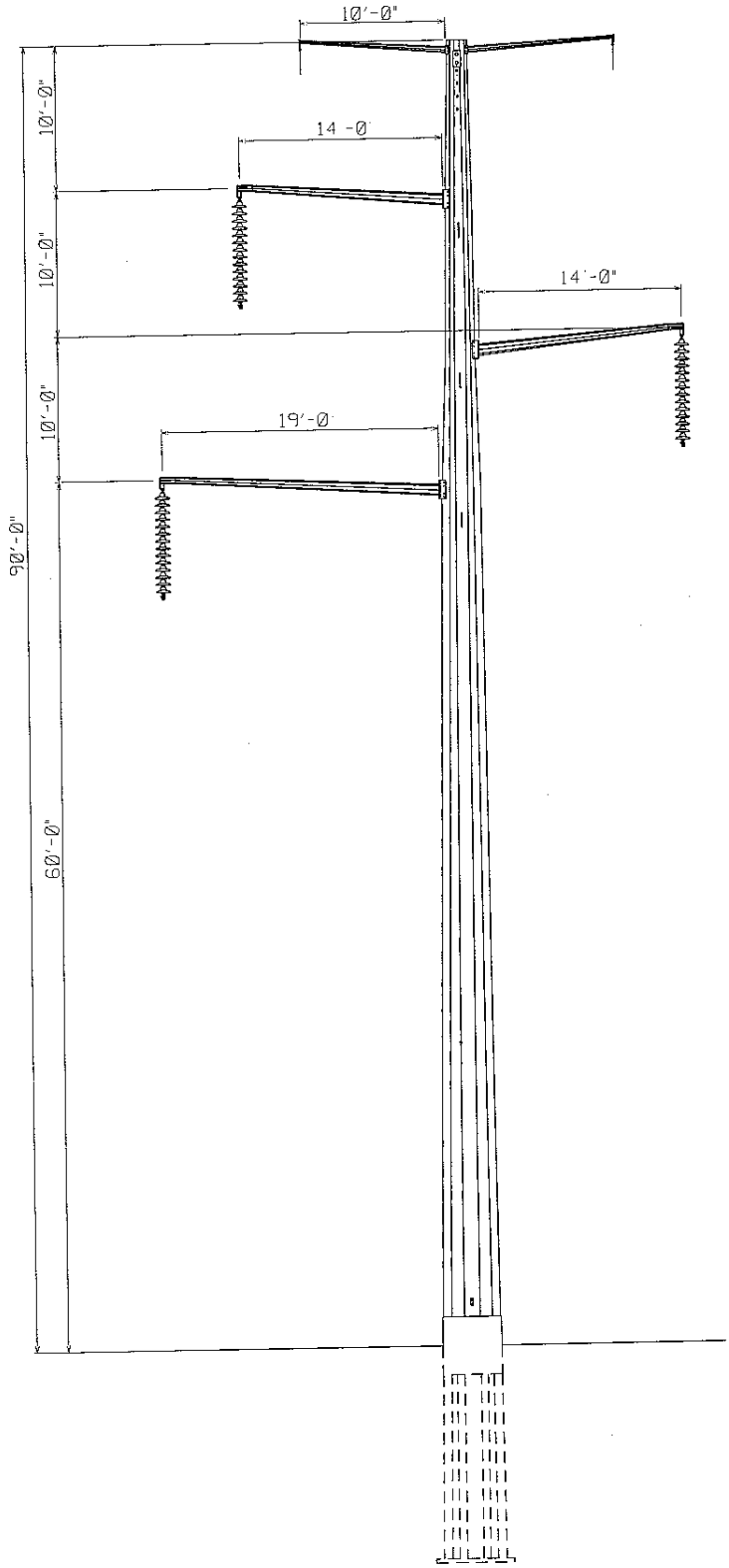

LOOKING WEST

HDR

HDR Engineering, Inc.

Appendix E.2

TYPICAL POLE
230KV DAVIT ARM
TANGENT

K:\Otc\22595\davit arm.dgn 6/1/2005 7:45:30 AM

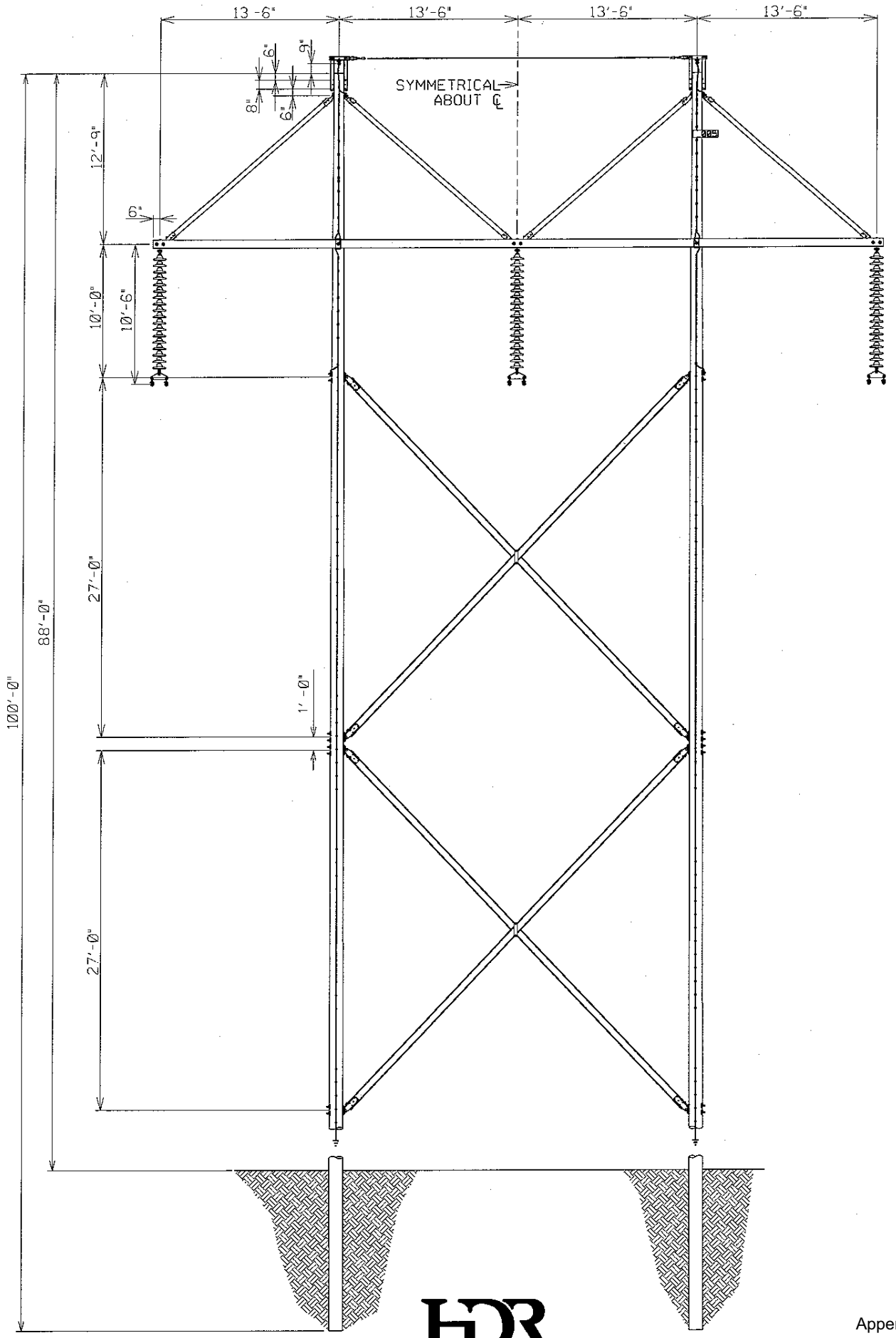

HDR

HDR Engineering, Inc.

Appendix E.3

TYPICAL STRUCTURE
345KV "H" FRAME STANDARD
TANGENT STRUCTURE

...\22595\BUNDLED 345 h frame.dgn 9/6/2005 2:29:35 PM

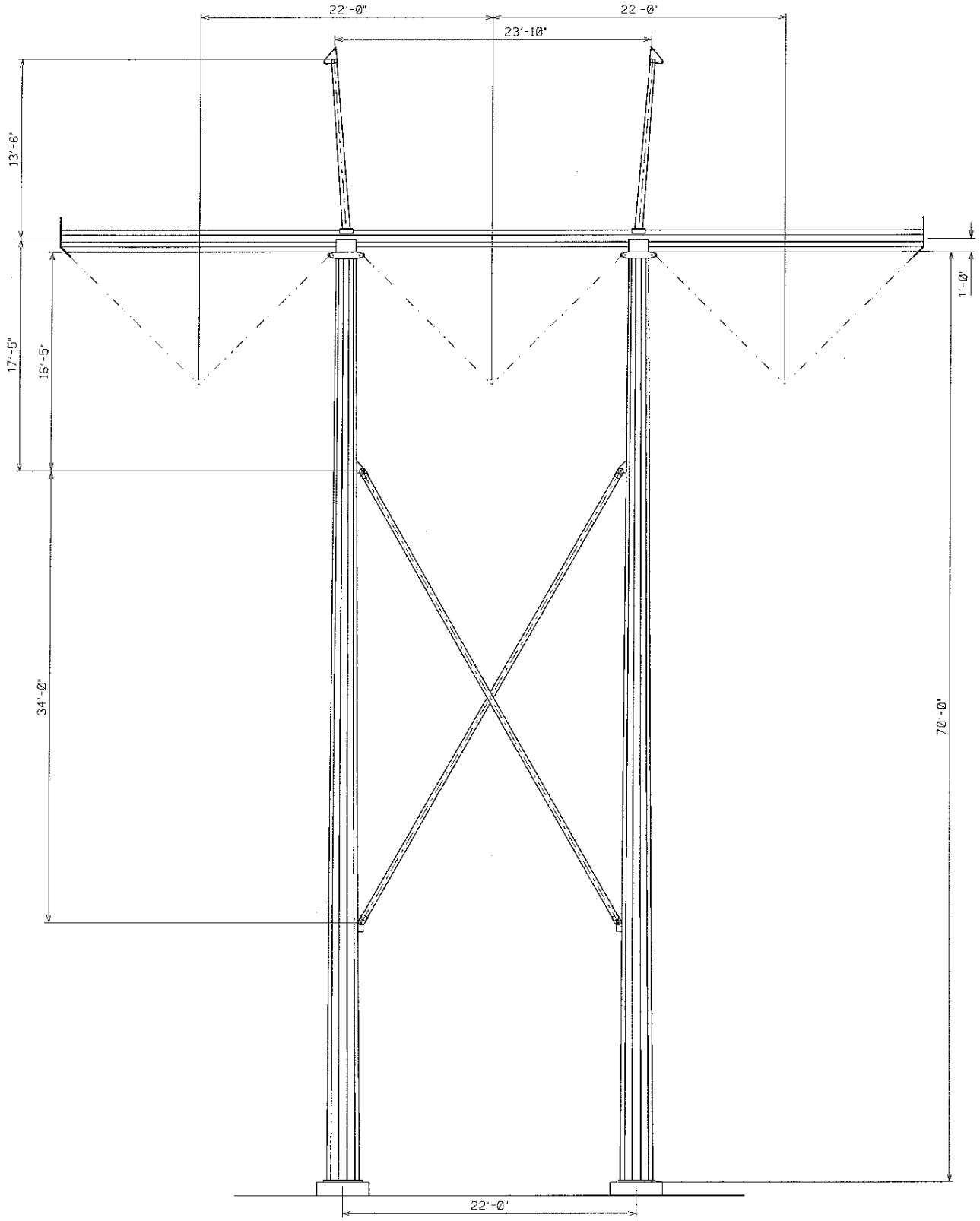

HDR

HDR Engineering, Inc

Appendix E.4

TYPICAL STRUCTURE
SINGLE CIRCUIT 345KV
TANGENT

K:\Otc\22595\h frame 345kv.dgn 6/13/2005 7:23:12 AM

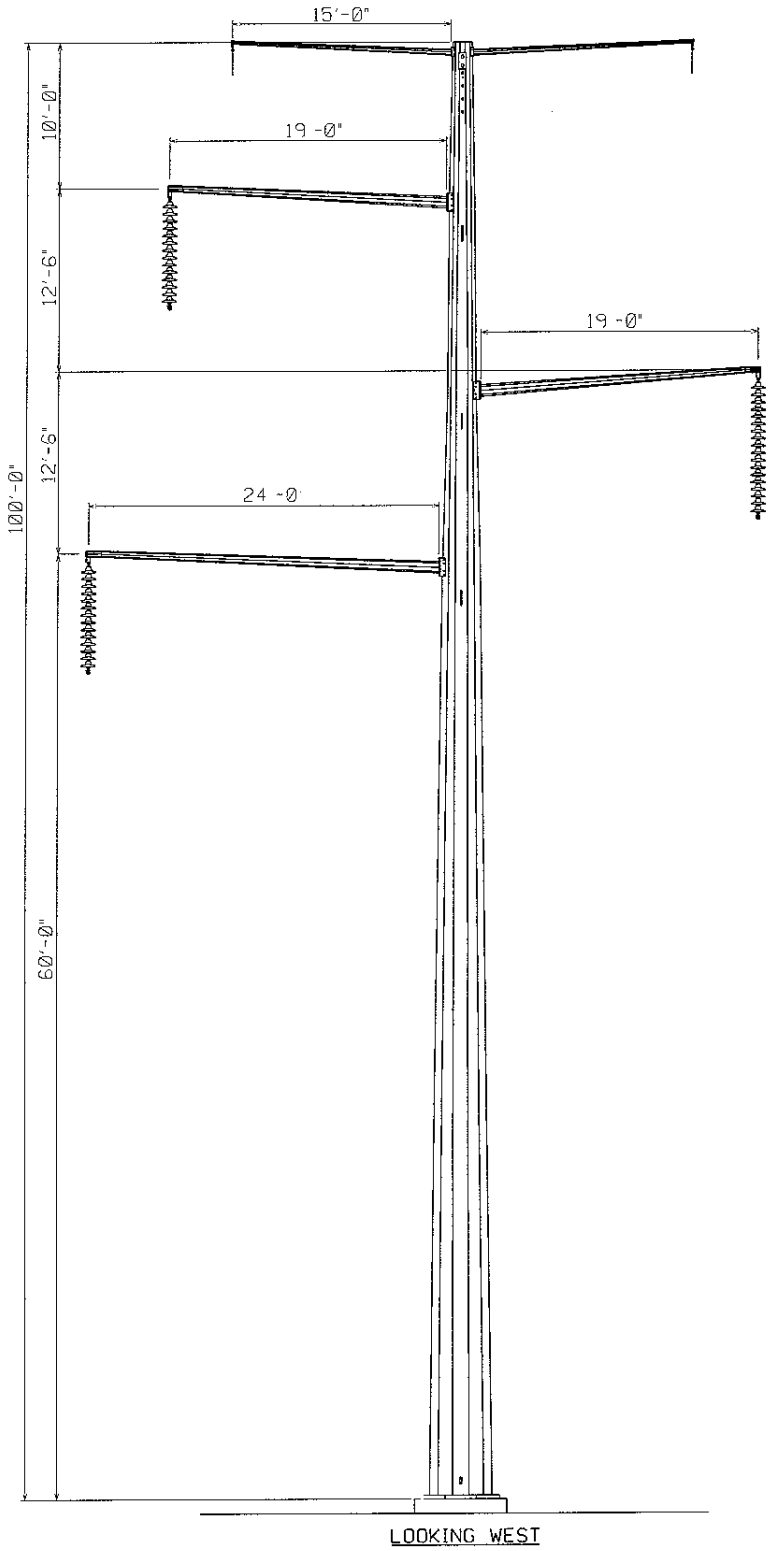

HDR

HDR Engineering, Inc.

Appendix E.5

TYPICAL POLE
SINGLE CIRCUIT 345KV
TANGENT

K:\Olc\22595\SC 345 KV.dgn 8/1/2005 7:47:40 AM

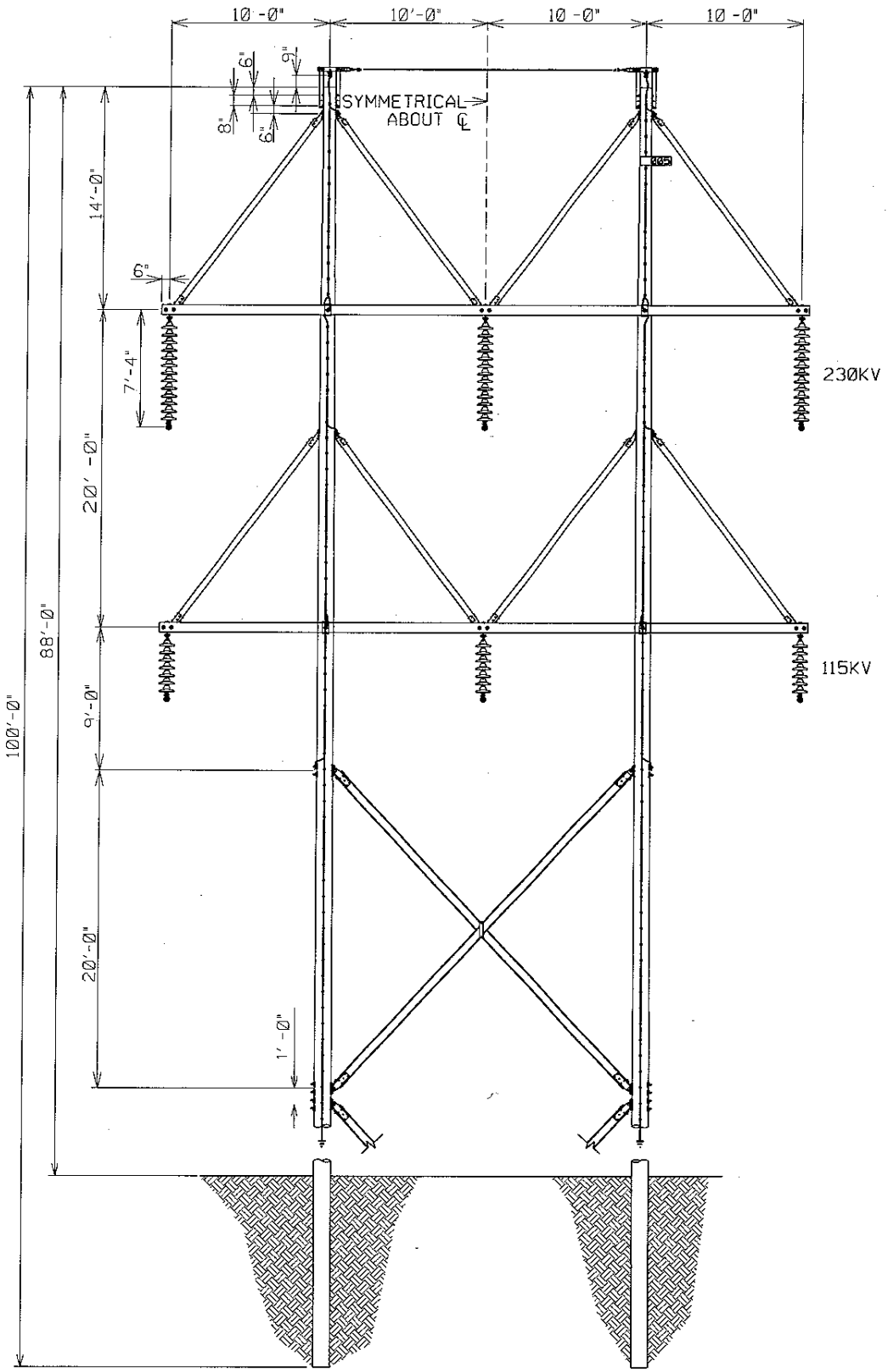

HDR

HDR Engineering, Inc.

Appendix E.6

TYPICAL STRUCTURE
230/115KV WOOD "H" FRAME STANDARD
TANGENT TO 2° ANGLE

11/16/2005 9:06:37 AM jjustice K:\Otc\22595\DC 230-115 h frame.dgn

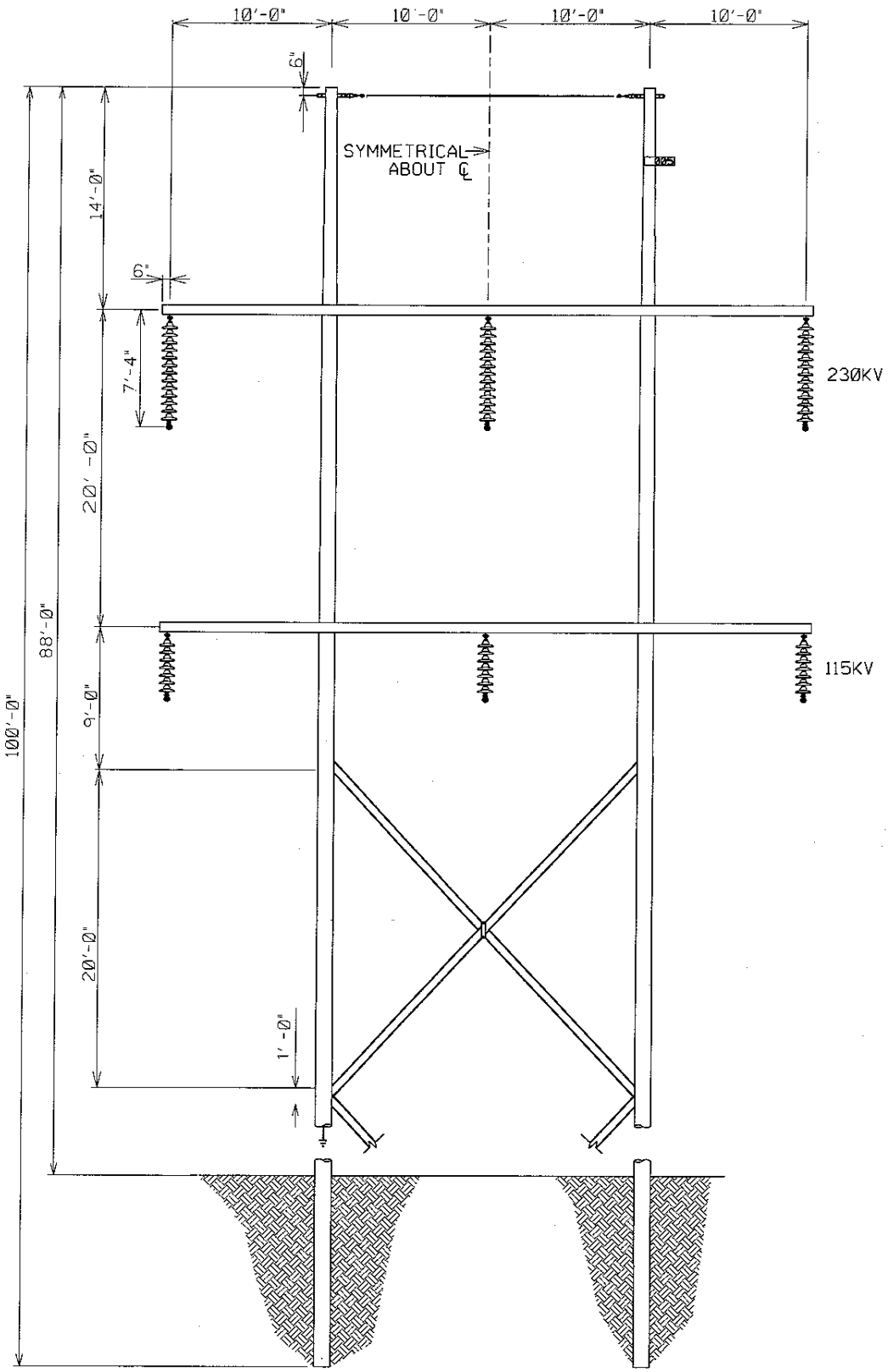

HDR

HDR Engineering, Inc.

Appendix E.7

TYPICAL STRUCTURE
230/115KV STEEL "H" FRAME STANDARD
TANGENT TO 2° ANGLE

11/16/2005 9:06:14 AM jjustice K:\Otc\22595\DC 230-115 h frame steel.dgn

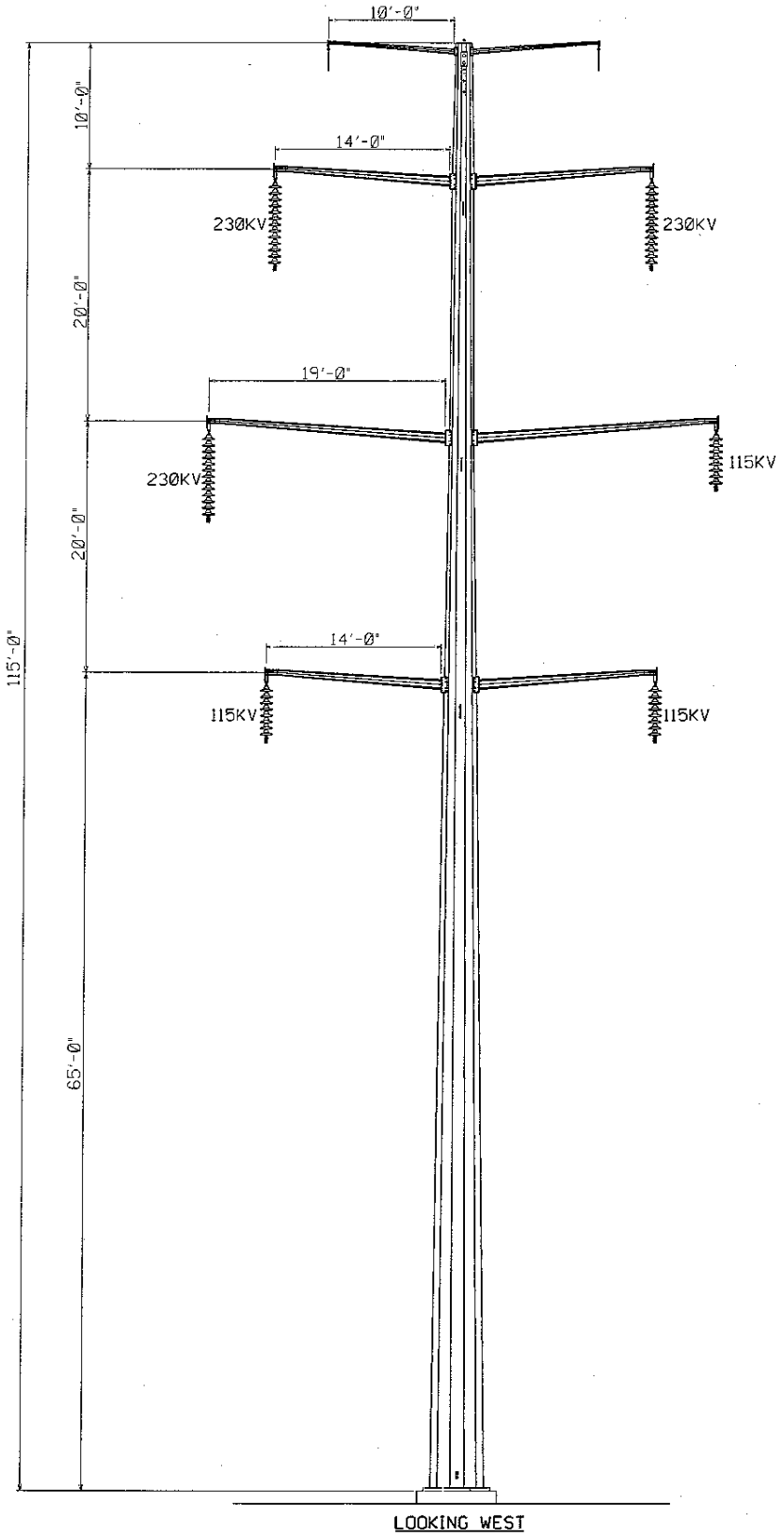

HDR

HDR Engineering, Inc.

Appendix E.8

TYPICAL POLE
DOUBLE CIRCUIT 230/115KV
TANGENT

11/9/2005 11:25:53 AM jjustice K:\Otc\22595\DC 230-115 KV.dgn

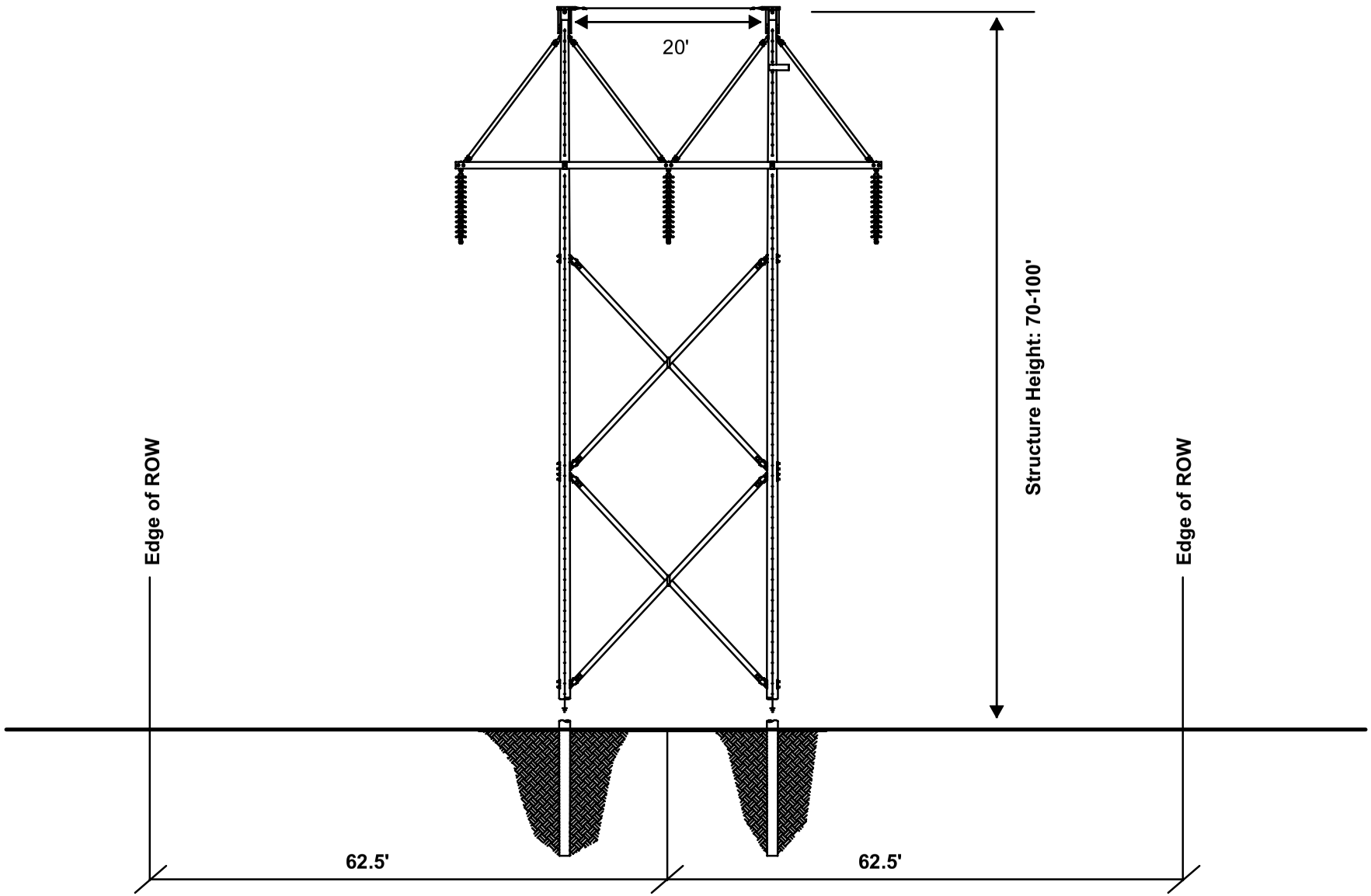

125' Total Right-of-Way

230 kV H-Frame Structure
Right-of-Way Requirements

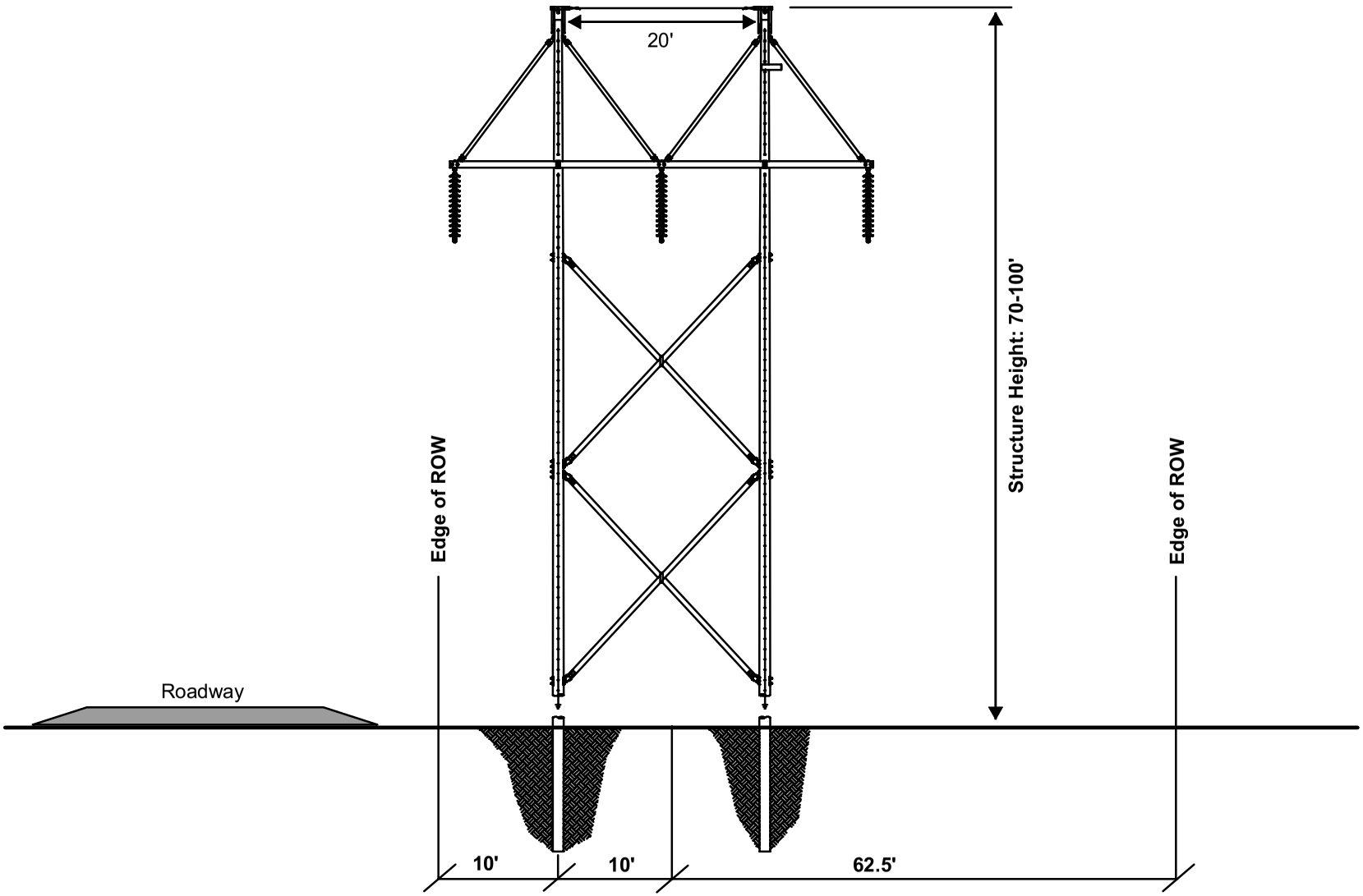

82.5' Total Right-of-Way

230 kV H-Frame Structure
Right-of-Way Requirements
Adjacent to Road

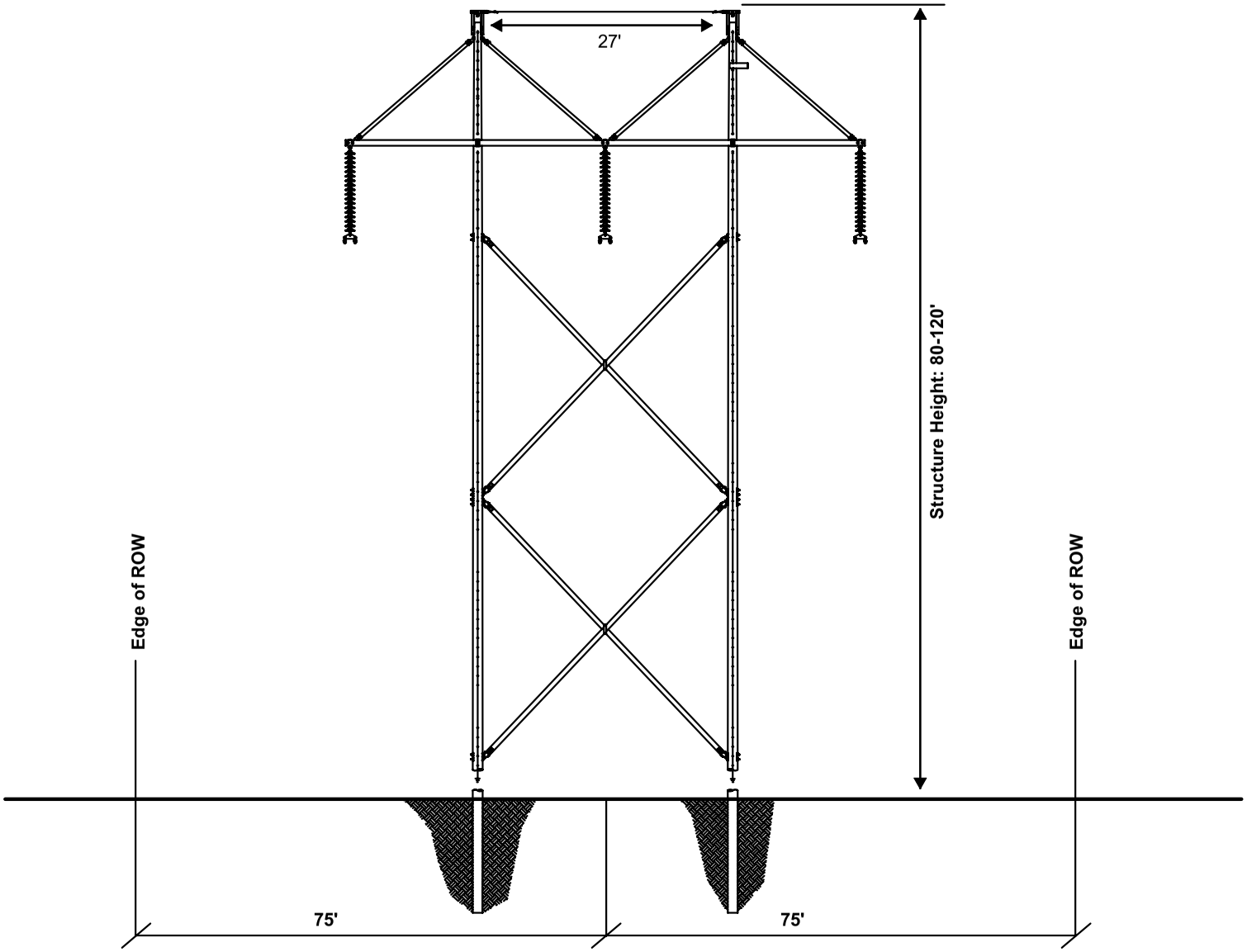

150' Total Right-of-Way

345 kV H-Frame Structure
Right-of-Way Requirements

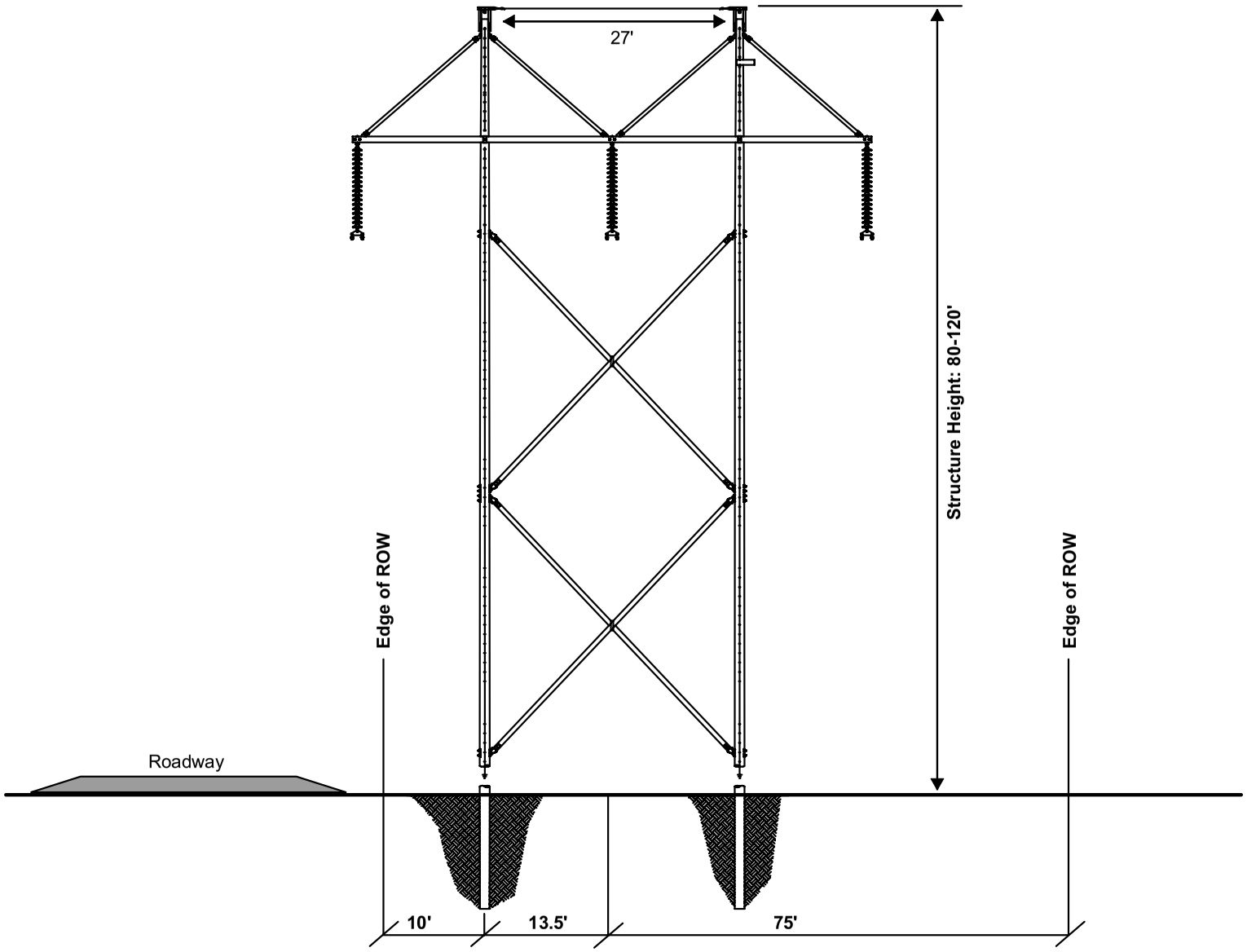

98.5' Total Right-of-Way

345 kV H-Frame Structure
Right-of-Way Requirements
Adjacent to Road