APPENDIX F3
Minnesota Routine Assessment Method 3.1 Functions and Values Assessment Summary

INTENTIONALLY LEFT BLANK

Appendix F3

MnRAM 3.1 Functions and Values Assessment Summary

The Minnesota Routine Assessment Method (MnRAM) 3.1 was completed for each wetland delineated on the West Range Site (preferred) and East Range Site (alternative). The results of the Wetland Community Summary and the Wetland Functional Assessment Summary for the both the West and East Range Sites are attached at the end of this document.

West Range Site (Preferred Site)

Wetland Community Summary

The Wetland Community Summary rates each wetland based upon native plant species diversity, presence of rare plant species, and presence of non-native and invasive species. 82% of the wetlands surveyed had a high rating, 15% had a moderate rating, and 3% had a moderate/high rating. The following paragraphs describe the characteristics of each community based on their rating. Detailed descriptions the rating system can be found in the MnRAM 3.1 Comprehensive Guidance[1] (BWSR, 2007).

Eighty two percent (82%) of the wetlands surveyed had a high rating for Vegetative Diversity/Integrity. The hardwood swamps and alder thickets that rated as high had less than 20% dominance of box elder, cottonwood, quaking aspen, and other non-native species as well as an understory dominated by at least five native species of herbaceous vegetation. The coniferous bogs that rated as high were comprised of stands of tamarack or black spruce with the characteristic assemblage of bog vegetation and were not dominated by more than 20% of non-native vegetation. The wet meadows that rated as high were comprised of 10 or more species of native grasses, sedges, ferns, rushes, and forbs. Invasive species comprised less than 20% of total vegetative coverage. Sedge meadows that rated as high were dominated mostly by sedges with a mixture of other native grasses, ferns, rushes, and forbs. Invasive species comprised less than 20% of the herbaceous layer. Shallow marshes that rated as high included dominance of three or more native aquatic plant species (or less species if vegetative quality was high), less than 40% cover of cattails, and less than 20% cover of purple loosestrife.

Fifteen percent (15%) of the wetlands surveyed had a moderate rating for Vegetative Diversity/Integrity. The hardwood swamps and alder thickets that rated as moderate had 20-50% dominance of non-native species and four or fewer native species of herbaceous vegetation. The coniferous bogs that rated as moderate were comprised of characteristic bog vegetation but had 20-50% cover of non-native species in one strata. The wet meadows that rate as moderate were comprised of five to nine species of native grasses, sedges, rushes, ferns, and forbs. Invasive species comprised between 20-50% of vegetative coverage. Sedge meadows that rated as moderate were dominate by sedges but contained 20-40% coverage of non-native species. Shallow marshes that rated as

[1] Minnesota Board of Water and Soil Resources, 2007. *Comprehensive General Guidance for Minnesota Routine Assessment Method (MnRAM) Evaluating Wetland Function, Version 3.1.*

moderate included at least two species of native aquatic plants, cattails comprised 40-85% cover, and/or purple loosestrife comprised 20-50% cover.

Several (3%) of the wetlands were comprised of multiple community types with different ratings. These wetlands were rated as moderate/high for Vegetative Diversity/Integrity. No single wetland community on the entire West Range Site was rated as low. The above paragraphs describe the characteristics of each community type rates as moderate or high.

Wetland Functional Assessment Summary

The Wetland Functional Assessment Summary rates each wetland on the following parameters on a scale of low, moderate, high, exceptional, or not applicable: maintenance of hydrologic regime, flood/stormwater storage, downstream water quality protection, maintenance of wetland water quality, shoreline protection (if applicable), maintenance of wildlife habitat, maintenance of fish habitat, maintenance of amphibian habitat, aesthetics and recreation, commercial uses (if applicable), groundwater interaction, and sensitivity to storm water. Optional questions for restoration potential and stormwater treatment needs were not answered. The descriptions that follow are taken from the MnRAM Comprehensive Guidance (BWSR, 2007).

- Maintenance of Hydrologic Regime
  The ability of the wetland to maintain a hydrologic regime characteristic of the wetland type is evaluated based upon wetland soil and vegetation characteristics, land use within the wetland, land use within the upland watershed contributing to the wetland, and wetland outlet configuration. All wetlands rated as high.

- Flood and Stormwater Storage/Attenuation
  Wetland characteristics which affect the wetland's ability to store and or attenuate stormwater include: condition of wetland soils; presence, extent, and type of wetland vegetation; presence and connectivity of channels; and most importantly outlet configuration. Most wetlands rated as high and few wetlands rated as moderate.

- Downstream Water Quality Protection
  Runoff characteristics that are evaluated include: land use and soils in the upstream watershed, the stormwater delivery system to the wetland, and sediment delivery characteristics. All wetlands rated as high.

- Maintenance of Wetland Water Quality
  The ability of the wetland to sustain its characteristics is evaluated based on characteristics of the contributing subwatershed and indicators within the wetland. Subwatershed conditions which affect the wetland's sustainability in relation to water quality impacts include: upland land use; sediment delivery characteristics to the wetland; stormwater runoff volumes and rates; and the extent, condition, and width of upland buffer. Most wetlands rated as high, approximately one third of wetlands rated as moderate.

- Shoreline Protection
  This function is rated based on the wetlands opportunity to protect the shoreline; i.e. wetlands located in areas frequently experiencing large waves and high currents have the best opportunity to protect the shore. Three wetlands evaluated on the West Range Site had shoreline characteristics. These wetlands rated as moderate. All other wetlands have no shoreline area, therefore this parameter is not applicable for all wetlands.

- Maintenance of Wildlife Habitat Structure
  This function determines the value of a wetland for wildlife in a more general sense, and not based on any specific species. The characteristics evaluated to determine the wildlife habitat function include: vegetative quality, outlet characteristics (which control hydrologic regime), upland land use, wetland soil type and conditions, water quality of storm water runoff entering the wetland, upland buffer extent, condition, and diversity; the interspersion of wetlands in the area; barriers to wildlife movement; wetland size; vegetative and community interspersion within the wetland; and amphibian breeding potential and overwintering habitat. All wetlands rated as moderate.

- Maintenance of Fish Habitat
  The ability of the wetland to support native fish populations is determined by structural factors within the wetland as well as water quality contributions from upland factors. Wetlands rated as high are lacustrine or riverine and provide spawning/nursery habitat, or refuge for native species (included but not limited to game fish). Wetlands rated as low for fish habitat do not have a direct hydrologic connection to a waterbody with a native fishery or have poor water quality. This parameter was not applicable for most wetlands. Few wetlands rated as low, one rated as moderate, and one rated as high.

- Maintenance of Amphibian Habitat
  This function determines the value of a wetland for amphibians in general, not based on specific species. An adequate wetland hydroperiod and the presence or absence of predatory fish are considered to be limiting variables for this function. In general, wetlands must remain inundated until early to mid-June to allow the larval stages to metamorphose into adults. Because many amphibians are partly terrestrial, the characteristics evaluated to determine the amphibian habitat function include numerous hydrology and terrestrial measures. The characteristics evaluated include: upland land use, upland buffer width, water quality of storm water runoff entering the wetland, barriers to wildlife movement, and amphibian breeding potential and overwintering habitat. Most of the wetlands on the West Range Site rated as high and two rated as moderate. This parameter was not applicable for approximately one fifth of the wetlands surveyed.

- Aesthetics, Recreation, Education, Cultural, Science
  The aesthetics/recreation/education/cultural and science function and value of each wetland is evaluated based on the wetland's visibility, accessibility, evidence

of recreational uses, evidence of human influences (e.g. noise and air pollution) and any known educational or cultural purposes. Accessibility of the wetland is key to its aesthetic or educational appreciation. Also, diversity of wetland types or vegetation communities may increase its functional level as compared to monotypic open water or vegetation. Most of the wetlands surveyed rated as low/moderate. The MnRAM calculation for these wetlands was between the criteria for the low rating and the moderate rating. Approximately one fifth of the wetlands rated as moderate and few rated as low.

- Commercial Uses
  No commercial uses were identified, therefore this parameter is not applicable for all wetlands.

- Groundwater Interaction
  Several wetland and watershed characteristics are evaluated to determine the likely interaction including: wetland soil type, upland land use, upland soil types and wetland size, wetland hydroperiod, wetland outlet characteristics, and topographic relief. Most wetlands on the West Range Site were rated as combination discharge/recharge wetlands.

- Wetland Stormwater Sensitivity
  This parameter is directly tied to the vegetative diversity and integrity parameter. Wetlands with high vegetative diversity are sensitive to the addition of stormwater to the subwatershed. The majority of the wetlands on the West Range Site rated exceptional, approximately one fifth rated as high, and approximately one tenth rated as moderate.

East Range Site (Alternative Site)

Wetland Community Summary

The Wetland Community Summary rates each wetland based upon native plant species diversity, presence of rare plant species, and presence of non-native and invasive species. Ten separate wetlands were delineated on the East Range Site. Several of the wetlands were very large wetland complexes comprised of many community types. Of the ten wetlands surveyed, eight (80%) had a high rating and two (20%) had a moderate rating. A summary of the criteria for vegetative diversity rankings is included in the West Range Site portion of this report. Detailed descriptions the rating system can be found in the MnRAM 3.1 Comprehensive Guidance (BWSR, 2007).

Wetland Functional Assessment Summary

Wetland functions and values were assessed using the MnRAM 3.1 and the same methodology as described for the West Range Site. Summaries of the descriptions of each wetland function assessed are included in the West Range Site portion of this document. Full descriptions and formulas used to assess functions can be found in the MnRAM Comprehensive Guidance (BWSR, 2007).

- Maintenance of Hydrologic Regime
  All wetlands rated as high.

- Flood and Stormwater Storage/Attenuation
  Nine wetlands rated as high. Wetland I rated as moderate, most likely because it is a lacustrine fringe wetland and does not store floodwater well.

- Downstream Water Quality Protection
  All wetlands rated as high.

- Maintenance of Wetland Water Quality
  All wetlands rated as moderate, most likely because of the surrounding land use (large amounts of mining and logging) and lack of upland buffers.

- Shoreline Protection
  One wetland, Wetland I, evaluated on the East Range Site had shoreline characteristics. Wetland I rated as high for this function. All other wetlands have no shoreline habitat, therefore this parameter is not applicable for all other wetlands.

- Maintenance of Wildlife Habitat Structure
  All wetlands rated as moderate.

- Maintenance of Fish Habitat
  This parameter was not applicable for six wetlands on the East Range Site. Wetlands F, G, and H rated as low. Wetland I rated as high because it has a lacustrine fringe and provides habitat for fish.

- Maintenance of Amphibian Habitat
  This parameter was not applicable for four wetlands on the East Range Site. Four wetlands rated as moderate in this category, and two wetlands (Wetlands A and B) rated as high.

- Aesthetics, Recreation, Education, Cultural, Science
  Four of the wetlands surveyed rated as low, four rated as moderate, and two (Wetlands A and B) rated as low/moderate. The MnRAM calculation for Wetlands A and B was between the criteria for the low rating and the moderate rating.

- Commercial Uses
  No commercial uses were identified, therefore this parameter is not applicable for all wetlands.

- Groundwater Interaction
  All wetlands on the East Range Site were rated as a combination discharge/recharge wetlands.

- Wetland Stormwater Sensitivity
  Seven of the wetlands on the East Range Site rated as exceptional and the remaining three rated as high.

Alpha	ID	Wet ID	MnRAM ID	Cowardin	Circ. 39 Type	Acres	Mgmt Class	Veg Diversity	Hydrogeomorphology	Hydrologic Regime	Flood Storage	Downstream Water Quality	Wetland Water Quality	Shoreline Protection	Wildlife Habitat	Fishery Habitat	Amphibian Habitat	Aesthetics, Recreation, Education	Commercial	Groundwater Interaction	Stormwater Sensitivity
A	1	A1	31-056-24-14-001-A	PEMB	Type 3	97.00	Preserve	High	Depressional/Flow-through (apparent inlet and outlet), Depressional/Flow-through (apparent inlet and outlet)	High	Moderate	High	Moderate	Not Applicable		Not Applicable	High	Moderate	Not Applicable	Discharge	High
A	2	A2	31-056-24-11-002-A	PFO1B	Type 7	0.06	Preserve	High	Depressional/Isolated (no discernable inlets or outlets)	High	High	High	High	Not Applicable	Moderate	Not Applicable	Not Applicable	Low / Moderate	Not Applicable	Combination Discharge, Recharge	Exceptional
A	3	A3	31-056-24-11-003-A	PFO1C	Type 7	0.10	Preserve	High	Depressional/Isolated (no discernable inlets or outlets)	High	High	High	High	Not Applicable	Moderate	Not Applicable	Not Applicable	Low / Moderate	Not Applicable	Combination Discharge, Recharge	Exceptional
A	4	A4	31-056-24-10-004-A	PFO1C/F	Type 7	97.00	Manage 1	Moderate	Depressional/Flow-through (apparent inlet and outlet), Depressional/Flow-through (apparent inlet and outlet)	High	High	High	High	Not Applicable	Not Applicable	Not Applicable	Not Applicable	Low / Moderate	Not Applicable	Combination Discharge, Recharge	Exceptional
A	6	A6	31-056-24-15-006-A	PFO1C	Type 7	0.38	Preserve	High	Depressional/Isolated (no discernable inlets or outlets)	High		High	Moderate	Not Applicable	Moderate	Not Applicable	Not Applicable	Low / Moderate	Not Applicable	Combination Discharge, Recharge	High
A	7	A7	31-056-24-15-007-A	PFO1C	Type 7	0.04	Preserve	Moderate	Depressional/Isolated (no discernable inlets or outlets)	High	High	High	High	Not Applicable	Moderate	Not Applicable	Not Applicable	Low / Moderate	Not Applicable	Combination Discharge, Recharge	Exceptional
A	8	A8	31-056-24-15-008-A	PEMC	Type 3	0.04	Preserve	High	Depressional/Isolated (no discernable inlets or outlets)	High	High	High	High	Not Applicable	Moderate	Not Applicable	Not Applicable	Low / Moderate	Not Applicable	Combination Discharge, Recharge	High
A	9	A9	31-056-24-15-009-A	PFO1B	Type 7	0.12	Preserve	High	Depressional/Isolated (no discernable inlets or outlets)	High	High	High	High	Not Applicable	Moderate	Not Applicable	Not Applicable	Low / Moderate	Not Applicable	Combination Discharge, Recharge	Exceptional
A	10	A10	31-056-24-15-010-A	PEMC	Type 3	0.17	Preserve	High	Depressional/Isolated (no discernable inlets or outlets)	High	High	High	High	Not Applicable	Moderate	Not Applicable	High	Low / Moderate	Not Applicable	Combination Discharge, Recharge	High
A	11	A11	31-056-24-10-011-A	PEMC	Type 3	0.13	Manage 1	Moderate	Depressional/Isolated (no discernable inlets or outlets)	High	High	High	High	Not Applicable	Moderate	Not Applicable	High	Low / Moderate	Not Applicable	Combination Discharge, Recharge	Moderate
A	12	A12	31-056-24-10-011-A	PSS1B	Type 6	0.35	Preserve	High	Depressional/Isolated (no discernable inlets or outlets)	High		High	Moderate	Not Applicable	Moderate	Not Applicable	Not Applicable	Low / Moderate	Not Applicable	Combination Discharge, Recharge	High
A	13	A13	31-056-24-10-013-A	PFO1B	Type 7	0.44	Preserve	High	Depressional/Isolated (no discernable inlets or outlets)	High	High	High	High	Not Applicable	Moderate	Not Applicable	Not Applicable	Low / Moderate	Not Applicable	Combination Discharge, Recharge	Exceptional
A	14	A14	31-056-24-10-014-A	PFO1B	Type 7	0.12	Preserve	High	Depressional/Isolated (no discernable inlets or outlets)	High	High	High	High	Not Applicable	Moderate	Not Applicable	Not Applicable	Low / Moderate	Not Applicable	Combination Discharge, Recharge	Exceptional
A	15	A15	31-056-24-10-015-A	PEMC	Type 3	0.26	Preserve	High	Depressional/Isolated (no discernable inlets or outlets)	High	High	High	High	Not Applicable	Moderate	Not Applicable	High	Low / Moderate	Not Applicable	Combination Discharge, Recharge	High
A	16	A16	31-056-24-10-016-A	PEMC	Type 3	0.07	Manage 1	High	Depressional/Isolated (no discernable inlets or outlets)	High	High	High	High	Not Applicable	Moderate	Not Applicable	High	Low / Moderate	Not Applicable	Combination Discharge, Recharge	Exceptional
A	17	A17	31-056-24-10-017-A	PFO1C	Type 7	0.02	Preserve	High	Depressional/Isolated (no discernable inlets or outlets)	High	High	High	High	Not Applicable	Moderate	Not Applicable	High	Low / Moderate	Not Applicable	Combination Discharge, Recharge	Exceptional
A	18	A18	31-056-24-10-018-A	PFO1C	Type 7	0.11	Preserve	High	Depressional/Isolated (no discernable inlets or outlets)	High	High	High	High	Not Applicable	Moderate	Not Applicable	High	Low / Moderate	Not Applicable	Combination Discharge, Recharge	Exceptional
A	19	A19	31-056-24-10-019-A	PFO1C	Type 7	0.02	Preserve	High	Depressional/Isolated (no discernable inlets or outlets)	High	High	High	High	Not Applicable	Moderate	Not Applicable	High	Low / Moderate	Not Applicable	Combination Discharge, Recharge	Exceptional

A	20	A20	31-056-24-10-020-A	PFO1C	Type 7	0.04	Preserve	High	Depressional/Isolated (no discernable inlets or outlets)	High	High	High	High	Not Applicable	Moderate	Not Applicable	High	Low / Moderate	Not Applicable	Combination Discharge, Recharge	Exceptional
A	21	A21	31-056-24-10-021-A	PFO1C	Type 7	0.01	Preserve	High	Depressional/Isolated (no discernable inlets or outlets)	High	High	High	High	Not Applicable	Moderate	Not Applicable	High	Low / Moderate	Not Applicable	Combination Discharge, Recharge	Exceptional
A	22	A22	31-056-24-10-022-A	PFO1C	Type 7	0.04	Preserve	High	Depressional/Isolated (no discernable inlets or outlets)	High	High	High	High	Not Applicable	Moderate	Not Applicable	High	Low / Moderate	Not Applicable	Combination Discharge, Recharge	Exceptional
A	23	A23	31-056-24-10-023-A	PEMC	Type 3	0.24	Preserve	High	Depressional/Isolated (no discernable inlets or outlets)	High	High	High	High	Not Applicable	Moderate	Not Applicable	High	Low / Moderate	Not Applicable	Combination Discharge, Recharge	Exceptional
A	25	A25	31-056-24-10-025-A	PFO1C	Type 7	0.18	Preserve	High	Depressional/Isolated (no discernable inlets or outlets)	High	High	High	High	Not Applicable	Moderate	Not Applicable	High	Low / Moderate	Not Applicable	Combination Discharge, Recharge	Exceptional
A	26	A26	31-056-24-10-026-A	PFO1C	Type 7	0.03	Preserve	High	Depressional/Isolated (no discernable inlets or outlets)	High	High	High	High	Not Applicable	Moderate	Not Applicable	High	Low / Moderate	Not Applicable	Combination Discharge, Recharge	Exceptional
A	27	A27	31-056-24-10-027-A	PFO1C	Type 7	0.07	Preserve	High	Depressional/Isolated (no discernable inlets or outlets)	High	High	High	High	Not Applicable	Moderate	Not Applicable	High	Low / Moderate	Not Applicable	Combination Discharge, Recharge	Exceptional
A	28	A28	31-056-24-10-028-A	PEMC	Type 3	0.22	Preserve	High	Depressional/Isolated (no discernable inlets or outlets)	High	High	High	High	Not Applicable	Moderate	Not Applicable	High	Low / Moderate	Not Applicable	Combination Discharge, Recharge	Exceptional
A	29	A29	31-056-24-10-029-A	PFO1C	Type 7	0.08	Preserve	High	Depressional/Isolated (no discernable inlets or outlets)	High	High	High	High	Not Applicable	Moderate	Not Applicable	High	Low / Moderate	Not Applicable	Combination Discharge, Recharge	Exceptional
A	30	A30	31-056-24-10-030-A	PEMC	Type 3	0.04	Preserve	High	Depressional/Isolated (no discernable inlets or outlets)	High	High	High	High	Not Applicable	Moderate	Not Applicable	High	Low / Moderate	Not Applicable	Combination Discharge, Recharge	Exceptional
A	31	A31	31-056-24-10-031-A	PFO1C	Type 7	0.48	Preserve	High	Depressional/Isolated (no discernable inlets or outlets)	High	High	High	High	Not Applicable	Moderate	Not Applicable	High	Low / Moderate	Not Applicable	Combination Discharge, Recharge	Exceptional
A	32	A32	31-056-24-11-032-A	PEMC	Type 3	0.14	Preserve	High	Depressional/Isolated (no discernable inlets or outlets)	High	High	High	High	Not Applicable	Moderate	Not Applicable	High	Low / Moderate	Not Applicable	Combination Discharge, Recharge	Exceptional
A	33	A33	31-056-24-11-033-A	PEMC	Type 3	0.07	Preserve	High	Depressional/Isolated (no discernable inlets or outlets)	High	High	High	High	Not Applicable	Moderate	Not Applicable	High	Low / Moderate	Not Applicable	Combination Discharge, Recharge	Exceptional
A	34	A34	31-056-24-11-034-A	PEMC	Type 3	0.08	Preserve	High	Depressional/Isolated (no discernable inlets or outlets)	High	High	High	High	Not Applicable	Moderate	Not Applicable	High	Low / Moderate	Not Applicable	Recharge	Exceptional
A	35	A35	31-056-24-11-035-A	PEMC	Type 3	0.02	Preserve	High	Depressional/Isolated (no discernable inlets or outlets)	High	High	High	High	Not Applicable	Moderate	Not Applicable	High	Low / Moderate	Not Applicable	Combination Discharge, Recharge	Exceptional
A	36	A36	31-056-24-11-036-A	PEMC	Type 3	0.04	Preserve	High	Depressional/Isolated (no discernable inlets or outlets)	High	High	High	High	Not Applicable	Moderate	Not Applicable	High	Low / Moderate	Not Applicable	Combination Discharge, Recharge	Exceptional
A	37	A37	31-056-24-11-037-A	PEMC	Type 3	0.36	Preserve	High	Depressional/Isolated (no discernable inlets or outlets)	High	High	High	High	Not Applicable	Moderate	Not Applicable	High	Low / Moderate	Not Applicable	Combination Discharge, Recharge	Exceptional
A	38	A38	31-056-24-11-038-A	PEMC	Type 3	0.07	Preserve	High	Depressional/Isolated (no discernable inlets or outlets)	High	High	High	High	Not Applicable	Moderate	Not Applicable	High	Low / Moderate	Not Applicable	Combination Discharge, Recharge	Exceptional
A	39	A39	31-056-24-11-039-A	PSS1C	Type 6	0.27	Preserve	High	Depressional/Isolated (no discernable inlets or outlets)	High	High	High	High	Not Applicable	Moderate	Not Applicable	High	Low / Moderate	Not Applicable	Combination Discharge, Recharge	Exceptional
A	40	A40	31-056-24-11-040-A	PEMC	Type 3	0.06	Preserve	High	Depressional/Isolated (no discernable inlets or outlets)	High	High	High	High	Not Applicable	Moderate	Not Applicable	High	Low / Moderate	Not Applicable	Combination Discharge, Recharge	Exceptional

B	1	B1	31-056-24-11-001-B	PFO1B	Type 7	0.15	Preserve	High	Depressional/Isolated (no discernable inlets or outlets)	High	High	High	High	Not Applicable	Moderate	Not Applicable	Not Applicable	Low / Moderate	Not Applicable	Combination Discharge, Recharge	Exceptional
B	2	B2	31-056-24-10-002-B	PFO1A	Type 7	0.38	Preserve	High	Depressional/Isolated (no discernable inlets or outlets)	High	High	High	High	Not Applicable	Moderate	Not Applicable	High	Low / Moderate	Not Applicable	Combination Discharge, Recharge	Exceptional
B	3	B3	31-056-24-11-003-B	PFO1A	Type 7	1.06	Preserve	High	Depressional/Isolated (no discernable inlets or outlets)	High	High	High	High	Not Applicable	Moderate	Not Applicable	High	Low / Moderate	Not Applicable	Combination Discharge, Recharge	Exceptional
B	4	B4	31-056-24-11-004-B	PFO1A	Type 7	0.25	Preserve	High	Depressional/Isolated (no discernable inlets or outlets)	High	High	High	High	Not Applicable	Moderate	Not Applicable	Not Applicable	Low / Moderate	Not Applicable	Combination Discharge, Recharge	Exceptional
B	5	B5	31-056-24-11-005-B	PFO1A	Type 7	0.02	Preserve	High	Depressional/Isolated (no discernable inlets or outlets)	High	High	High	High	Not Applicable	Moderate	Not Applicable	High	Low / Moderate	Not Applicable	Combination Discharge, Recharge	Exceptional
B	6	B6	31-056-24-11-006-B	PFO1A	Type 7	0.02	Preserve	High	Depressional/Isolated (no discernable inlets or outlets)	High	High	High	High	Not Applicable	Moderate	Not Applicable	High	Low / Moderate	Not Applicable	Combination Discharge, Recharge	Exceptional
B	7	B7	31-056-24-11-007-B	PFO1A	Type 7	0.03	Preserve	High	Depressional/Isolated (no discernable inlets or outlets)	High	High	High	High	Not Applicable	Moderate	Not Applicable	High	Low / Moderate	Not Applicable	Combination Discharge, Recharge	Exceptional
B	8	B8	31-056-24-10-008-B	PFO1A	Type 7	0.06	Preserve	High	Depressional/Isolated (no discernable inlets or outlets)	High	High	High	High	Not Applicable	Moderate	Not Applicable	High	Low / Moderate	Not Applicable	Combination Discharge, Recharge	Exceptional
B	9	B9	31-056-24-10-009-B	PFO1A	Type 7	0.29	Preserve	High	Depressional/Isolated (no discernable inlets or outlets)	High	High	High	High	Not Applicable	Moderate	Not Applicable	High	Low / Moderate	Not Applicable	Combination Discharge, Recharge	Exceptional
B	10	B10	31-056-24-10-010-B	PFO1A	Type 7	0.06	Preserve	High	Depressional/Isolated (no discernable inlets or outlets)	High	High	High	High	Not Applicable	Moderate	Not Applicable	High	Low / Moderate	Not Applicable	Combination Discharge, Recharge	Exceptional
B	11	B11	31-056-24-11-011-B	PFO1A	Type 7	0.29	Preserve	High	Depressional/Isolated (no discernable inlets or outlets)	High	High	High	High	Not Applicable	Moderate	Not Applicable	High	Low / Moderate	Not Applicable	Combination Discharge, Recharge	Exceptional
B	12	B12	31-056-24-11-012-B	PFO1A	Type 7	0.05	Preserve	High	Depressional/Isolated (no discernable inlets or outlets)	High	High	High	High	Not Applicable	Moderate	Not Applicable	High	Low / Moderate	Not Applicable	Combination Discharge, Recharge	Exceptional
B	13	B13	31-056-24-11-013-B	PFO1A	Type 7	0.16	Preserve	High	Depressional/Isolated (no discernable inlets or outlets)	High	High	High	High	Not Applicable	Moderate	Not Applicable	High	Low / Moderate	Not Applicable	Combination Discharge, Recharge	Exceptional
B	14	B14	31-056-24-11-014-B	PFO1A	Type 7	0.37	Preserve	High	Depressional/Isolated (no discernable inlets or outlets)	High	High	High	High	Not Applicable	Moderate	Not Applicable	High	Low / Moderate	Not Applicable	Combination Discharge, Recharge	Exceptional
B	15	B15	31-056-24-11-015-B	PSS1C	Type 6	11.07	Preserve	High	Depressional/Isolated (no discernable inlets or outlets)	High	High	High	High	Not Applicable	Moderate	Not Applicable	High	Moderate	Not Applicable	Combination Discharge, Recharge	High
B	16	B16	31-056-24-10-016-B	PEMC	Type 3	0.27	Preserve	Moderate	Depressional/Isolated (no discernable inlets or outlets)	High	High	High	High	Not Applicable	Moderate	Not Applicable	High	Low / Moderate	Not Applicable	Combination Discharge, Recharge	Exceptional
B	17	B17	31-056-24-10-017-B	PEMB	Type 2	0.03	Preserve	High	Depressional/Isolated (no discernable inlets or outlets)	High	High	High	High	Not Applicable	Moderate	Not Applicable	Not Applicable	Low / Moderate	Not Applicable	Combination Discharge, Recharge	Exceptional
C	1	C1	31-056-24-12-001-C	PEMC	Type 3	0.31	Preserve	High	Depressional/Isolated (no discernable inlets or outlets)	High	High	High	High	Not Applicable	Moderate	Not Applicable	High	Low / Moderate	Not Applicable	Combination Discharge, Recharge	High
C	2	C2	31-056-24-12-002-C	PEMA	Type 3	0.13	Preserve	High	Depressional/Isolated (no discernable inlets or outlets)	High	High	High	High	Not Applicable	Moderate	Not Applicable	High	Low / Moderate	Not Applicable	Combination Discharge, Recharge	Exceptional

C	3	C3	31-056-24-12-003-C	PEMH	Type 3	2.47	Preserve	High	Depressional/Flow-through (apparent inlet and outlet), Depressional/Flow-through (apparent inlet and outlet), beaver pond	High	Moderate	High	High	Not Applicable	Moderate	Low	High	Low / Moderate	Not Applicable	Combination Discharge, Recharge	Exceptional
C	4	C4	31-056-24-12-004-C	PFO1C	Type 7	79.40	Preserve	High	Depressional/Flow-through (apparent inlet and outlet), Depressional/Flow-through (apparent inlet and outlet), beaver pond	High	High	High	High	Not Applicable		Low	High	Low / Moderate	Not Applicable	Combination Discharge, Recharge	Exceptional
C	6	C6	31-056-24-14-006-C	PFO4	Type 8	0.16	Manage 1	High	Depressional/Tributary (outlet but no perennial inlet or drainage entering from upstream subwatershed)	High	High	High	High	Not Applicable	Moderate	Not Applicable	High	Low / Moderate	Not Applicable	Combination Discharge, Recharge	Exceptional
C	9	C9	31-056-24-12-009-C	PEMC	Type 3	21.85	Preserve	High	Depressional/Flow-through (apparent inlet and outlet), Depressional/Flow-through (apparent inlet and outlet), Lacustrine Fringe (edge of deepwater areas)/Shoreland	High	High	High	High	Moderate	Moderate	Moderate	Moderate	Moderate	Not Applicable	Combination Discharge, Recharge	Exceptional
C	10	C10	31-056-24-22-010-C	PSS1Ad	Type 6	40.00	Preserve	High	Depressional/Flow-through (apparent inlet and outlet), Depressional/Flow-through (apparent inlet and outlet)	High	High	High	Moderate	Not Applicable	Moderate	Not Applicable	High	Low	Not Applicable	Combination Discharge, Recharge	High
C	11	C11	31-056-24-13-011-C	PEMH1	Type 5	0.88	Manage 1	High	Depressional/Tributary (outlet but no perennial inlet or drainage entering from upstream subwatershed), maybe old borrow pit	High	High	High	Moderate	Not Applicable	Moderate	Low	High	Low / Moderate	Not Applicable	Combination Discharge, Recharge	Moderate
C	12	C12	31-056-24-13-012-C	PSS1C	Type 6	0.67	Preserve	High	Depressional/Flow-through (apparent inlet and outlet), Depressional/Flow-through (apparent inlet and outlet)	High	High	High	Moderate	Not Applicable	Moderate	Not Applicable	High	Low / Moderate	Not Applicable	Combination Discharge, Recharge	High
C	13	C13	31-056-24-13-013-C	PSS1C	Type 6	0.90	Preserve	High	Depressional/Flow-through (apparent inlet and outlet), Depressional/Flow-through (apparent inlet and outlet)	High	High	High	Moderate	Not Applicable	Moderate	Not Applicable	High	Low / Moderate	Not Applicable	Combination Discharge, Recharge	High
C	14	C14	31-056-24-13-014-C	PEMH2	Type 5	1.02	Manage 1	High	Depressional/Flow-through (apparent inlet and outlet), Depressional/Flow-through (apparent inlet and outlet)	High	Moderate	High	Moderate	Not Applicable	Moderate	Low	High	Low / Moderate	Not Applicable	Combination Discharge, Recharge	Moderate
C	15	C15	31-056-24-24-015-C	PSS1C	Type 6	4.00	Preserve	High	Depressional/Flow-through (apparent inlet and outlet), Depressional/Flow-through (apparent inlet and outlet)	High	High	High	Moderate	Not Applicable	Moderate	Not Applicable	High	Low / Moderate	Not Applicable	Combination Discharge, Recharge	High
C	16	C16	31-056-24-24-016-C	PEMC	Type 3	14.00	Manage 1	High	Depressional/Flow-through (apparent inlet and outlet), Depressional/Flow-through (apparent inlet and outlet)	High	High	High	Moderate	Not Applicable	Moderate	Not Applicable	High	Low / Moderate	Not Applicable	Combination Discharge, Recharge	Moderate
C	17	C17	31-056-24-23-017-C	LAB2	Type 5	0.54	Manage 1	High	Lacustrine Fringe (edge of deepwater areas)/Shoreland	High	Moderate	High	Moderate	Moderate	Moderate	High	Not Applicable	Moderate	Not Applicable	Combination Discharge, Recharge	Moderate
C	18	C18	31-056-24-23-018-C	PSS1C	Type 6	0.22	Preserve	High	Depressional/Flow-through (apparent inlet and outlet), Depressional/Flow-through (apparent inlet and outlet)	High	High	High	High	Not Applicable	Moderate	Not Applicable	High	Low / Moderate	Not Applicable	Combination Discharge, Recharge	High
C	19	C19	31-056-24-24-019-C	PEMH2	Type 5	5.80	Manage 1	High	Depressional/Flow-through (apparent inlet and outlet), Depressional/Flow-through (apparent inlet and outlet)	High	High	High	Moderate	Not Applicable	Moderate	Low	High	Low / Moderate	Not Applicable	Combination Discharge, Recharge	Moderate
C	20	C20	31-056-24-23-020-C	PSS1C	Type 6	4.18	Preserve	High	Depressional/Flow-through (apparent inlet and outlet), Depressional/Flow-through (apparent inlet and outlet)	High	High	High	High	Not Applicable	Moderate	Not Applicable	High	Moderate	Not Applicable	Combination Discharge, Recharge	High
C	21	C21	31-056-24-14-021-C	PSS1C	Type 6	0.69	Preserve	Moderate	Depressional/Isolated (no discernable inlets or outlets)	High		High	Moderate	Not Applicable	Moderate	Not Applicable	High	Low / Moderate	Not Applicable	Combination Discharge, Recharge	High
C	22	C22	31-056-24-14-022-C	PSS1C	Type 6	0.62	Preserve	High	Depressional/Isolated (no discernable inlets or outlets)	High		High	Moderate	Not Applicable	Moderate	Not Applicable	High	Low / Moderate	Not Applicable	Combination Discharge, Recharge	High
C	23	C23	31-056-24-14-023-C	PSS1C	Type 6	0.22	Preserve	Moderate	Depressional/Flow-through (apparent inlet and outlet), Depressional/Flow-through (apparent inlet and outlet)	High	High	High	Moderate	Not Applicable	Moderate	Not Applicable	High	Low / Moderate	Not Applicable	Combination Discharge, Recharge	High

C	24	C24	31-056-24-15-024-C	PFO2B	Type 8	0.48	Preserve	Moderate	small bog spruce/tamarack bog	High	High	High	Moderate	Not Applicable	Moderate	Not Applicable	Not Applicable	Low / Moderate	Not Applicable	Combination Discharge, Recharge	Exceptional
C	26	C26	31-056-24-13-026-C	PFO1C	Type 7	0.12	Preserve	High	Depressional/Flow-through (apparent inlet and outlet), Depressional/Flow-through (apparent inlet and outlet)	High	High	High	High	Not Applicable	Moderate	Not Applicable	High	Low / Moderate	Not Applicable	Combination Discharge, Recharge	Exceptional
C	27	C27	31-056-24-15-027-C	PFO1C	Type 7	3.05	Preserve	High	Depressional/Flow-through (apparent inlet and outlet), Depressional/Flow-through (apparent inlet and outlet), divided by road	High	High	High	Moderate	Not Applicable	Moderate	Not Applicable	High	Moderate	Not Applicable	Combination Discharge, Recharge	Exceptional
C	28	C28	31-056-24-15-028-C	PFO1C	Type 7	1.10	Preserve	High	Depressional/Flow-through (apparent inlet and outlet), Depressional/Flow-through (apparent inlet and outlet)	High	High	High	Moderate	Not Applicable	Moderate	Not Applicable	High	Moderate	Not Applicable	Combination Discharge, Recharge	Exceptional
D	1	D1	31-056-24-11-001-D	PFO1C	Type 7	0.02	Preserve	High	Depressional/Isolated (no discernable inlets or outlets)	High	High	High	High	Not Applicable	Moderate	Not Applicable	High	Low / Moderate	Not Applicable	Combination Discharge, Recharge	Exceptional
D	2	D2	31-056-24-11-002-D	PEMB	Type 3	1.64	Preserve	High	Depressional/Isolated (no discernable inlets or outlets), Depressional/Flow-through (apparent inlet and outlet), Depressional/Flow-through (apparent inlet and outlet)	High	High	High	High	Not Applicable	Moderate	Not Applicable	Not Applicable	Low / Moderate	Not Applicable	Combination Discharge, Recharge	Exceptional
D	3	D3	31-056-24-11-003-D	PEMC	Type 3	0.01	Preserve	High	Depressional/Isolated (no discernable inlets or outlets)	High	High	High	High	Not Applicable	Moderate	Not Applicable	High	Low / Moderate	Not Applicable	Combination Discharge, Recharge	Exceptional
D	5	D5	31-056-24-14-005-D	PEMC	Type 3	0.10	Preserve	High	Depressional/Isolated (no discernable inlets or outlets)	High		High	Moderate	Not Applicable	Moderate	Not Applicable	High	Low	Not Applicable	Combination Discharge, Recharge	Exceptional
D	6	D6	31-056-24-14-006-D	PFO1C	Type 7	0.09	Preserve	High	Depressional/Isolated (no discernable inlets or outlets)	High		High	Moderate	Not Applicable	Moderate	Not Applicable	High	Low / Moderate	Not Applicable	Combination Discharge, Recharge	Exceptional
D	8	D8	31-056-24-14-008-D	PFO1C	Type 7	2.95	Preserve	High	Depressional/Flow-through (apparent inlet and outlet), Depressional/Flow-through (apparent inlet and outlet)	High	High	High	Moderate	Not Applicable	Moderate	Not Applicable	High	Low / Moderate	Not Applicable	Combination Discharge, Recharge	Exceptional
D	9	D9	31-056-24-14-009-D	PSSA1C	Type 6	1.46	Preserve	High	Lacustrine Fringe (edge of deepwater areas)/Shoreland, western shore of Dunning Lake	High	Moderate	High	High	Moderate	Moderate	Not Applicable	Moderate	Moderate	Not Applicable	Combination Discharge, Recharge	High
D	10	D10	31-056-24-14-010-D	PSS1C	Type 6	0.75	Preserve	High	Depressional/Isolated (no discernable inlets or outlets), connect to wetland D11	High	High	High	High	Not Applicable	Moderate	Not Applicable	High	Low / Moderate	Not Applicable	Combination Discharge, Recharge	Exceptional
D	12	D12	31-056-24-11-012-D	PFO1C	Type 7	0.27	Preserve	High	Depressional/Isolated (no discernable inlets or outlets)	High	High	High	High	Not Applicable	Moderate	Not Applicable	High	Low / Moderate	Not Applicable	Combination Discharge, Recharge	Exceptional
D	13	D13	31-056-24-11-013-D	PFO1C	Type 7	0.06	Preserve	High	Depressional/Isolated (no discernable inlets or outlets)	High	High	High	High	Not Applicable	Moderate	Not Applicable	High	Low / Moderate	Not Applicable	Combination Discharge, Recharge	Exceptional
D	14	D14	31-056-24-11-014-D	PFO1C	Type 7	1.12	Preserve	High	Depressional/Isolated (no discernable inlets or outlets)	High	High	High	High	Not Applicable	Moderate	Not Applicable	High	Low / Moderate	Not Applicable	Combination Discharge, Recharge	High
E	1	E1	31-056-24-14-001-E	PEMC	Type 3	1.37	Preserve	High	Depressional/Flow-through (apparent inlet and outlet), Depressional/Flow-through (apparent inlet and outlet)	High	High	High	Moderate	Not Applicable	Moderate	Not Applicable	High	Low	Not Applicable	Combination Discharge, Recharge	High
E	2	E2	31-056-24-23-002-E	PEMB	Type 2	0.70	Preserve	High	Depressional/Isolated (no discernable inlets or outlets)	High		High	Moderate	Not Applicable	Moderate	Not Applicable	Not Applicable	Low	Not Applicable	Combination Discharge, Recharge	Exceptional
E	3	E3	31-056-24-23-003-E	PEMC	Type 3	0.08	Preserve	High	Depressional/Isolated (no discernable inlets or outlets)	High	High	High	Moderate	Not Applicable	Moderate	Not Applicable	Not Applicable	Low	Not Applicable	Combination Discharge, Recharge	Exceptional

E	4	E4	31-056-24-23-004-E	PEMC	Type 3	0.67	Manage 1	High	Depressional/Isolated (no discernable inlets or outlets)	High	High	High	Moderate	Not Applicable	Moderate	Not Applicable	High	Low	Not Applicable	Combination Discharge, Recharge	Exceptional
E	5	E5	31-056-24-23-005-E	PFO1B	Type 8	0.65	Preserve	Moderate	Depressional/Isolated (no discernable inlets or outlets)	High		High	Moderate	Not Applicable	Moderate	Not Applicable	Not Applicable	Low	Not Applicable	Combination Discharge, Recharge	Exceptional
E	6	E6	31-056-24-23-006-E	PEMC	Type 3	0.42	Preserve	Moderate	Depressional/Isolated (no discernable inlets or outlets)	High		High	Moderate	Not Applicable	Moderate	Not Applicable	High	Low	Not Applicable	Combination Discharge, Recharge	Exceptional
E	7	E7	31-056-24-14-007-E	PEMC	Type 3	1.44	Preserve	High	Depressional/Isolated (no discernable inlets or outlets)	High	High	High	High	Not Applicable	Moderate	Not Applicable	High	Moderate	Not Applicable	Combination Discharge, Recharge	Exceptional
E	9	E9	31-056-24-03-009-E	PEMB	Type 3	0.24	Preserve	High	Depressional/Isolated (no discernable inlets or outlets)	High	High	High	High	Not Applicable	Moderate	Low	High	Moderate	Not Applicable	Combination Discharge, Recharge	Exceptional
E	11	E11	31-056-24-01-011-E	PEMC	Type 3	18.34	Preserve	High	Depressional/Flow-through (apparent inlet and outlet), Depressional/Flow-through (apparent inlet and outlet)	High	High	High	High	Not Applicable	Moderate	Not Applicable	High	Moderate	Not Applicable	Combination Discharge, Recharge	Exceptional
E	12	E12	31-056-23-06-012-E	PEMH	Type 3	5.60	Preserve	High	Extensive Peatland/Organic Flat	High	High	High	High	Not Applicable	Moderate	Low	High	Moderate	Not Applicable	Combination Discharge, Recharge	Exceptional
E	13	E13	31-056-23-05-013-E	PEMC	Type 3	0.13	Manage 1	Moderate	Depressional/Flow-through (apparent inlet and outlet), Depressional/Flow-through (apparent inlet and outlet)	High	High	High	High	Not Applicable	Moderate	Low	High	Moderate	Not Applicable	Combination Discharge, Recharge	Exceptional
E	14	E14	31-056-23-04-014-E	PEMC	Type 3	0.49	Manage 1	Moderate	Depressional/Flow-through (apparent inlet and outlet), Depressional/Flow-through (apparent inlet and outlet)	High	High	High	High	Not Applicable	Moderate	Low	High	Moderate	Not Applicable	Combination Discharge, Recharge	Moderate
E	15	E15	31-056-23-09-015-E	PEMC	Type 3	0.14	Manage 1	Moderate	Depressional/Flow-through (apparent inlet and outlet), Depressional/Flow-through (apparent inlet and outlet)	High	High	High	High	Not Applicable	Moderate	Not Applicable	High	Moderate	Not Applicable	Combination Discharge, Recharge	Moderate
E	16	E16	31-056-23-10-016-E	PEMC	Type 3	0.15	Manage 1	Moderate	Depressional/Isolated (no discernable inlets or outlets)	High	High	High	High	Not Applicable	Moderate	Not Applicable	High	Moderate	Not Applicable	Combination Discharge, Recharge	Moderate
E	17	E17	31-056-23-10-017-E	PEMC	Type 3	0.76	Manage 1	Moderate	Depressional/Flow-through (apparent inlet and outlet), Depressional/Flow-through (apparent inlet and outlet)	High	High	High	High	Not Applicable	Moderate	Not Applicable	High	Moderate	Not Applicable	Combination Discharge, Recharge	Moderate
E	18	E18	31-056-23-10-018-E	PEMC	Type 3	8.24	Manage 1	Moderate	Depressional/Flow-through (apparent inlet and outlet), Depressional/Flow-through (apparent inlet and outlet)	High	High	High	High	Not Applicable	Moderate	Not Applicable	High	Moderate	Not Applicable	Combination Discharge, Recharge	Moderate

Class	Number	Percent
Manage 3	0	0%
Manage 2	0	0%
Manage 1	16	15%
Preserve	90	85%
Totals:	106	100%

Wet ID	MnRAM ID	Cowardin	Circ. 39 Type	Acres	Mgmt Class	Veg Diversity	Hydrogeomorphology	Hydrologic Regime	Flood Storage	Downstream Water Quality	Wetland Water Quality	Shoreline Protection	Wildlife Habitat	Fishery Habitat	Amphibian Habitat	Aesthetics, Recreation, Education	Commercial	Groundwater Interaction	Stormwater Sensitivity
A	31-059-14-32-001-A	PEMC	Type 2	0.25	Preserve	High	Depressional/Isolated (no discernable inlets or outlets)	High	High	High	Moderate	Not Applicable	Moderate	Not Applicable	High	Low/Moderate	Not Applicable	Combination Discharge, Recharge	Exceptional
B	31-059-14-32-001-B	PFOB	Type 7	200.00	Preserve	High	Extensive Peatland/Organic Flat	High	High	High	Moderate	Not Applicable	Moderate	Not Applicable	High	Low/Moderate	Not Applicable	Combination Discharge, Recharge	Exceptional
C	31-059-14-33-001-C	PFOCb	Type 7	270.00	Preserve	High	Depressional/Flow-through (apparent inlet and outlet), Depressional/Flow-through (apparent inlet and outlet), large complex influenced by beaver ponds	High	High	High	Moderate	Not Applicable	Moderate	Not Applicable	Moderate	Moderate	Not Applicable	Combination Discharge, Recharge	Exceptional
D	31-059-14-33-001-D	PSS1B	Type 6	10.00	Preserve	High	Depressional/Flow-through (apparent inlet and outlet), Depressional/Flow-through (apparent inlet and outlet)	High	High	High	Moderate	Not Applicable	Moderate	Not Applicable	Not Applicable	Low	Not Applicable	Combination Discharge, Recharge	High
E	31-059-14-33-001-E	PSS1B	Type 6	5.27	Preserve	High	Depressional/Flow-through (apparent inlet and outlet), Depressional/Flow-through (apparent inlet and outlet)	High	High	High	Moderate	Not Applicable	Moderate	Not Applicable	Not Applicable	Low	Not Applicable	Combination Discharge, Recharge	High
F	31-059-14-33-001-F	PFOC	Type 7	2.10	Preserve	High	Depressional/Flow-through (apparent inlet and outlet), Depressional/Flow-through (apparent inlet and outlet)	High	High	High	Moderate	Not Applicable	Moderate	Low	Moderate	Moderate	Not Applicable	Combination Discharge, Recharge	Exceptional
G	31-059-14-34-001-G	PFOC	Type 7	19.10	Preserve	High	Depressional/Flow-through (apparent inlet and outlet), Depressional/Flow-through (apparent inlet and outlet)	High	High	High	Moderate	Not Applicable	Moderate	Low	Moderate	Moderate	Not Applicable	Combination Discharge, Recharge	Exceptional
H	31-059-14-34-001-H	PFOC	Type 7	19.00	Preserve	High	Depressional/Flow-through (apparent inlet and outlet), Depressional/Flow-through (apparent inlet and outlet)	High	High	High	Moderate	Not Applicable	Moderate	Low	Moderate	Low	Not Applicable	Combination Discharge, Recharge	Exceptional
I	31-059-14-06-001-I	PSS1B	Type 6	1.30	Preserve	Moderate	Lacustrine Fringe (edge of deepwater areas)/Shoreland	High	Moderate	High	Moderate	High	Moderate	High	Not Applicable	Moderate	Not Applicable	Combination Discharge, Recharge	High
J	31-059-14-05-001-J	PEMC	Type 2	0.05	Manage 1	Moderate	Depressional/Isolated (no discernable inlets or outlets)	High	High	High	Moderate	Not Applicable	Moderate	Not Applicable	Not Applicable	Low	Not Applicable	Combination Discharge, Recharge	Exceptional

INTENTIONALLY LEFT BLANK

APPENDIX G
MDOC Scoping Decision

INTENTIONALLY LEFT BLANK

MINNESOTA DEPARTMENT OF COMMERCE

September 8, 2006

TO: Glenn Wilson, Commissioner
DOC (Tel: 651-296-4026)
Edward Garvey, Deputy Commissioner
DOC (Tel: 651-296-9325)

THROUGH: Marya White, Manager
DOC (Tel: 651-297-1773

FROM: William Cole Storm, Staff
DOC Energy Facility Permitting (Tel: 651-296-9535)

RE: DOC Staff Recommendation on Content of the Environmental Impact Statement
Mesaba Energy Project Proposed by Excelsior Energy, Inc.
PUC Docket No. E6472/GS-06-668

ACTION REQUIRED: Signature of the Commissioner on the attached Order, "Environmental Impact Statement Scoping Decision." Once signed, the Department of Commerce (DOC) staff will mail the notice of the order to interested parties.

BACKGROUND:

Excelsior Energy, Inc. is proposing to construct and operate a coal-feedstock Integrated Gasification Combined Cycle ("IGCC") power plant. The proposed power plant will be constructed in two phases; each phase will be capable of producing approximately 606 MW (net) of baseload power.

The U.S. Department of Energy (DOE) selected the Mesaba Energy Project under the Clean Coal Power Initiative Round 2 solicitation for negotiation of a Cooperative Agreement. Under the Cooperative Agreement DOE would provide financial assistance for the proposed project. On October 5, 2005, DOE published a Notice of Intent (NOI) to prepare an Environmental Impact Statement (EIS) in the Federal Register (70 FR 58207). It is DOE's intent to prepare, in cooperation with the Minnesota Department of Commerce and the Minnesota Public Utilities Commission, an EIS that will fulfill the requirements of both the Federal and State environmental review processes.

Excelsior Energy filed a Joint Permit Application for a large electric power generating plant (LEPGP) site permit, a high voltage transmission line (HVTL) routing permit and a pipeline (partial exemption) routing permit on June 16, 2006.

In an Order dated July 28, 2006, the PUC accepted the Joint Permit Application submitted by Excelsior Energy for the Mesaba Energy Project.

The permit application is being reviewed under the Full Review Process (Minn. Rule Chapter 4400) within the Power Plant Siting Act. Under the full permitting process the applicant is required to submit two sites and/or routes (i.e., a preferred and an alternate) for consideration.

As part of the permitting process, the DOC is responsible for certain procedural requirements (i.e., public notice and meetings), issuing the EIS Scoping Decision and the preparation of an Environmental Impact Statement. A contested case hearing will also be conducted following completion of the draft EIS. The PUC has up to one year from the time the application is accepted to complete the process and make a final decision; that decision includes a determination on the adequacy of the EIS and the determination whether to grant the requested permits, as well as, site/route selection and permit conditions.

EIS Scoping Process

The Minnesota Department of Commerce (DOC) held two public informational and Environmental Impact Statement (EIS) scoping meetings for the Mesaba Energy Project on consecutive nights in the vicinities of the preferred and alternative site in northeastern Minnesota.

The first meeting was held on August 22, 2006, at Taconite Community Center in Taconite. The second was held on August 23, 2006, at Hoyt Lakes Arena in Hoyt Lakes.

In satisfying the notification requirements within Minn. Rules 4400.1350, the public informational and EIS scoping meetings were announced in the *EQB Monitor* on July 31, 2006, and published notices appeared in local newspapers, including: the *Scenic Range News* on July 6; the *Duluth News Tribune, Hibbing Daily Tribune, The Mesabi Daily News,* on July 5, the *Grand Rapids Herald-Review* on July 7; and *The East Range Shopper* on July 3. Additionally, notice was sent to those persons whose names are on the EQB general notification list, regional and local governments, and each person whose property is adjacent to any of the proposed sites or routes.

Both meetings began at 7:00 pm Central Daylight Time (CDT) on the respective nights.

The Taconite meeting adjourned at approximately 10:45 pm, and the Hoyt Lakes meeting adjourned at approximately 9:30 pm. Each scoping meeting was preceded by an open house from 4:00 pm to 7:00 pm, during which DOC, U.S. Department of Energy, Office of Fossil Energy, National Energy Technology Laboratory (DOE-NETL) and Excelsior Energy personnel were available to answer questions.

Information packages were available to attendees that included a fact sheet on the State siting and routing process, and the Draft EIS Scoping Document. Also, Excelsior Energy, Inc. exhibited approximately 25 mounted graphic displays illustrating various features of the proposed project.

Collectively, approximately 400 individuals attended the public scoping meetings, including several individuals who attended both meetings. One hundred and fifty-nine individuals signed

the attendance list at Taconite; 123 signed the attendance list at Hoyt Lakes. All attendees were invited to provide comments, either written or spoken, on the proposed project.

Those attendees wishing to speak were given an opportunity to do so. Comment sheets were made available for all attendees wishing to provide written comments.

DOC Energy Facility Permitting (EFP) staff led the presentations and presided over both formal meetings. A court recorder was present at each meeting to ensure that all spoken comments were recorded and legally transcribed. Fifty individuals presented oral comments at the meetings.

In addition, DOC-EFP staff provided an e-mail address for members of the public who preferred to submit their comments electronically, a postal address for those who preferred to mail their comments, a telephone fax number for those who preferred to fax their comments and a toll-free telephone number for those who preferred to speak their comments. In all, 49 comments were submitted via e-mail, US Post Service mail, or fax.

The transcripts and all comments are maintained as part of the Administrative Record.

Comments and Responses

All of the various comment submissions were reviewed to characterize specific issues, concerns, and questions, to ensure the consideration of all substantive concerns. Comments received during the public scoping period are intended to help direct and focus the analysis and contents of the EIS.

Operational Information and Design

Several respondents recommended that project operational information and design details be included in the EIS, including process information, information about the expected efficiency and reliability of the plant, feedstocks, utilities and resource requirements, emissions, and controls. Other comments addressed the physical size of the plant and the expected "footprint", rail alignments, transmission corridors, and various other features.

This information will be incorporated into the project/process description sections of the EIS.

Opinions

A number of comments contained statements of opinion and rhetorical questions, such as the desirability of a particular site. Such comments have not been assimilated into the Scoping Decision in all cases; however, the EIS will attempt to address the subjects raised to the extent appropriate.

Need

Many respondents expressed concerns about the need for the proposed facility, both from the perspective of electricity demand (e.g. exemption from certificate of need) and from the perspective of whether coal use is the best choice to meet that demand.

Because the Department has concluded that this facility qualifies as an "innovative energy project,"[1] and because Minnesota Statue 216B.1694, subdivision 2, item 1, has exempted such a project from demonstrating need, issues related to the need, size or type of the facility are excluded from consideration in this matter. Thus, such issues are not within the scope of the EIS. The DOC will not, as part of this environmental review, consider whether a different size or different type plant should be built instead. Nor will the DOC consider the no-build option.

Viability

Additionally, some of the comments conveyed concern over the long-term operation and viability of the project. Respondents questioned whether the envisioned economic benefits of the proposed facility are valid, and whether economics should outweigh the potentially adverse environmental and human effects of construction and operation of the facility.

There is currently a docket before the PUC pertaining to Excelsior Energy's proposed power purchase agreement (Docket E6472/M-05-1993) that will evaluate many of these concerns.

Overall Environmental Impacts

Numerous comments were received with respect to specific natural resources, environmental welfare and human health issues. The majority of the comments were related to the use of natural resources (e.g., coal, land, water, national parks), the discharge of pollutants to the natural environment (e.g. air, water, wetlands, , CO_2 emissions) and adverse health effects, and the socioeconomic impacts of the project (e.g. jobs, taxes, and property values).

Comments were also received relating to eminent domain, increased vehicular and rail traffic, and demands on local community services (e.g. emergency responders, local water and sewer systems, and tourism/recreation). Concerns were also expressed about connected actions and the cumulative effects of current industrial activities and future projects planned within the vicinity of the Mesaba Energy Project.

These issues, along with the typical LEPGP, HVTL and Pipeline routing and siting impacts, have been incorporated into the proposed Order on the Environmental Impact Statement Scoping Decision.

SCHEDULE: The Draft Environmental Impact Statement will be completed February, 2007.

I:\EQB\Power Plant Siting\Projects - Active\Excelsior - Mesaba Energy\Internal Correspodence\Memo to Commr on content of EIS.doc

[1] *See* Direct Testimony of Eilon Amit, at pp. 5-6, MPUC Docket No. E6472/M-05-1993 (petition of Excelsior Energy, Inc. for approval of a power purchase agreement), filed on September 5, 2006.

In the Matter of Excelsior Energy, Joint (LEPGP, HVTL, Pipeline) Application for the Mesaba Energy Project in Itasca and St. Louis Counties)

ENVIRONMENTAL IMPACT STATEMENT SCOPING DECISION

PUC Docket No. E6472/GS-06-668

The above matter has come before the Commissioner of the Department of Commerce (the Department) for a decision on the content of the Environmental Impact Statement (EIS) to be prepared in consideration of the Joint Permit Application for the proposed Mesaba Energy Project from Excelsior Energy.

Having reviewed the matter, and having consulted with staff, I hereby make the following Order on the content of the EIS:

MATTERS TO BE ADDRESSED

The EIS will address the following matters:

Cover Page
Executive Summary
Table of Contents (Including List of Figures, List of Tables)
Acronyms and Abbreviations
Glossary

1. Purpose and Need for the Proposed Action
    - 1.1 Introduction (Lead Agency, Cooperating Agencies, Project Proponent, Location)
    - 1.2 Clean Coal Power Initiative (Background and project selection)
    - 1.3 Proposed Action (Brief synopsis distinguishing between DOE's Proposed Action and project proponent's Proposed Action)
    - 1.4 Purpose and Need for the Proposed Action
        - 1.4.1 Purpose of the Proposed Action
        - 1.4.2 Need for the Proposed Action
            - 1.4.2.1 DOE Need
            - 1.4.2.2 Minnesota DOC and PUC Role
            - 1.4.2.3 Project Proponent Need
    - 1.5 Regulatory Framework
        - 1.5.1 National Environmental Policy Act
        - 1.5.2 Minnesota State Requirements
            - 1.5.2.1 Minnesota Rules, Chapter 4400
            - 1.5.2.2 Minnesota Statute 216B.1694 Innovation Energy Project

1.5.2.3 Minnesota Rules, Chapter 4415/18 CFR Part 157 of the Natural Gas Act
1.5.2.4 Minnesota Environmental Policy Act
1.5.2.5 Taconite Tax Relief Area
1.5.2.6 Other State Requirements and Permits

1.6 Scoping of the Environmental Impact Statement
1.6.1 NEPA Scoping Process
1.6.2 Minnesota Rule 4400.1700, subpart 2
1.6.2 Public Comments Received
1.6.3 Special CCPI Considerations under NEPA
1.6.4 Region of Influence
1.6.5 Connected Actions (Phase II Power Plant, County Hwy 7 Realignment)

1.7 Associated Actions
1.7.1 Related NEPA Compliance Actions (Including Final Programmatic EIS, Clean Coal Technology Demonstration Program, DOE, November 1989)
1.7.2 Related DOE CCPI Activities
1.7.3 Related Regional Activities

2. Proposed Action and Alternatives

2.1 Description of the Proposed Action (Non-site-specific description and general features of the Mesaba Energy Project)
2.1.1 Technology Selection and Process Description
2.1.1.1 Technology Selection (Including discussion of lessons learned from Wabash River Coal Gasification Repowering Project)
2.1.1.2 Gasification Combined-Cycle Technology
2.1.1.3 Process Components and Major Equipment (potential carbon capture/transport/sequestering)
2.1.1.4 Plant Utility Systems
2.1.2 Resource Requirements (Inputs)
(General needs for the plant that affect site selection and help frame the later discussion of how site alternatives were selected and how sites were eliminated)
2.1.2.1 Feedstock and Flux Requirements
2.1.2.2 Natural Gas Requirements
2.1.2.3 Process Water Requirements
2.1.2.4 Infrastructure Requirements
2.1.2.5 Transportation Requirements
2.1.2.6 Land Area Requirements
2.1.3 Discharges, Wastes, and Products (Outputs)
2.1.3.1 Air Emissions
2.1.3.2 Water Effluents
2.1.3.3 Liquid Wastes
2.1.3.4 Solid Wastes
2.1.3.5 Marketable Products
2.1.3.6 Toxic and Hazardous Materials
2.1.3.7 Pollution Prevention, Recycling, and Reuse
2.1.4 Construction Plans
2.1.4.1 Construction Staging and Schedule
2.1.4.2 Construction Materials and Suppliers
2.1.4.3 Construction Labor
2.1.4.4 Construction Safety Policies and Programs

- 2.1.5 Operation Plans
  - 2.1.5.1 Test Plans
  - 2.1.5.2 Operational Plans
  - 2.1.5.3 Operational Labor
  - 2.1.5.4 Health & Safety Policies and Programs
  - 2.1.5.5 Worst-case Operating Scenario
- 2.2 Alternatives
  - 2.2.1 Alternatives Available to DOE
    - 2.2.1.1 Proposed Action (Proceed continue cost-shared funding beyond preliminary design/project definition)
    - 2.2.1.2 No-Action Alternative (Do not proceed with the cooperative agreement)
  - 2.2.2 Alternatives Sites Considered (by Excelsior Energy)
    - 2.2.2.1 Preferred West Range Site (Including HVTL & Pipeline corridors)
    - 2.2.2.2 Alternative East Range Site (Including HVTL & Pipeline corridors)
    - 2.2.2.3 Alternatives Eliminated from Detailed Evaluation
  - 2.2.3 Alternatives Available to Minnesota PUC
    - 2.2.3.1 Approve Permits for Preferred West Range Site
    - 2.2.3.2 Approve Permits for Alternative East Range Site
    - 2.2.3.3 Disapprove the Permit Application

3. Affected Environment (Note: This section will contain the described information for both the West Range Site and the East Range Site)
   - 3.1 Introduction
   - 3.X Resource Subject (Note: This "X" outline applies to all resource subjects listed below)
     - 3.X.X.1 Regional and Local Conditions
     - 3.X.X.2 Site-specific Conditions
     - 3.X.X.3 Corridor-specific Conditions
   - 3.2 Aesthetics (daytime and nighttime)
     - 3.2.1 Physical Setting
     - 3.2.2 Viewshed
     - 3.2.3 Scenic Resources
   - 3.3 Air Quality and Climate
     - 3.3.1 Local and Regional Climate
     - 3.3.2 Air Quality Regulations
     - 3.3.3 Local and Regional Air Quality
     - 3.3.4 Sources of Air Pollution
     - 3.3.5 Sensitive Receptors (Including Class I Areas)
     - 3.3.6 Air Quality Management Plans
   - 3.4 Geology and Soils
     - 3.4.1 Geology
     - 3.4.2 Mineral Resources and Mining
     - 3.4.3 Seismic Activity
     - 3.4.4 Soils
     - 3.4.5 Prime Farmland
     - 3.4.6 Potential Formations for Geologic Sequestration of CO_2
   - 3.5 Water Resources
     - 3.5.1 Groundwater
     - 3.5.2 Surface Water

3.6 Floodplains
- 3.6.1 Local Hydrology and Drainage
- 3.6.2 Flood Hazard Areas

3.7 Wetlands

3.8 Biological Resources
- 3.8.1 Terrestrial Ecosystems
- 3.8.2 Aquatic Ecosystems
- 3.8.3 Protected Species and Habitats

3.9 Cultural Resources
- 3.9.1 Archeological Resources
- 3.9.2 Historic Resources
- 3.9.3 Native American Cultural Resources (includes Indian treaty rights)

3.10 Land Use
- 3.10.1 Existing Land Use/Human Settlement
- 3.10.2 Zoning Ordinances
- 3.10.3 Local and Regional Land Use Plans

3.11 Socioeconomics
- 3.11.1 Demographics
- 3.11.2 Housing
- 3.11.3 Employment and Income
- 3.11.4 Business and Economy

3.12 Environmental Justice
- 3.12.1 Minority Populations
- 3.12.2 Low-Income Populations

3.13 Community Services
- 3.13.1 Law Enforcement
- 3.13.2 Fire Protection
- 3.13.3 Emergency Response
- 3.13.4 Parks and Recreation

3.14 Utility Systems
- 3.14.1 Water
- 3.14.2 Wastewater
- 3.14.3 Energy
- 3.14.4 Telecommunications

3.15 Traffic and Transportation
- 3.15.1 Local Roads and LOS
- 3.15.2 Rail Access (includes impact of rail traffic on emergency vehicle response)

3.16 Materials and Waste Management
- 3.16.1 Construction Materials
- 3.16.2 Coal and other Feedstock
- 3.16.3 Landfills
- 3.16.4 Recycling Facilities

3.17 Safety and Health
- 3.17.1 Occupational Safety Considerations
- 3.17.2 Community Health Issues
- 3.17.3 Local and Regional Receptors/Health Risk Assessment
- 3.17.4 Electromagnetic Fields (EMF) (Including Henshaw effect)

- 3.18 Noise
  - 3.18.1 Local Ordinances
  - 3.18.2 Existing Sources of Noise
  - 3.18.3 Local and Regional Receptors
- 3.19 Light and Glare
  - 3.19.1 Local Ordinances
  - 3.19.2 Existing Light Sources
  - 3.19.3 Local and Regional Receptors

4. Environmental Consequences (Note: This section will contain the described information for both the West Range Site and the East Range Site)
   - 4.1 Introduction (Including categories of relative impact)
   - 4.X Resource Subject (Note: This "x" outline applies to all resource areas listed)
     - 4.X.1 Approach to Impacts Analysis
       - 4.X.1.1 Region of Influence
       - 4.X.1.2 Method of Analysis
       - 4.X.1.3 Criteria of Impacts
     - 4.X.2 Common Impacts of Proposed Action (Including construction and operation, Phases I & II)
     - 4.X.3 Site-specific Impacts (Including construction and operation, Phases I & II)
       - 4.X.3.1 West Range Site
       - 4.X.3.2 East Range Site
     - 4.X.4 Corridor-specific Impacts (Including construction and operation, Phases I & II)
       - 4.X.3.1 West Range Transmission, Pipeline, and Transportation Corridors
       - 4.X.3.2 East Range Transmission, Pipeline, and Transportation Corridors
     - 4.X.5 Impacts of No-Action Alternative
     - 4.X.6 Mitigation of Adverse Impacts
   - 4.2 Aesthetics
   - 4.3 Air Quality (includes discussions on CO_2)
   - 4.4 Geology and Soils
   - 4.5 Water Resources (surface & groundwater, including the Swan & Mississippi)
   - 4.6 Floodplains
   - 4.7 Wetlands
   - 4.8 Biological Resources
   - 4.9 Cultural Resources (includes Indian treaty rights)
   - 4.10 Land Use/Human Settlement (includes recreational land uses)
   - 4.11 Socioeconomics
   - 4.12 Environmental Justice
   - 4.13 Community Services
   - 4.14 Utility Systems
   - 4.15 Traffic and Transportation (includes impact of rail traffic on emergency vehicle response)
   - 4.16 Materials and Waste Management
   - 4.17 Safety and Health
   - 4.18 Noise
   - 4.19 Light and Glare
5. Summary of Environmental Consequences
   - 5.1 Comparative Impacts of Alternatives
   - 5.2 Potential Cumulative Impacts
   - 5.3 Unavoidable Adverse Impacts and Mitigation

5.4 Irreversible and Irretrievable Commitments of Resources
5.5 Relationship between Short-term Uses of the Environment and Long-term Productivity
6. Regulatory Compliance and Permit Requirements
7. Agencies and Individuals Contacted
8. Distribution List
9. References
10. List of Preparers (Including Conflict of Interest Certification)
11. Index

Appendix

The above guide is not intended to serve as a "Table of Contents" for the EIS document, and as such, the organization of the information and data may not be similar to that appearing in the EIS.

IDENTIFICATION OF PERMITS

The EIS will include a list of permits that will be required for the applicant to construct this project.

ISSUES OUTSIDE OF THE ENVIRONMENTAL ASSESSMENT

Because the Department has concluded that this facility qualifies as an "innovative energy project,"[1] and because Minnesota Statue 216B.1694, subdivision 2, item 1, has exempted such a project from demonstrating need, issues related to the need, size or type of the facility are excluded from consideration in this matter. Thus, such issues are not within the scope of the EIS. The DOC will not, as part of this environmental review, consider whether a different size or different type plant should be built instead. Nor will the DOC consider the no-build option.

SCHEDULE

The EIS shall be completed in February, 2007.

Signed this 13 day of September 2006

STATE OF MINNESOTA
DEPARTMENT OF COMMERCE

Glenn Wilson, Commissioner

I:\EQB\Power Plant Siting\Projects - Active\Excelsior - Mesaba Energy\Environmental Review\Scoping Documents\EIS-scoping-decision.doc

[1] See Direct Testimony of Eilon Amit, at pp. 5-6, MPUC Docket No. E6472/M-05-1993 (petition of Excelsior Energy, Inc. for approval of a power purchase agreement), filed on September 5, 2006.

APPENDIX H

Process Water Discharge Alternatives (West Range Site)

(Note: Color versions of figures in this Appendix are included in the file posted at the DOE NEPA website: http://www.gc.energy.gov/NEPA/final_evironmental_impact_statements.htm)

INTENTIONALLY LEFT BLANK

APPENDIX H1
Environmental Analysis of Alternative Discharge Arrangements

INTENTIONALLY LEFT BLANK

Environmental Analysis of Alternative Discharge Arrangements:

I. Increased Discharge to Holman Lake and Reduced or Eliminated Discharge to Canisteo Mine Pit

II. Relocation of the Holman Lake Outfall to the Swan River

III. Zero Liquid Discharge Treatment

Prepared by Excelsior Energy Inc.
March 15, 2007 **(modified March 20, 2009)**

Introduction

Excelsior has analyzed the environmental impacts of three alternative discharge arrangements for cooling tower blowdown ("CTB") from the West Range Site. These represent potential mitigation alternatives to the base case that was proposed in Excelsior's National Pollution Discharge Elimination System ("NPDES") permit application. The mitigation alternatives are not necessarily mutually exclusive. Since the East Range Site's placement within the Lake Superior watershed requires complete zero liquid discharge treatment of all water, no alternatives analysis was performed for that Site. **[Note: Since publication of the Draft EIS, Excelsior announced its commitment to implement the enhanced ZLD system at the West Range Site, as described under *Discharge Alternative 3: Zero Liquid Discharge Treatment* below. This would reduce the water demand, eliminate blowdown pipelines, and eliminate the majority of water quality impacts as discussed in the Draft EIS. Excelsior has modified its NPDES/SDS permit application for submittal to the Minnesota Pollution Control Agency (MPCA) to reflect the use of the enhanced ZLD system at the West Range Site. Appendix H2, *Final Water Retention, Recovery & Reuse Report*, has been added for the Final EIS and provides a description of the ZLD system that would treat the non-contact wastewater. See Sections 2.0 and 4.5 (Volume 1) of the Final EIS for updated discussions on water balance and potential water quality impacts, respectively.]**

Discharge Alternative 1: Increased Discharge to Holman Lake and Reduced or Eliminated Discharge to Canisteo Mine Pit

Description

An alternative discharge arrangement to that proposed in Excelsior's application for a NPDES permit would be to discharge a greater portion of the IGCC Power Station's cooling tower blowdown ("CTB") to Holman Lake, thereby significantly reducing or eliminating such discharges to the Canisteo Mine Pit ("CMP") under normal operating conditions. Excelsior is exploring this option, the execution of which will be subject to discussions with the Minnesota Pollution Control Agency ("MPCA"). To examine the full effects possible under this alternative, Excelsior has assumed that 100% of the CTB can be discharged to Holman Lake and that the discharge to the CMP can be eliminated. The ultimate allocation may fall between this case and the one presented in Section 4.5 of the Environmental Impact Statement ("EIS"), and the environmental impacts can be interpolated accordingly.

Water Management Plan

Implementing this alternative would require modest adjustments to the water management plan. These adjustments are the result of the reduction of the appropriation for Phase II by 1,700 gpm (based on five cycles of concentration of CTB rather than three) and a reduction of 300-3,100 gpm of availability from the CMP since its water would no longer be replenished by CTB discharge.

In Phase I operations, the 300 gpm lost from the CMP can be replaced, for example by reducing the discharge from the Hill Annex Mine Pit ("HAMP") Complex to Upper Panasa Lake

compared to the base case. The adjusted water management plan is shown in Figure 1. In Phase II, a total of up to 1,400 gpm must be replaced due to the factors mentioned above. The sustainable flows modeled in Excelsior's Water Appropriation Permit application, reproduced in Table 1 below, represent only one possible scenario and were selected to show appropriation from each potential source. An equally likely scenario for Mesaba One and Mesaba Two would be to operate the CMP and HAMP Complex at lower elevations (to obtain flows closer to the maximum estimated flow available) and supplement flows as necessary with water from the Lind Mine Pit and Prairie River.

Figure 1: Phase I Water Operations Flow Rates: West Range IGCC Power Station

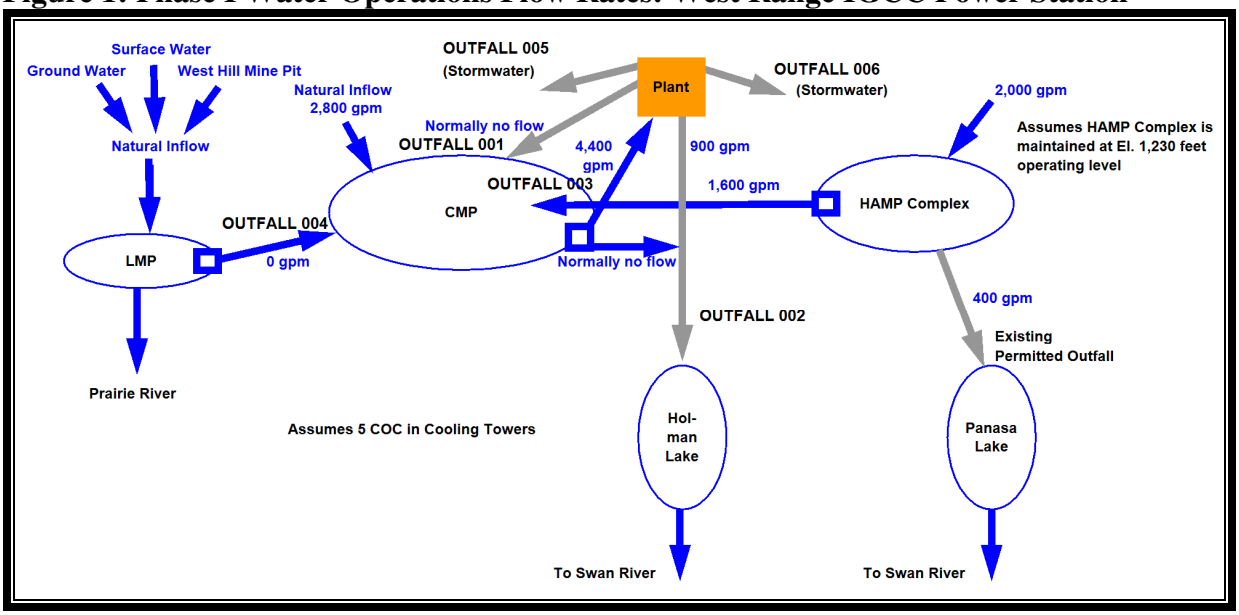

Table 1: Sustainable Flows Modeled in Excelsior's Water Appropriation Permit Application

Water Source	Est. Range of Flow (gpm)	Sustainable Flow for Water Appropriation Modeling (gpm)
Canisteo Mine Pit	810-4,190	2,800
Hill-Annex Mine Pit Complex	1,600-4,030[a]	2,000[b]
Lind Mine Pit	1,600-2,000	1,800[c]
Prairie River	0-2,470[d]	2,470[d]
Discharge from IGCC Power Station	0-3,500	Varies

Notes:
[a]Maximum flow occurs at minimum operating elevation
[b]At an operating elevation of 1,230 ft msl
[c]Based on one summer flow measurement at the LMP outlet and one winter and one summer flow measurement taken at the West Hill Mine Pit outlet
[d]Based on 25% of 7Q10

Figure 2 shows a possible water management plan that could serve Mesaba One and Mesaba Two under the scenario where CTB discharges would be eliminated. In the event that mine pit yields are significantly lower than expected, or during times of extended drought, the option would exist to revert back to the originally proposed arrangement with discharge into the CMP.

Figure 2: Phase I and II Water Operations Flow Rates: West Range IGCC Power Station

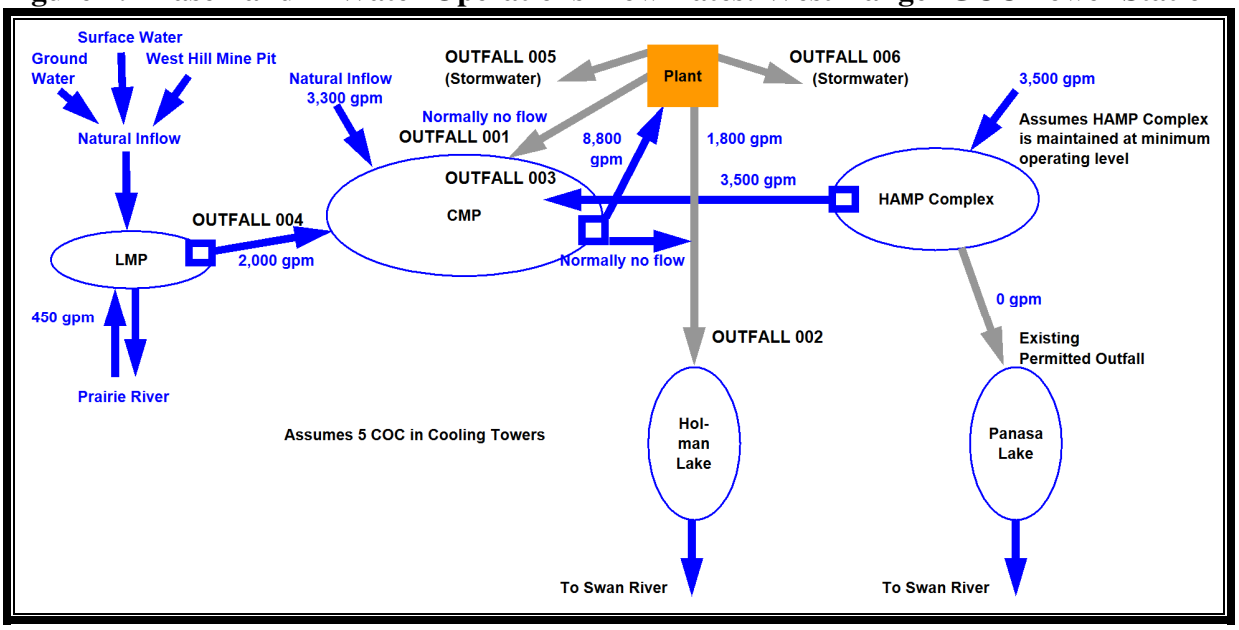

Water Quality

The most direct environmental impact associated with this alternative is that by eliminating CTB discharges to the CMP, the water quality of the CMP would remain relatively constant, avoiding the gradual increase in the concentration of pre-existing constituents due to the evaporation of cooling water. Additionally, the water quality of the CTB would no longer escalate as the source water quality would remain relatively constant. This would allow the cooling towers to operate at five cycles of concentration rather than three as specified in the base case. Table 2 shows the estimated concentration of chemical constituents in the CTB discharge for this case. See the section below entitled "Swan River" for further discussion of water quality impacts that would result from water quality trading.

Table 2: Expected IGCC Power Station Discharges and Applicable State Numerical Water Quality Standards

Constituent	Units	Class 2 WQ Standard	Anticipated Effluent Water Quality – Phase I & II (5 COC)
Hardness	mg/l	250	1,540
Alkalinity	mg/l	n/a	--
Bicarbonate	mg/l	n/a	869
Calcium	mg/l	n/a	--
Magnesium	mg/l	n/a	--
Iron	mg/l	n/a	--
Manganese	mg/l	n/a	--
Chloride	mg/l	230	26
Sulfate	mg/l	n/a	487
TDS	mg/l	700	1,685
pH	mg/l	6 - 9	6 - 9
Aluminum	ug/l	125	50
Arsenic	ug/l	53	--
Barium	ug/l	--	--
Cadmium	ug/l	2.0[1]	Note 3
Chromium (6+)	ug/l	32[1]	Note 3
Copper	ug/l	15[1]	Note 3
Fluoride	mg/l	n/a	--
Mercury	ng/l	6.9	4.5
Nickel	ug/l	283[1]	25
Potassium	mg/l	n/a	20
Selenium	ug/l	5	Note 3
Sodium	mg/l	--	--
Specific Conductivity	umhos/cm	1000	2,400[4]
Zinc (3)	ug/l	191[1]	Note 3
Phosphorus	mg/l	1[2]	0.02

[1]Indicates a hardness based standard. It is assumed hardness in the receiving water is >200 mg/L based on available data.
[2]Phosphorus standard is an effluent limit and not a water quality standard.
[3]Results below detection limit.
[4]Values depicted reflect assumed values in the groundwater and LMP

Due to the increased discharge rate of CTB to Holman Lake, concentrations of chemical constituents in Holman Lake would increase, but would not escalate over the long term. Figures 3 and 4 show the modeled concentration of total dissolved solids (TDS) and mercury, respectively, over the life of the project for the base case with CTB discharges to both the CMP and Holman Lake. Figures 5 and 6 show the same for the alternative where CTB discharge to the CMP is eliminated. As in the base case, a variance for hardness and TDS, the standards for which are based on aesthetic rather than health-related concerns, may be necessary.

Figure 3: Water Quality (TDS) of Receiving Waters for Base Case: Discharge to Holman Lake and Canisteo Mine Pit

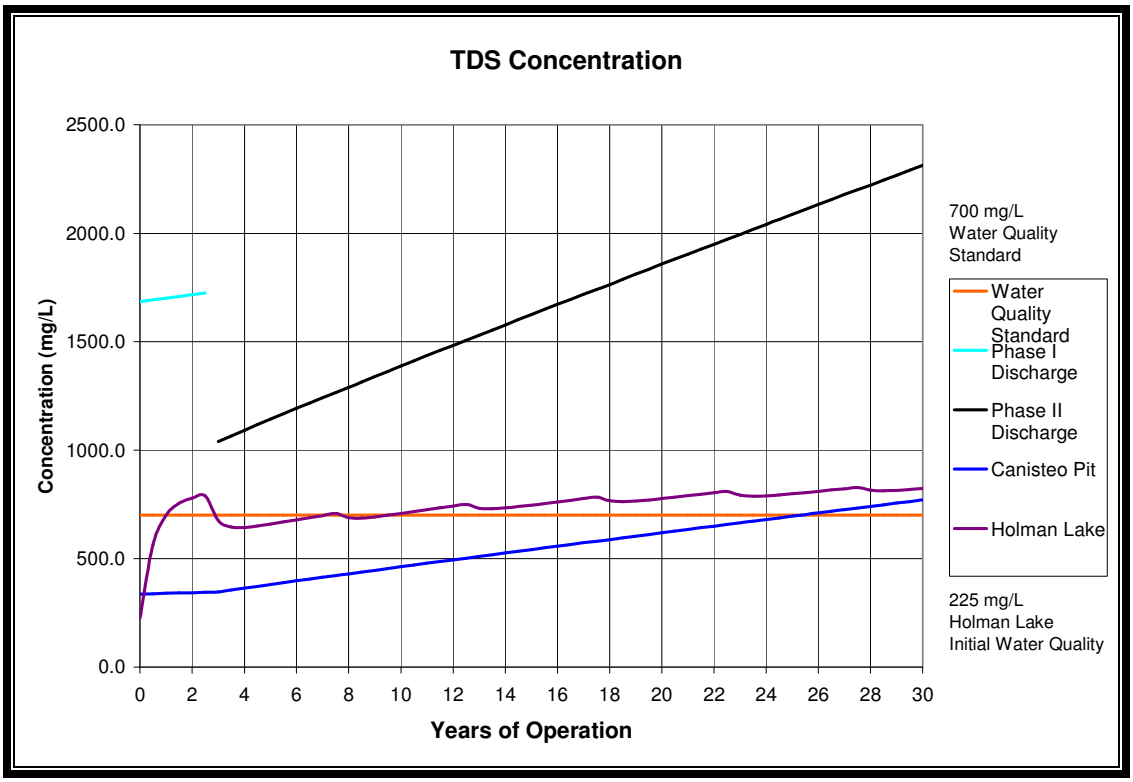

Figure 4: Water Quality (Mercury) of Receiving Waters for Base Case: Discharge to Holman Lake and Canisteo Mine Pit

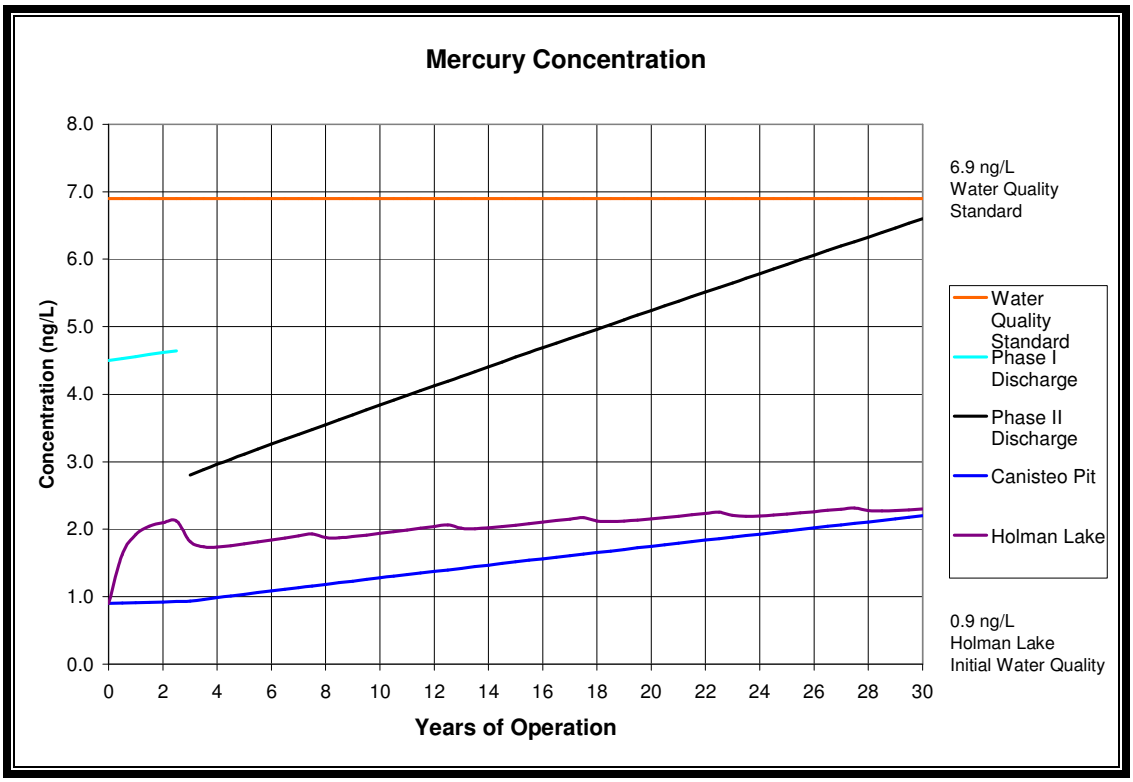

Figure 5: Water Quality (TDS) of Receiving Waters for the Alternative Case: Discharge to Holman Lake Only

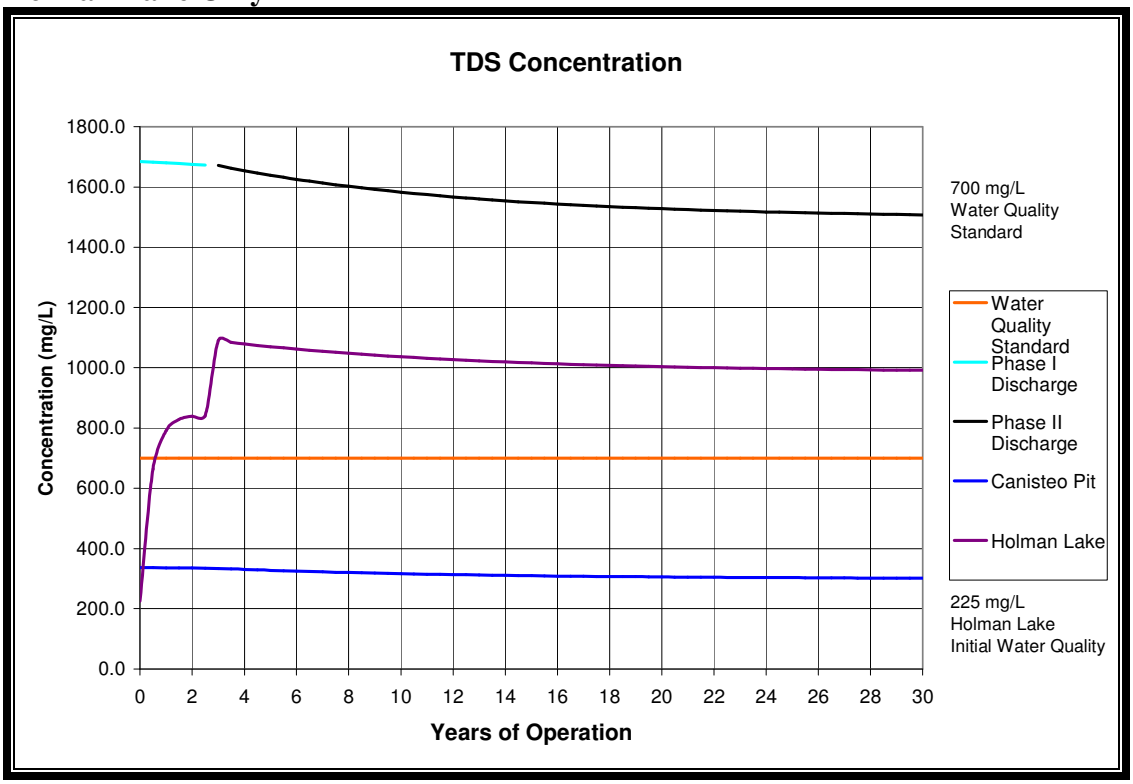

Figure 6: Water Quality (Mercury) of Receiving Waters for the Alternative Case: Discharge to Holman Lake Only

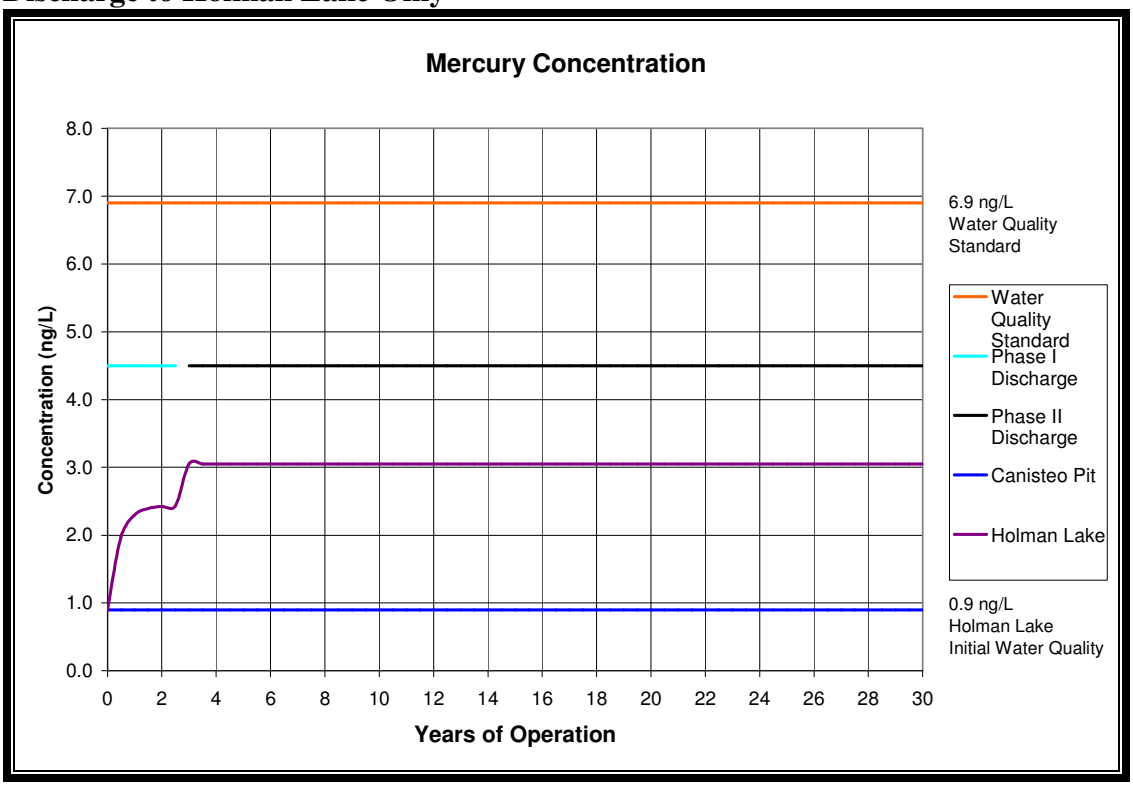

Sulfate

There is currently no water quality standard applicable to sulfate concentrations in the CMP or Holman Lake. However, the MPCA has raised questions regarding the potential relationship between sulfate and the generation of methyl mercury in certain aquatic environments.[1] While it has been demonstrated that the addition of sulfate may stimulate the formation of methyl mercury in peatlands,[2] the relationship may depend on several variables in addition to sulfate. These include organic carbon, the fraction of bioavailable mercury, the presence of adjacent wetlands and peat bogs in particular, and the microbial community structure (not all sulfate reducing bacteria methylate mercury).[3] Therefore, it is unclear at this time whether there would

---

[1] May 4, 2006 letter from Minnesota Pollution Control Agency (Richard Sandberg, Manager, Air Quality Permits Section, Industrial Division) to Minnesota Department of Commerce (William Storm, Energy Facility Permitting), page 4. In the letter, the MPCA indicates that increases in sulfate in certain aquatic environments can contribute to the formation of methylmercury in receiving waters.

[2] Branfireun BA, Roulet NT, Kelly CA & Rudd JWM (1999) In situ sulphate stimulation of mercury methylation in a boreal peatland: toward a link between acid rain and methylmercury contamination in remote environments. Global Geochemical Cycles 13: 743-750. Branfireun BA, Bishop K, Roulet NT, Granberg G & Nilsson M (2001) Mercury cycling in boreal ecosystems: The long-term effect of acid rain constituents on peatland pore water methylmercury concentrations. Geophys. Res. Lett. 28: 1227-1230.

[3] Macalady JL, Mack EE & Scow KM (2000) Sediment Microbial Community Structure and Mercury Methylation in Mercury-Polluted Clear Lake, California. Appl. Environ. Microbiol. 66: 1479. Porvari P & Verta M (1995)

be any impact associated with sulfate discharged to Holman Lake via the CTB from Mesaba One and Mesaba Two. To the extent appropriate, this matter will be addressed during the National Pollutant Discharge Elimination System permitting process.

Thermal impacts are expected to be minimal. The thermal modeling presented in the Environmental Supplement, which showed negligible impacts, was based upon a 2,400 gpm flow, which exceeds any flow into Holman Lake that is considered in the base case or this alternative case.

Outflow from Holman Lake

Water flows through Holman Lake and into the Swan River would increase compared to the base case. Table 3 summarizes the conservatively modeled existing flow and the increase in both scenarios. While the relative increase appears large, Holman Lake has historically experienced large fluctuations in flows caused by dewatering flows from nearby mining activity and beaver dam management. Therefore, historical outflows from Holman Lake have far exceeded those that will result from full CTB discharge, and scouring of the outflow from the lake is not likely to be of concern.

Table 3: Water Flows through Holman Lake

	Existing Flow	Maximum CTB Discharge	Total Outflow
Base Case	**1,215 gpm**	**825 gpm**	**2,040 gpm**
Alternative Case	**1,215 gpm**	**1,800 gpm**	**3,015 gpm**

Swan River

The headwaters of the Swan River are located about nine river-miles upstream of Holman Lake. At the outlet of Swan Lake, the origin of the Swan River, the average flow is approximately 28,000 gpm.[4] No forks in the Swan River occur between its origin and Holman Lake and, within that stretch, three streams from named lakes empty therein (these streams emanate from Snowball Lake, Lower Panasa Lake, and Twin Lakes); therefore, the flow rate at the point at which Mesaba's discharge enters the Swan River is expected to be minimal in relation to the existing flow except during periods of extremely low flow in the Swan River.

The Swan River is impaired for mercury and dissolved oxygen (for which phosphorus is the surrogate chemical of concern). Excelsior anticipates that water quality trading – that is, reducing mercury and phosphorus emissions via contractual arrangements with nearby sources in order to offset Mesaba's discharges – will be a valid approach to addressing these regulatory concerns. The MPCA is developing water quality trading rules, but has already issued NPDES

Methylmercury production In flooded soils - a laboratory study. Water, Air, and Soil Poll. 80: 765-773.

[4] Minnesota Steel Project Draft Environmental Impact Statement. p. 4-50. Feb. 2007 (*see* http://files.dnr.state.mn.us/input/environmentalreview/minnsteel/deis/deis_1.pdf).

permits in the past that featured such trading.[5]

Based on preliminary discussions with nearby sources in the watershed, trading opportunities do exist, since additional controls and improved operating practices could reduce their emissions. It is anticipated that under MPCA oversight, Excelsior could enter into agreements with these nearby sources to ensure that the reductions would take place and to compensate the sources for the cost of the reductions. Trading would occur at a ratio of greater than 1:1, thereby reducing the mass loading of mercury and phosphorus to the Swan River. Therefore, under a water quality trading arrangement, the impairment to the Swan River and downstream waters would decrease.

Air Quality

Particulate matter emissions due to cooling tower drift would decrease slightly due to the water quality of the Canisteo Mine Pit remaining relatively constant. Instead of 39 tons/year for Mesaba One and Mesaba Two, worst case emissions would be expected to decrease to 35 tons/year.

Discharge Alternative 2: Relocation of the Holman Lake Outfall to the Swan River

Description

An alternative discharge arrangement to that proposed in Excelsior's application for a NPDES permit would be to relocate the outfall currently proposed into Holman Lake to instead discharge to the Swan River. This alternative could occur independently of or in conjunction with Discharge Alternative 1 as discussed above. It would reduce the concern of localized impacts associated with discharge into a relatively small lake, and may expand the options for water quality trading mentioned in Alternative 1. Environmental impacts associated with the blowdown pipeline alignment could be minimized by following the proposed HVTL and natural gas pipeline corridors for approximately 4.5 miles to where they cross the Swan River. This crossing is less than half a mile upstream from the confluence of Holman Lake's discharge and the Swan River. While the currently proposed pipeline from the plant to Holman Lake could be eliminated, it may be necessary to maintain the proposed tie-in linking the CMP to Holman Lake in order to manage water levels in the CMP.

Two related alternatives include discharge to the Mississippi River and the Prairie River. The large distance to the Mississippi River (approximately 13 miles) rules it out as a reasonable alternative, even though the larger flow would alleviate some other concerns. The Prairie River has larger flows than the Swan River, but not large enough to dismiss the fundamental

---

[5] NPDES permits for Southern Minnesota Beet Sugar Cooperative (2004) and Rahr Malting (1997) both included water quality trading.

environmental concerns associated with blowdown discharge such as the need for variances and mercury impairment. Also, it is anticipated that there would be fewer trading partners available in the Prairie River watershed than the Swan River. Finally, the Prairie River empties into Prairie Lake approximately 13 river miles downstream of the potential discharge point. This lake appears to have many residential property owners located on its shoreline and is impaired for fish consumption due to mercury, adding significant uncertainty regarding the practicality of obtaining the necessary discharge permit.

Water Quality

The most direct environmental impacts of this alternative are associated with the water quality of Holman Lake and Swan River. Because Holman Lake flows into the Swan River, the mass load on the watershed of chemicals of concern, such as phosphorus and mercury, would not change under this alternative. However, the allocation of localized impact between Holman Lake and Swan River would be affected.

Under this alternative, impacts to the water quality of Holman Lake as illustrated in Figures 3-6 would be avoided – i.e, concentrations of TDS, hardness, phosphate, mercury, etc. within the lake would remain at background levels. On the other hand, impacts to the Swan River's water quality would be somewhat magnified, as this alternative bypasses the dilutive effect of discharging into Holman Lake. As discussed in Alternative 1, the average flow of Swan River is at least 28,000 gpm, while the maximum discharge to the Swan River would be 1,800 gpm. Therefore, the impact to water quality during normal flow conditions would be modest. However, because the 7Q10 flow of the Swan River is just 800 gpm,[6] the river could consist primarily of CTB during conditions of extremely low flows. While flow augmentation during such periods could be considered a positive effect, the TDS and hardness concentrations would be relatively high. The maximum possible discharge concentrations would be the same as those identified in Table 2, and the allowable mixing zone of 25% of the 7Q10 flow (200 gpm) would do little to dilute those concentrations. As with the base case, a variance request for TDS and hardness, the standards for which are based on aesthetic rather than health-related concerns, may be necessary.

Thermal Impacts

As with water quality, because the blowdown discharge flow would be approximately 6% of the river flow, this alternative would have minimal thermal impacts during average flow conditions. However, the impact could become very significant during low flows, and would most likely introduce the need for a variance for the temperature of the discharge. During worst-case conditions, blowdown water would leave the plant at approximately 86°F during peak summer temperatures,[7] which just meets absolute state water quality standards, but would exceed the relative limit of 3°F above ambient water temperatures (Minn. R. 7050.0220 subp. 5). Cooling

---

[6] United States Geological Survey. Low Flow Application for the Swan River near Calumet, MN. Available: http://gisdmnspl.cr.usgs.gov/lowflow/contData/logPearson/p05216860.pdf.

[7] Excelsior Energy. Appendix E to the Mesaba Energy Project NPDES Permit. Submitted to the MPCA June 2006.

ponds of sufficient size may be able to mitigate thermal concerns. Otherwise, due to the low 7Q10 value for the Swan River, it is unlikely that this standard could be met without a variance.

Sulfate and Other Localized Concerns

The possibility of localized impacts, such as the impact of sulfate on the formation of methyl mercury and concerns surrounding the outflow of Holman Lake, would be reduced. While the possibility of methyl mercury formation would not be completely eliminated, some factors that are suggested to be involved with its formation would be diminished. There would generally be less contact with adjacent wetlands under this alternative, and sulfate would be more fully diluted under normal flow conditions. While some localized impact to the Swan River near the point of discharge is possible (see variance discussions above), they are of lesser concern in a flowing river than in a lake.

Pipeline Alignment Impacts

While this alternative would increase the total miles of blowdown pipeline by approximately two miles, it would be along existing corridors, preventing any impacts associated with new pipeline corridors. A 150-ft right-of-way ("ROW") is proposed where HVTL and natural gas pipelines share a corridor. The corridor may be able to accommodate the blowdown pipeline as proposed, or slight additional widening may be necessary. Therefore, while such widening may cause additional wetland and land use impacts, the impacts would be very small, and would be minimized by combining infrastructure corridors to the maximum extent possible.

Discharge Alternative 3: Zero Liquid Discharge Treatment

Description

An alternative to the discharge proposed in Excelsior's NPDES permit application would be to eliminate all CTB discharge through the use of Zero Liquid Discharge ("ZLD") treatment. A ZLD system on the West Range would be implemented as described for the East Range Site in Section 4.5.4 of the EIS. Outside of the Great Lakes watershed and extremely arid regions, ZLD treatment of power plant cooling water is a nearly unprecedented level of treatment. This alternative would eliminate all CTB blowdown discharge and associated pipelines from the facility and would reduce the facility's water appropriation needs. ZLD treatment would incur significant capital and O&M costs, reduce plant efficiency and output, and produce additional solid waste and cooling tower drift. It is possible that this alternative could be combined with either of the first two by using ZLD treatment of a slipstream of the CTB, although such an arrangement may be even less cost effective than ZLD alone. **[Note: Since publication of the Draft EIS, Excelsior has announced its commitment to implement the enhanced ZLD system at the West Range Site, as described under this alternative. See Section 4.5 (Volume 1) of the Final EIS for more details on changes to the water balance and water quality impacts. Note that some of the numerical values as stated in this section were estimated for the Draft EIS. Since publication of the Draft EIS, further analysis, such as wetlands impacts, have been conducted and represent more current estimates. For updated impact estimates, see the various resource sections in Volume 1 of the Final EIS.]**

Water Management Plan
Compared to the base case from the permit application, maximum water appropriation needs for two Mesaba phases under this alternative would decrease from 10,300 gpm to 7,000 gpm.[8] However, the proposed CTB discharge from the plant to the CMP of 2,675 gpm (for Mesaba One and Two) would also be eliminated. Overall, the water needs are up to 625 gpm less than the base case, and up to 1,800 gpm less than required under Alternative 1.

Water Quality
As all direct discharges from the plant would be eliminated, water quality impacts to Holman Lake and the CMP as identified in Figures 3-6 would be avoided – i.e., concentrations of TDS, hardness, phosphate, mercury, etc. within the lake would remain at background levels. There would also be no direct water quality impact to the Swan River. The possibility of localized impacts identified for the base case and other alternatives would also be eliminated.

Solid Waste Disposal
The ZLD system for treating CTB would produce significant amounts of non-hazardous salts that must be transported from the site and landfilled. On the East Range, Mesaba One and Two could produce up to 24,000 tons/year of solid waste from this treatment based on the worst-case source water quality, which has a TDS of up to 1800 mg/L.[9] Because the source water quality on the West Range is much better (approximately 340 mg/L TDS[10]), the maximum salt production from ZLD treatment of the CTB would be less than 5,000 tons/year for Mesaba One and Two.

Plant Capacity and Efficiency
Operation of the ZLD system would consume electricity, adding to the parasitic load within the facility, which has two closely connected effects. First, it reduces the net output capacity of the plant. Second, it reduces the efficiency of the plant proportionately to this reduction in capacity. On the East Range Site, plant capacity could be reduced by up to 2 MW (approximately 0.3%), and the corresponding heat rate increase would be 31 Btu/kWh. As mentioned above, the source water quality at the West Range Site is superior, which is likely to reduce the parasitic load of ZLD treatment versus the East Range Site. Therefore, a 2 MW reduction in plant capacity and 31 Btu/kWh increase in heat rate are likely to overestimate this effect for the West Range Site. However, to the degree that efficiency is reduced, air emissions on a per megawatt hour basis will increase (by a maximum of about 0.3%).

Air Quality
The ZLD system will increase particular matter emissions due to cooling tower drift, as the cycles of concentration at which cooling towers operate would likely be increased. If this figure were doubled, particulate emissions due to drift would increase from 39 tons/year to 78 tons/year, resulting in facility wide particulate emissions of 532 tons/year instead of 493 tons/yr.

---

[8] Excelsior Energy. Appendix D to the Mesaba Energy Project NPDES Permit. Submitted to the MPCA, June 2006.
[9] Excelsior Energy. Environmental Supplement to the Joint Permit Application. Submitted to the MN Public Utilities Commission, June 2006. p. I-155.
[10] *Ibid.*

Pipeline Alignment Impacts

Under this alternative, all blowdown pipelines from the plant could be eliminated. While most pipelines share corridors with other infrastructure, the approximately two mile blowdown pipeline to Canisteo Mine Pit represents corridor that could be completely eliminated. Wetland impacts may be reduced by up to 17 acres, and land use impacts would be reduced as well.

Summary

The quantifiable differences between the alternatives are tabulated below. Note that Alternative 2 reflects the base case with the Holman Lake discharge diverted to the Swan River. This alternative could be combined with Alternative 1, which would produce the results shown for that alternative. As described in the analysis, Alternative 1 involves a range of possible flow allocations, and it was assumed for the purposes of this summary that all discharge was redirected from the CMP to Holman Lake. The figures below represent maximum values.

Table 4: Quantitative Impact Comparison across Alternatives

Parameter	**Base Case**		**Alt. 1**		**Alt. 2**	
Number of Phases	1	2	1	2	1	2
Discharge to CMP (gpm)	300	2,675	0	0	300	2,675
Discharge to Swan River Watershed (gpm)	600	825	900	1,800	600	825
Net Water Needed (gpm)	4,100	7,625	4,400	8,800	4,100	7,625
Cycles of Concentration	5	3	5	5	5	3
PM Emissions from Drift (tons/yr)	20	39	18	35	20	39

Table 4 (con't)

Parameter	**Alt. 1 & 2**		**Alt. 3**	
Number of Phases	1	2	1	2
Discharge to CMP (gpm)	0	0	0	0
Discharge to Swan River Watershed (gpm)	900	1,800	0	0
Net Water Needed (gpm)	4,400	8,800	3,500	7,000
Cycles of Concentration	5	5	≥10	≥10
PM Emissions from Drift (tons/yr)	18	35	39	78

APPENDIX H2
Water Retention, Recovery & Reuse Report

INTENTIONALLY LEFT BLANK

Mesaba Energy Project
Final Water Retention, Recovery & Reuse Report

West Range Site
Taconite, Minnesota

Prepared for:

Excelsior Energy Inc.

11100 Wayzata Blvd.
Minnetonka, MN 55305

Prepared By:

Granherne
a KBR company

Granherne Inc.

601 Jefferson
Houston, TX 77002-7900

Project Number J5682

Revision H
January 14, 2009

Appendix H

TABLE OF CONTENTS

Section	Description	Page
1.0	**INTRODUCTION**	**2**
2.0	**PROJECT BACKGROUND**	**3**
2.1	Technical Background	3
2.2	Permit Approach	4
2.3	Overall Water/Wastewater Management	5
2.4	Assumptions/Requirements	6
3.0	**WATER UTILITY GENERAL DESCRIPTIONS**	**8**
3.1	Raw Water Supply System	8
3.2	Raw Water Quality	10
3.3	ZLD System	12
3.4	Wastewater Characterization	13
3.5	Design Feed to the ZLD System	13
4.0	**DETAILED PROCESS DESCRIPTIONS**	**16**
4.1	Precipitation Retention and Recovery System	16
4.2	ZLD System	17
4.3	System Redundancy and Capacity Requirements	21
4.4	Waste Streams Generated	23
4.5	Future Considerations	24
5.0	**REFERENCES**	**25**
	APPENDIX 1	**26**

1.0 INTRODUCTION

The following is a report for a water retention, recovery and reuse system to service the Excelsior Energy Inc. (Excelsior) Mesaba Energy Project to be located in Taconite, Minnesota (its "West Range Site" in Itasca County). The purpose of this report is to supplement Excelsior's National Pollutant Discharge Elimination System (NPDES) permit application dated June 18, 2006, by describing the water/wastewater management systems to be used at the site to achieve Excelsior's objectives of eliminating all wastewater discharges including storm water discharges associated with industrial activities within the facility's footprint and achieving maximum water recovery and reuse of such wastewaters.

Section 2.0 of this report provides a discussion of the project facility, permit approach, overall water/wastewater management and assumptions used for the systems. A general description of the raw water supply, water retention and recovery and reuse systems are provided in **Section 3.0**. **Section 4.0** provides a more detailed description of the water retention and recovery and reuse systems.

Because the Mesaba facility is still under development/engineering, and because of the evaluation/engineering work required to completely configure the system operation and integrate it into the production operations, the information provided herein is preliminary in nature. As detailed engineering work is performed, the best overall design solution to achieve Excelsior's objectives will be refined.

The intent of this report is to provide a discussion/description of the system operations to be utilized at the facility. In particular, it addresses the design philosophy, general character and approach to be used for the systems so that the permit reviewer can see that the site can achieve its zero discharge objectives. Water and water constituent balances are provided for the project. Once the facility engineering is more established and the system operation can be more completely described an updated version of this report can be provided, along with a set of plans and specifications for the system.

2.0 PROJECT BACKGROUND

The technical background for the project, including a description of the proposed production facility is provided in this section. Additionally, a summary of the overall strategy for the raw water supply, water retention and recovery and reuse systems are provided.

2.1 Technical Background

Excelsior is in the process of seeking regulatory approvals for the first two phases of its Mesaba Energy Project in Taconite, Minnesota. The Project's first phase is included in the portfolio of the U.S. DOE Clean Coal Power Initiative (CCPI) Round 2 series of projects, the capstone of the National Coal RD&D Program managed by the U.S. Department of Energy (DOE) Office of Fossil Energy. It will demonstrate a commercial utility-scale "next-generation" Integrated Gasification Combined Cycle (IGCC) electric power generating facility fueled by coal or other solid, petroleum based feedstocks. The two phases consist of two nominal 600 MW units, Mesaba One and Mesaba Two, for a total nominal capacity of 1,200 MW. A planning perspective of the proposed facilities is shown below in Figure 1-1.

Figure 1-1

The Mesaba Energy Project will deploy substantial technology advancements in gasification, air separation and other plant systems and their integration. It will incorporate design and operational lessons learned from the successful but smaller-scale 262 MW Wabash River Coal Gasification Repowering Project, located in Terre Haute, Indiana; a previous Round 1 DOE clean coal technology project.

2.2 Permit Approach

Excelsior has decided to implement zero discharge for the facility. This report addresses Mesaba One, because the design for Mesaba Two would be substantially identical.

The gasification island of the facility will incorporate a separate zero liquid discharge (ZLD) system. This system will recover and treat wastewater generated from the gasification and slag processing operations that contain

certain levels of heavy metals and other contaminants for the facility feedstocks. This system will recover distilled water for reuse in the power plant, reducing fresh water consumption, and more importantly, concentrate heavy metals and other contaminants of concern into a solid waste stream that will be effectively disposed of in an approved waste management facility.

The project's environmental permit applications were submitted to regulatory authorities in 2006. The above ZLD system serving the gasification island has been included in the permit applications and is not further addressed within this report as it is a separate stand alone system from those described herein.

This report identifies the system for treating the project's non-contact wastewater and stormwater streams. These streams include cooling tower blowdown, smaller flows from water treatment system regeneration, use of service water, and surface runoff streams from the project.

Also addressed is the retention of precipitation (rain and snow) for the IGCC Power Station Footprint not including off-site areas, i.e. railroad, power lines, pump stations, pipelines, etc.

2.3 Overall Water/Wastewater Management

The proposed systems for the site utilize processes that are environmentally sound and are practical approaches to implementing a pollution prevention framework. The general strategy for water retention, recovery and reuse will consist of the following concepts:

- Excelsior will operate non-contact cooling towers for the Air Separation Unit (ASU) and gasification equipment (CT-2) and for the power island portion (CT-1) of the facility with cycles of concentration (COC) of 5 (or more) to minimize the amount of cooling tower blowdown to be handled. The resultant blowdown streams will be directed to an Equalization and Surge Pond.
- Water treatment regeneration wastewaters will be directed to either the

cooling towers as make-up or to the Equalization and Surge Pond as the quality dictates.

- Other non-contact wastewaters are collected and pretreated, if required, prior to entering the Surge and Equalization Pond.
- The water as a result of precipitation will be treated by an oil water separator (if necessary) and then directed into the Surge and Equalization Pond. This water will then be treated, if required, and used as cooling tower makeup or directed into the ZLD system for treatment.

2.4 Assumptions/Requirements

Assumptions/requirements for the design of the systems are indicated below.

1. Reliability and maintainability objectives for the ZLD system are high due to the continuous flows into the system. The ZLD system on-line target is 99% (i.e., less than 7.2 hours per month or ~ one 8 hour shift per month of total downtime).
2. Process area surface drainage will be conveyed by a segregated drain system and then to an Oil Water Separator. Recovered oil will be held in a tank for off-site disposal, underflow will be directed to the Surge and Equalization Pond.
3. Rainfall precipitation design shall be based upon a 100 year – 24 hour storm event of ~5.3” per Technical Paper No. 40. Annual snow fall quantities are not considered as their snow melt volumes will be less than the equivalent of the 5.3” per day rainfall event.
4. The gasification/power production facility can be out of service during the design rainfall without discharge from the site.
5. Leachate collection and monitoring systems for ground water protection will be employed.
6. Equipment redundancy shall be provided throughout the systems.

7. Average raw water flow required for Mesaba One is about 3,360 gpm and the peak raw water flow is about 4,980 gpm for Mesaba One based upon 5 COC for the cooling towers. Raw Water will be from the Canisteo Mine Pit (CMP) with mixing with HAMP (Hill Annex Mine Pit) Complex water.
8. Cooling tower operations are defined as 5 COC based upon initial review of raw water supply with calcium as the limiting specie. If it is determined during final design that higher cycles of concentration can be economically achieved, cooling tower operations and ZLD system equipment sizing will be adjusted accordingly.

3.0 WATER UTILITY GENERAL DESCRIPTIONS

This section provides a general description of the raw water supply and the water retention and recovery and reuse systems.

3.1 Raw Water Supply System

The facility will require significant amounts of water with varying specifications for use in the production of electrical power. The purpose of the raw water supply system is to reliably and cost effectively provide sufficient quantity of water service for the process needs.

Section 3.6.1.1 (Pages 262 - 266) of the MPUC Joint Application discusses the West Range Raw Water System in detail. Table 3.2-2 from the NPDES Permit Application below shows raw water source capabilities for the facility.

Table 3.2-2
Water Source Supply Capability

Water Source	Est. Range of Flow (gpm)	Assumed Sustainable Flow for Water Balance Modeling (gpm)
CMP	810-4,190	2,800
HAMP Complex	1,590-4,030	2,000[a] 3,500[b]
LMP	Not yet quantified	1,800[c]
Prairie River	0-2,470[d]	0[e]
Discharge from IGCC Power Station	0-3,500	Varies

[a]At an operating elevation of 1,230 ft.
[b]At minimum operating elevation
[c]Based on a single observation and flow estimate
[d]Maximum available flow assumed to be 25% of the 7Q10 flow of the Prairie River
[e]For modeling purposes, the Prairie River contributions determined to be unnecessary provided LMP flow rate is sustained a 1,800 gpm.

Mixing in the ratio of 2800 gpm from CMP to 2000 gpm from HAMP Complex for investigation of water quality parameters was used for this report and its calculations.

For Mesaba One, water from the HAMP Complex will be pumped via a pump station to the CMP and from the CMP another pump station will pump the water to the facility. Pump redundancy will be provided within each of these pumping stations.

Figure 3-1 below is a conceptual presentation of the raw water flow case for the average case of 890 gpm to the ZLD system and Figure 3-2 is for the raw water flow case for the peak ZLD case of 1,300 gpm.

Figure 3-1 - Average Raw Water Case

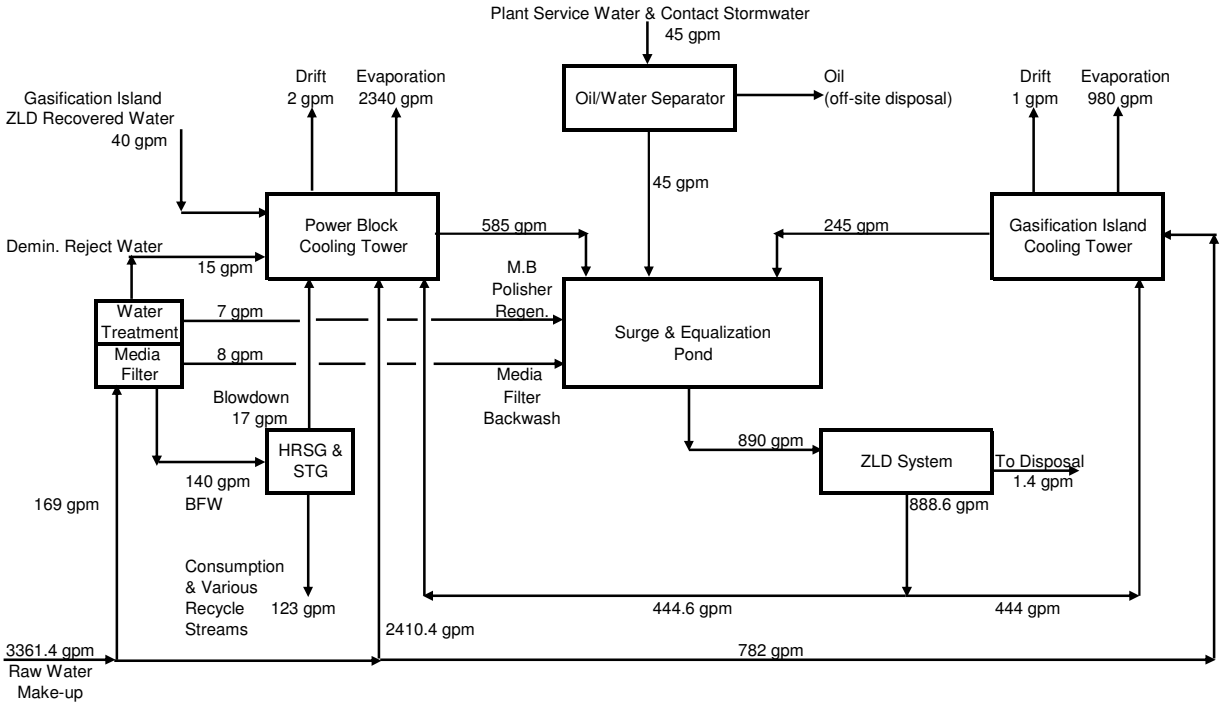

Figure 3-2 - Peak Raw Water Case

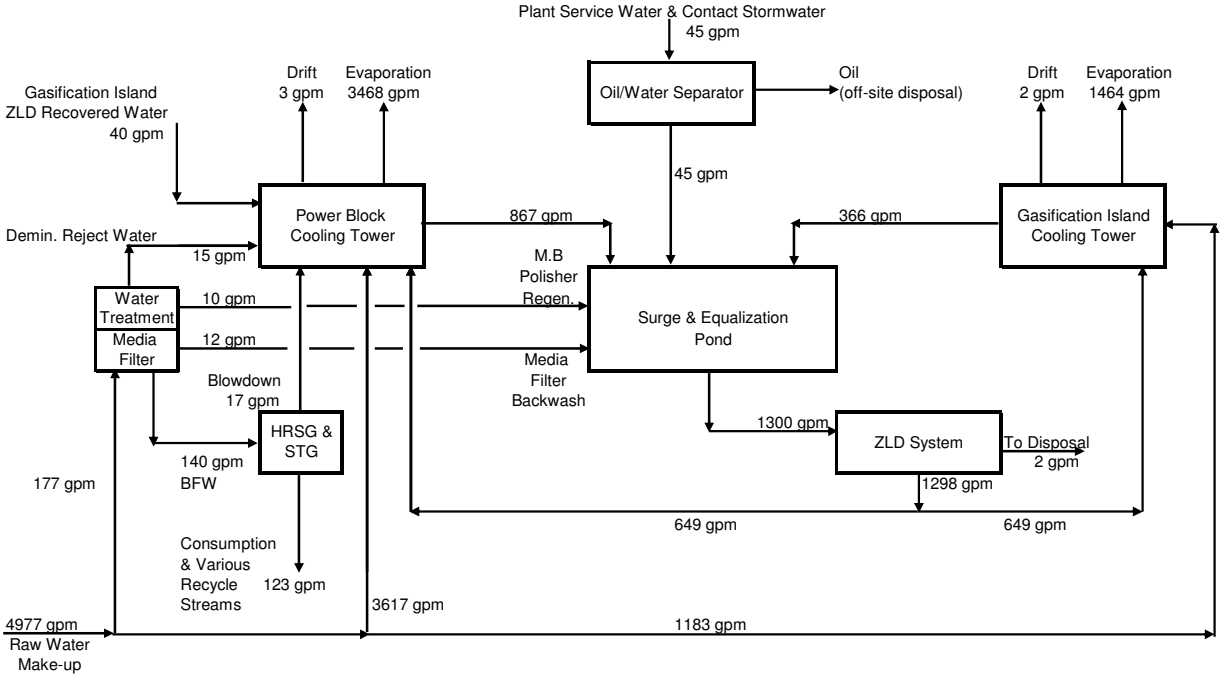

3.2 Raw Water Quality

Water quality from CMP and HAMP Complex were evaluated for ionic balance, i.e., to check their cation and anion characterizations and determine any need to adjust the given analyses before their use alone or with any ratioed chemical values. As the following analytical reviews show: cations appear to exceed anions for CMP water by 8.6% and for HAMP Complex by 5.1%.

Table 3-1 - CMP Water Quality

	As ION	As $CaCO_3$	476		As ION	As $CaCO_3$
CALCIUM	55.3	138.1	pH	ALKALINITY	219.5	180.0
MAGNESIUM	40.8	168.1	8.4	CHLORIDE	5.2	7.3
SODIUM	6.6	14.4	TEMP	SULPHATE	103.5	108.0
POTASSIUM	0.0	0.0	25	NITRATE (as NO_3)	0.0	0.0
		320.6				295.3
TRUE COLOUR	0	Pt/Co (HZ) UNITS		TDS ACTUAL	337	mg/L
TURBIDITY	0.0	NTU				
IRON	0.03	mg/L				
MANGANESE	0.01	mg/L				
CALCULATED RAW WATER PARAMETERS						
SCATIONS/SANIONS	108.6%			TDS CALC'D from "AS IONS"	431	mg/L
HARDNESS	306.2	mg/L, as $CaCO_3$		TDS CALC'D from EC	305	mg/L
ALK/(Cl+SO_4)	1.6			TDS	6.2	meq/L
SO4/(Cl+SO_4)	94%			IONIC STRENGTH: SPECIES	0.01029	mol/L
S MONOVALENT IONS	0.00403	meq/L		IONIC STRENGTH: TDS	0.00862	mol/L
S DIVALENT IONS	0.00827	meq/L		ACIDITY	177.1	mg/L, as $CaCO_3$
SODIUM ADSORPTION RATIO	0.16			(ALK-Ca)	41.9	mg/L, as $CaCO_3$
CORROSIVITY INDICES						
LANGELIER SATURATION INDEX (LSI)	1.03			AGGRESSIVENESS INDEX	13.1	
LARSON INDEX	1.2			[Ca_{SAT}]	120	mg/L, as $CaCO_3$
				CALCIUM CARBONATE PRECIPITATION POTENTIAL (CCPP)	18.1	mg/L, as $CaCO_3$

Table 3-2 - HAMP Complex Water Quality

	As ION	As $CaCO_3$	418		As ION	As $CaCO_3$
CALCIUM	58.6	146.3	pH	ALKALINITY	198.8	163.0
MAGNESIUM	20.5	84.4	8.3	CHLORIDE	5.2	7.3
SODIUM	6.2	13.5	TEMP	SULPHATE	59.5	62.1
POTASSIUM	0.0	0.0	25	NITRATE (as NO_3)	0.0	0.0
		244.2				232.4
TRUE COLOUR	80	Pt/Co (HZ) UNITS		TDS ACTUAL	254	mg/L
TURBIDITY	6.0	NTU				
IRON	0.03	mg/L				
MANGANESE	0.01	mg/L				
CALCULATED RAW WATER PARAMETERS						
SCATIONS/SANIONS	105.1%			TDS CALC'D from "AS IONS"	349	mg/L
HARDNESS	230.8	mg/L, as $CaCO_3$		TDS CALC'D from EC	268	mg/L
ALK/(Cl+SO_4)	2.3			TDS	4.8	meq/L
SO4/(Cl+SO_4)	89%			IONIC STRENGTH: SPECIES	0.00769	mol/L
S MONOVALENT IONS	0.00367	meq/L		IONIC STRENGTH: TDS	0.00698	mol/L
S DIVALENT IONS	0.00585	meq/L		ACIDITY	162.3	mg/L, as $CaCO_3$
SODIUM ADSORPTION RATIO	0.18			(ALK-Ca)	16.7	mg/L, as $CaCO_3$
CORROSIVITY INDICES						
LANGELIER SATURATION INDEX (LSI)	0.93			AGGRESSIVENESS INDEX	12.9	
LARSON INDEX	0.8			[Ca_{SAT}]	120	mg/L, as $CaCO_3$
				CALCIUM CARBONATE PRECIPITATION POTENTIAL (CCPP)	26.3	mg/L, as $CaCO_3$

Refer to **Appendix 1** – Average Raw Water Analysis, for the constituents contained in each of the CMP and HAMP Complex water streams. Also included in **Appendix 1** is an equivalent constituent basis when combining 2,800 gpm of CMP water and 2,000 gpm of HAMP Complex water. This equivalent water is the basis for this report.

3.3 ZLD System

The ZLD system combines wastewater system unit operations as depicted in the conceptual block flow diagram, Figure 3-3. The engineering design challenge is to apply appropriately sized and energy efficient technology in recovering water and removing solids for disposal.

Figure 3-3 –ZLD Conceptual Components

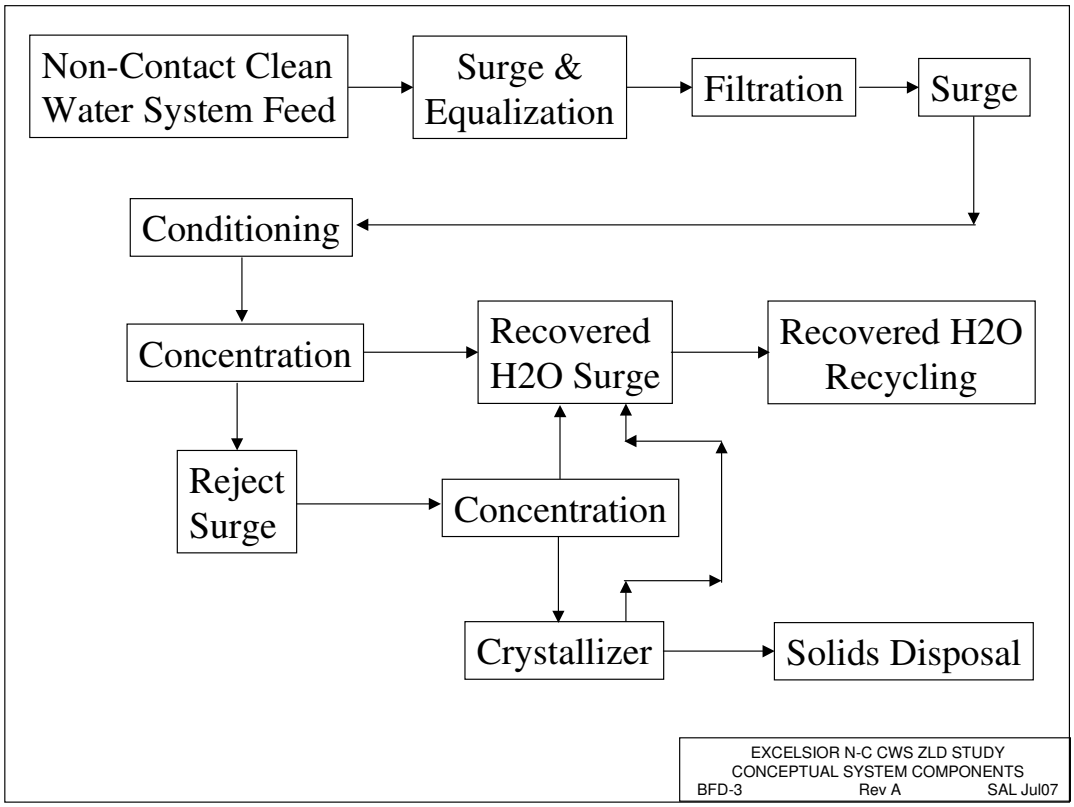

3.4 Wastewater Characterization

ZLD system feeds are qualitatively characterized relative to their Total Dissolved Solids (TDS) and Total Suspended Solids (TSS) levels, which ultimately determine sludge generation rates for off-site disposal. Additional parameters of interest include pH as well as dissolved and free organics. Quantitative values of concentration and flow were established to define the feed to the ZLD system.

The following are the feed streams to the ZLD system:

- Cooling Towers (CT-1 and CT-2) Blowdown - These streams are characterized as having elevated TDS levels due to COC within the cooling tower systems. TSS levels are mitigated by filtered raw water makeup and settling in the cooling tower basin.
- Raw water Multi-Media Pressure Filters Backwash - This stream is characterized as having raw water TDS levels and high TSS levels due to its solids removal from the incoming supply water.
- ZLD Pressure Filters Backwash - This stream is characterized as having generally the level of TDS and TSS from the cooling tower blowdown streams since these are the predominant flows.
- Oil-Water Separator Underflow - This stream is characterized as clarified and filtered raw water with minimal oil and grease content.
- Mixed Bed Polisher Regeneration Flows - This stream is characterized as having high TDS and little to no TSS levels due to regeneration chemical strengths; concentrations are diluted somewhat from rinse and backwash volumes used at the end of the regeneration cycle.
- Storm water and snow melt flows will carry some TSS, but have very low TDS.

3.5 Design Feed to the ZLD System

The annual average ZLD feed stream is 890 gpm and the peak feed is 1,300

gpm per Figures 3-1 and 3-2 of this report. The constituents within both the average and peak feed streams are assumed to be the same, i.e. 1357 mg/l of TDS and 66 mg/l of TSS, as the major contributors are the cooling tower blowdown streams.

Table 3-3 below indicates the estimated properties, TDS, TSS and Total Solids expected for the average inlet flow case for the ZLD and Table 3-4 is for the peak case, both for 5 COC for the cooling towers.

Table 3-3 – Water Retention Recovery and Reuse System - Average Case

	Stream	1	2	3	4	5	6	7	8
Parameter	**Description**	**Power Block Cooling Tower Blowdown (@ 5 COC)**	**Gasifier/ ASU Cooling Tower Blowdown (@ 5 COC)**	**Plant Service Water via O/W Separator**	**Mixed Bed Polisher Regen.**	**Media Filter Bacwash**	**WRRS Feed (1+2+3+4+5)**	**Low TDS Streams (3+5)**	**High TDS Streams (1+2+4)**
Temperature	°F	86	86	76	110	76	85.6	68.3	86.2
Pressure	psig	atm	atm	atm	atm	atm	atm	atm	atm
Mass Flow	lb/hr	294,277	123,244	22,524	3,574	4,004	447,623	26,528	421,095
Density	lb/ft3	62.712	67.712	62.4	63.648	62.4	62.4	62.4	62.4
Specific Gravity	H2O = 1	1.005	1.005	1.000	1.020	1.000	1.000	1.000	1.000
Liquid Volume Flow, Avg.	gpm	585	245	45	7	8	890	53	837
Liquid Volume Flow, Avg.	mgd	0.842	0.353	0.065	0.010	0.012	1.282	0.076	1.205
Liquid Volume Flow, Peak	gpm	867	366	45	10	12	1,300	57	1,243
Liquid Volume Flow, Peak	mgd	1.248	0.527	0.065	0.014	0.017	1.872	0.082	1.790
Total Dissolved Solids	mg/l	1402	1402	200	4000	100	1357	125	1431
Total Suspended Solids	mg/l	50	50	20	10	2000	66	116	50
Total Solids	mg/l	1452	1452	220	4010	2100	1423	241	1481
Total Dissolved Solids	lb/hr	410.6	172.0	4.5	14.0	0.4	604.7	3.3	599.7
Total Suspended Solids	lb/hr	14.6	6.1	0.5	0.0	8.0	29.4	3.1	21.0
Total Solids	lb/hr	425.3	178.1	5.0	14.1	8.4	634.1	6.4	620.6
Total Dissolved Solids	lb/day	9,855.3	4,127.4	108.1	336.5	9.6	14,512.3	79.6	14,392.3
Total Suspended Solids	lb/day	351.5	147.2	10.8	0.9	192.3	705.8	73.9	502.9
Total Solids	lb/day	10,206.7	4,274.6	119	337.4	201.9	15,218.1	153.5	14,895.2
Total Dissolved Solids	ton/day	4.928	2.064	0.054	0.168	0.005	7.256	0.040	7.196
Total Suspended Solids	ton/day	0.176	0.074	0.005	0.000	0.096	0.353	0.037	0.251
Total Solids	ton/day	5.103	2.137	0.059	0.169	0.101	7.609	0.077	7.448

Table 3-4 - Water Retention Recovery and Reuse System - Peak Case

	Stream	1	2	3	4	5	6	7	8
Parameter	**Description**	**Power Block Cooling Tower Blowdown (@ 5 COC)**	**Gasifier/ ASU Cooling Tower Blowdown (@ 5 COC)**	**Plant Service Water via O/W Separator**	**Mixed Bed Polisher Regen.**	**Media Filter Bacwash**	**WRRS Feed (1+2+3+4+5)**	**Low TDS Streams (3+5)**	**High TDS Streams (1+2+4)**
Temperature	°F	86	86	76	110	76	85.6	68.3	86.2
Pressure	psig	atm	atm	atm	atm	atm	atm	atm	atm
Mass Flow	lb/hr	294,277	123,244	22,524	3,574	4,004	447,623	26,528	421,095
Density	lb/ft3	62.712	67.712	62.4	63.648	62.4	62.4	62.4	62.4
Specific Gravity	H2O = 1	1.005	1.005	1.000	1.020	1.000	1.000	1.000	1.000
Liquid Volume Flow, Peak	gpm	867	366	45	10	12	1,300	57	1,243
Liquid Volume Flow, Peak	mgd	1.248	0.527	0.065	0.014	0.017	1.872	0.082	1.790
Total Dissolved Solids	mg/l	1402	1402	200	4000	100	1357	125	1431
Total Suspended Solids	mg/l	50	50	20	10	2000	66	116	50
Total Solids	mg/l	1452	1452	220	4010	2100	1423	241	1481
Total Dissolved Solids	lb/hr	608.6	256.9	4.5	20.0	0.6	883.2	3.6	890.6
Total Suspended Solids	lb/hr	21.7	9.2	0.5	0.1	12.0	43.0	3.3	31.1
Total Solids	lb/hr	630.3	266.1	5.0	20.1	12.6	926.2	6.9	921.7
Total Dissolved Solids	lb/day	14,606.0	6,165.9	108.1	480.6	14.4	21,197.7	85.6	21,373.5
Total Suspended Solids	lb/day	520.9	219.9	10.8	0.9	288.4	1031.0	79.5	746.8
Total Solids	lb/day	15,126.9	6,385.8	119	481.5	302.8	22,228.7	165.1	22,120.3
Total Dissolved Solids	ton/day	7.303	3.083	0.054	0.240	0.007	10.599	0.043	10.687
Total Suspended Solids	ton/day	0.260	0.110	0.005	0.000	0.144	0.515	0.040	0.373
Total Solids	ton/day	7.563	3.193	0.059	0.241	0.151	11.114	0.083	11.060

4.0 DETAILED PROCESS DESCRIPTIONS

The following are detailed descriptions of the water retention, recovery and reuse systems.

4.1 Precipitation Retention and Recovery System

Based upon the design rainfall of 5.3 inches/day, the average rainfall is 2.25gpm/1,000 square feet of plot area. Areas that are paved will have a runoff coefficient of 1.0 (all water to retention). Other areas that are not paved will have runoff coefficients of less than 1.0 depending upon the type of surface covering. Calculations show that this rainfall event would result in 30.8 acre-feet of runoff for Mesaba One and 33.6 acre-feet of runoff for Mesaba Two. (Mesaba Two's drainage area is slightly larger due to differences in site grading.)

Equipment areas such as cooling towers will retain the rainfall and will not contribute to the calculations of retention.

Runoff from rainfall and snow melt will be collected in the Surge and Equalization Pond located in the flare area and stored while the water is being recovered and recycled within the facility. The design shows that a pond capacity of 35 acre-feet could be achieved in this location. This capacity is very conservative, as it is more than adequate to accommodate a 24-hr, 100-yr storm event that coincides with a plant outage. During normal plant operation, capacity requirements would be reduced by the cooling towers' ability to work off accumulated runoff.

The collected water will be pumped to the cooling tower basins as makeup over time or, should it for some reason require treatment, be directed into the ZLD system.

The water will be transferred from the Surge and Equalization Pond to the cooling towers via pump(s).

4.2 ZLD System

Figure 4-1 below is a block diagram representation of the ZLD system.

Figure 4-1 - ZLD System Schematic

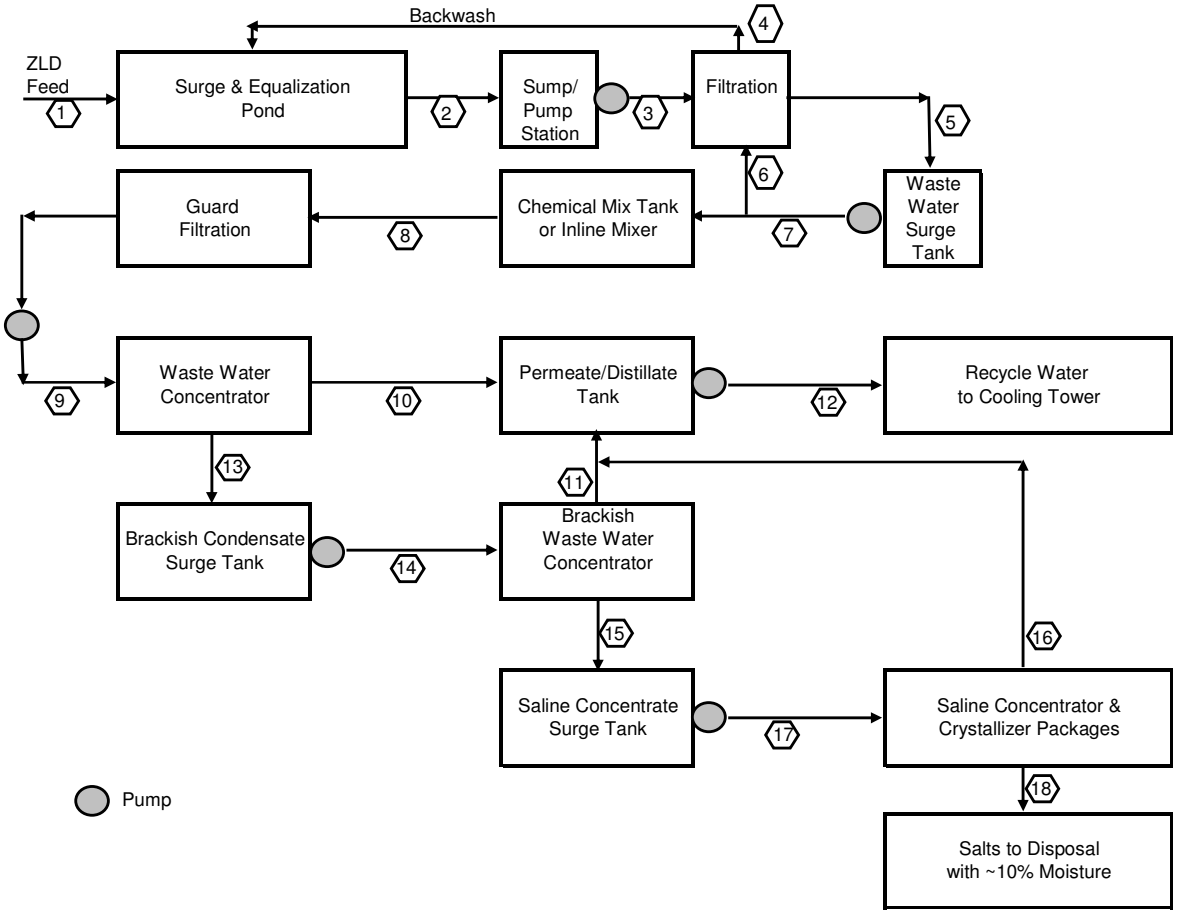

Table 4-1 below indicates the flows and estimated TDS levels at key points (noted in Figure 4-1 above) throughout the ZLD System.

Table 4-1 - ZLD Stream Table

Stream No.	1	2	3	4	5	6	7	8	9	10	11	12	13	14	15	16	17	18
Average Case	890	890	890	0	890	0	890	890	890	668	166	888.6	222	222	56	54.6	56	1.4
Peak Case	1,300	1,300	1,300	0	1,300	0	1,300	1,300	1,300	975	244	1,298	325	325	81	79	81	2
Approximate TDS	1,357	1,357	1,357	0	1,357	0	1,357	1,357	1,357	2	73	33	5,423	5,423	21,473	288	21,473	840,410

All of the ZLD feeds will be directed to the Surge and Equalization Pond. Surge and equalization capacity is required to enable system maintenance to be accomplished and to handle intermittent surges of water to regain operational control or balance concentrations in the chemical treatment programs. Accommodation of variable stream compositions and diluting effects from storm water inputs is also a process need to allow downstream systems to operate in an approach to steady state conditions. These needs would be met by the pond described in **Section 4.1** and do not increase the capacity requirements for that pond. A pond would be double lined storage with leak detection and leachate collection. A divided capacity pond system will be provided such that one side can be cleaned of solids from the feed and the backwash from filtration. The second half of the pond would continue to operate during these times.

Settled solids would be removed from the pond on a periodic basis and disposed of off-site at an approved disposal facility.

A common sump with isolation from either side of the pond would be provided with pumps to transfer the feed into the ZLD system or directly to the cooling towers as makeup.

ZLD inlet filtration is required to limit TSS in downstream equipment, especially membrane based systems with extremely small pore diameters. Anthracite coal or activated carbon is typically used as filter media, which allow backwashing and low attrition as well as protection from trace incoming organic compounds.

Backwash for the filters is directed back to the Surge and Equalization Pond where suspended solids will settle out and water is then recycled to the ZLD system.

After passing through the filters the filtered wastewater is directed to a Surge Tank which provides capacity to allow short-term downstream equipment

maintenance activities and as a reservoir for backwash water for the filtration equipment.

Pumps take suction from the Surge Tank and pump it through conditioning equipment. Conditioning is a generic term for pH adjustment, anti-scale addition and fine filtering (guard filtration) used in front of wastewater concentrator membrane systems.

After passing through the conditioning equipment pumps increase the wastewater's pressure before entering the first stage of wastewater concentration.

Concentration is a generic term used for describing physical and molecular separation of solids from wastewater. Modern membrane based systems such as reverse osmosis (RO) and electrodialysis reversal (EDR) act as molecular/ion filters under high to medium pressures, respectively. Concerns with membrane fouling, scaling, and blinding require the upstream conditioning identified above. These conditioning needs and other special design items are what ultimately control the efficiency of water recovery.

Concentrator reject waters typically vary from 10-50% of concentrator feed flow, depending on operating pressures and membrane conditions. Brackish Concentrate Surge Tank capacity is provided after the first concentrator to allow short-term downstream equipment maintenance activities and as a reservoir for backwashing concentration equipment with or without cleaning chemical addition.

Recovered water (permeate) from the concentrator is directed into a Permeate/Distillate Tank from which it is pumped back to the recycle water users.

High pressure pumps take suction from the Brackish Concentrate Surge Tank and pass it through a second concentrator for further water recovery.

Recovered water is again directed into the Permeate/Distillate Tank while rejected water is directed into a Saline Concentrate Surge Tank.

From the Saline Concentrate Surge Tank the concentrated wastewater is pumped to the Saline Concentrator and Crystallizer equipment.

A mechanical vapor recompression (MVR) type evaporator, which can use 15-20 times less energy, was selected over a simple cycle evaporator. The MVR evaporator efficiency is accomplished by employing electrical energy to drive a compressor to boost the pressure of steam from the evaporator, so that it can be condensed against recirculated feed and provide the driving energy for the system after initial startup on imported steam. Refer to Figure 4-2 for a generic MVR design.

Figure 4-2

Basic Mechanical Vapor Compression Evaporator Model

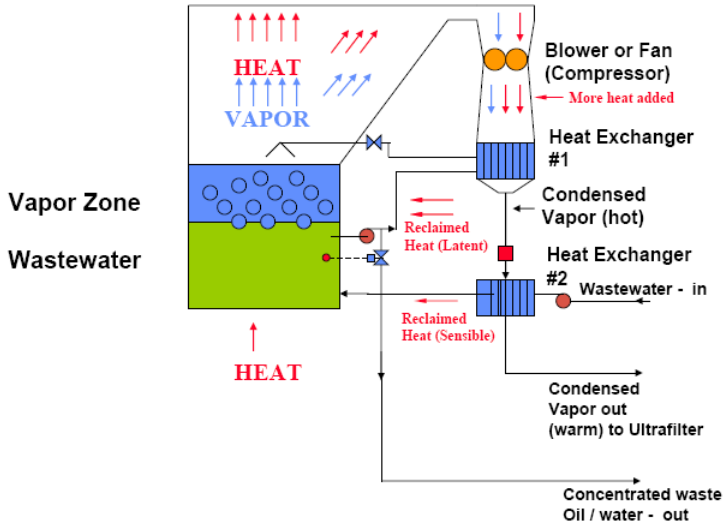

The high levels of dissolved solids entering an evaporator act to increase the boiling point well beyond that of pure water. For instance, seawater with a TDS of approximately 30,000 mg/l exhibits a boiling point elevation of less than 1°F. While saturated sodium chloride at 360,000 mg/l has a boiling point elevation of about 13°F. This boiling point elevation represents a challenge for vapor-compression evaporation in that it increases the pressure ratio that the steam compressor must attain to effect vaporization. Since boiling point elevation determines the pressure ratio in the compressor, it is the main overall factor in operating costs.

Crystallizer operations are tightly linked with the pre-crystallizer concentrator as the high solids concentration feed is taken to its saturation point, creating a "mother liquor" from which solids are precipitated and removed via a centrifuge or other separation or filtration device. Control of the mother liquor concentration is critical to producing a manageable amount of suspended salt crystals and separating them on a routine basis. The controlled continued evaporation of water drives recovery rates, thus steady state operations are highly desirable. The solids disposal objective is production of a 10% moisture content paste, suitable for off-site landfill disposal in an approved facility. Recovered water from the Saline Concentrator and Crystallizer equipment is returned to the Permeate/Distillate Tank.

4.3 System Redundancy and Capacity Requirements

The systems will be able to meet the criteria of processing the required quantity of wastewaters anticipated. Below is the preliminary philosophy to accomplish this.

Pumps throughout the systems including for chemical feed will have spares installed. During detailed engineering arrangements such as 2 – 100%, 3 – 50%,

4 – 33%, etc. will be employed. Tanks in the systems will not have any redundancy.

The Surge and Equalization Pond for each phase will be a single pond which will be divided into two areas such that cleaning of solids can occur in one side while the other is in use. Should an event occur and the complete capacity is required an overflow to the isolated area will be provided such that no water is discharged from the site.

A common sump with pumps installed will be provided with the capability of isolating each side of the pond from the sump. Pumps with redundancy will be provided to transfer the water to the cooling towers or the ZLD system as required.

The pumps in the sump will provide the necessary pressure to pass the water through the ZLD inlet filters. These filters are normally very reliable and an arrangement where the number of filters that are required to process the wastewater during peak period flows will be provided. During backwashing of the filters the surge capacity of the Surge and Equalization Pond will be used until the backwash unit is returned to service.

The guard filters prior to the wastewater concentrator will have a spare filter such that cleaning of one can occur while the system is processing the full throughput.

The concentrators are membrane stacks of multiple vessels. The number of stacks to be provided will be developed during detailed engineering but the sparing philosophy will be that the throughput can be processed while a unit is in its regeneration and/or cleaning mode.

Spare capacity will be built into the ZLD system, but if for some reason a component within the system cannot process the required throughput, the flow through the system will backup into the preceding process storage unit and back

through the system until ultimately the Surge & Equalization Pond capacity would be used. For example (see Figure 4-1), if a unit in the Waste Water Concentrator could not process the output from the Guard Filtration system, flow through the Guard Filtration system would be reduced accordingly by controlling the pumps at the outlet of the Waste Water Surge Tank. Once the high level in the Waste Water Surge Tank was reached, one or more of the Sump Pumps taking suction from the Surge & Equalization Pond would shutdown and the level in the pond would begin to rise. After the portion of the system that was not able to process the required throughput returned to service this wastewater in the pond would then be processed through the system over time to return the pond to normal operating level.

As described in **Section 4.1**, the capacity of the Surge and Equalization Pond was determined by the worst-case conditions, i.e., the 24-hr, 100-yr storm during a plant outage. Flow backups caused by partial or complete outages of the ZLD system would not increase the capacity required for the Surge and Equalization Pond. This is because such backups would only occur during plant operation, when the rainfall could be worked off by evaporation from the cooling towers at a rate as high as 3-5,000 gpm, while flow backups from the ZLD system could not exceed 1,300 gpm.

Outside of significant precipitation events, the Surge and Equalization Pond theoretically has capacity to store peak ZLD treatment flows (of 1,300 gpm) for six days. Most of that capacity would be reserved in case a precipitation event did occur, but due to the large size of the pond and the high availability provided by redundant design of the ZLD system, it would be extremely rare that the power plant would need to shut down due to a complete outage of the ZLD system.

4.4 Waste Streams Generated

The waste streams that would be generated as a result of the systems are as

follows:

- Solids that would settle out in the cooling tower basins which are periodically cleaned out.
- Solids sludge that would settle out in the Surge and Equalization Pond which are periodically cleaned out.
- Salts generated by the Saline Concentrator and Crystallizer equipment which would contain approximately 10% moisture.

These streams would be transported off-site for disposal in approved facilities. All trace elements that are in the feed to the ZLD system would be retained in the above streams.

The only vent to the atmosphere would be a small moisture vent from the Saline Concentrator and Crystallizer equipment.

4.5 Future Considerations

During the detailed design of the facility further analysis of the water usages and discharges to the ZLD systems within the plant will be undertaken. The ultimate end product of these analyses is to reduce the inlet raw water demands economically.

One primary area where this will be addressed is the COC for the facility's cooling towers. Should higher COC occur, lower raw water needs and lower feed to the ZLD would result.

As noted in Appendix H of the DOE/EIS-0382D Draft Environmental Impact Statement, cooling tower particulate matter emissions from cooling tower drift will increase as the COC at which the cooling towers operate increases. These potentially additional emissions are not addressed further in the report.

5.0 REFERENCES

The following references were used in preparation of this report.

- Application to the Minnesota Pollution Control Agency for a National Pollution Discharge Elimination System Permit, dated June 18, 2006
- Joint Application to the Minnesota Public Utilities Commission for the following Pre-Construction Permits: Large Electric Generating Plant Site Permit, High Voltage Transmission Line Route Permit and Natural Gas Pipeline Routing Permit, dated June 16, 2006
- US DOE Clean Coal Power Initiative Round 2, Project 342 Fact Sheet, 12/06
- MPCA Design Flow and Loading Determination Guidelines for Wastewater Treatment Plants, Water/Wastewater Technical Review and Guidance/#5.20, February 2002
- Issue Paper “B”, Precipitation Frequency Analysis And Use, January 6, 2005, To: Minnesota Stormwater Manual Sub-Committee, From: Emmons & Oliver Resources and Center for Watershed Protection
- Technical Paper No. 40, Rainfall Frequency Atlas of the United States for Durations from 30 Minutes to 24 Hours and Return Periods from 1 to 100 years

APPENDIX 1 – Average Raw Water Analyses

Raw Water Analysis and Future Mix

		gpm Mix % Mix	2800 58% CMP	2000 42% HAMP	<DL	Equiv.
Aluminum	mg/L		0.0125	0.0125	1/2	0.013
Antimony	mg/L					0.000
Arsenic	mg/L					0.000
Barium	mg/L		0.028	0.0297		0.029
Beryllium	mg/L					0.000
Cadmium	mg/L		0.005	0.005	1/2	0.005
Calcium	mg/L		55.3	58.6		56.7
Chromium, total	mg/L		0.005	0.005	hex	0.005
Copper	mg/L		0.005	0.005	1/2	0.005
Iron	mg/L		0.025	0.025	1/2	0.025
Lead	mg/L					0.000
Magnesium	mg/L		40.8	20.5		32.3
Manganese	mg/L		0.01	0.01	1/2	0.010
Mercury	mg/L		9E-07	9E-07		0.000
Nickel	mg/L		0.0025	0.0025	1/2	0.003
Potassium	mg/L					0.000
Selenium	mg/L		0.001	0.001	1/2	0.001
Silver	mg/L					0.000
Sodium	mg/L		6.6	6.2		6.4
Strontium	mg/L					0.000
Zinc	mg/L		0.005	0.005	1/2	0.005
INORGANICS						
Alkalinity-Bicarbonate	mg/L					0.000
Alkalinity-Carbonate	mg/L					0.000
Carbon Dioxide (aq)	mg/L					0.000
Chloride	mg/L		5.15	5.2		5.2
Cyanide, free	mg/L					0.000
Fluoride	mg/L					0.000
Nitrate (as N)	mg/L					0.000
o-Phosphate	mg/L					0.000
Sulfate	mg/L		103.5	59.5		85.2
Silica	mg/L					0.000
pH	pH		8.4	8.3		8.358
Solids (TS)	mg/L					0.000
Total Suspended Solids:	mg/L					0.000
BULK PROPERTIES						
Hardness as CACO3			308	229		275.083
Alkalinity			180	163		172.917
TDS			337	254		302.417
Sp. Conductivity	umhos/cm		476	418		451.833
BOD			1	1	1/2	1.000
COD			1	1	1/2	1.000
TOC			1.9	1.9		1.900
TSS			1.5	1.5		1.500
NH3-N			0.05	0.05	1/2	0.050
P, T			0.05	0.05	1/2	0.050