Energy Conservation Potential at Minnesota Data Centers

Identifying the Opportunity

Conservation Applied Research & Development (CARD)

FINAL REPORT

Prepared for: Minnesota Department of Commerce, Division of Energy Resources

Prepared by: Minnesota Technical Assistance Program

COMM-03192012-53916 | NOVEMBER 2014

Prepared by:

Jon Vanyo
Robert Lundquist
Laura Babcock

Minnesota Technical Assistance Program
200 Oak St SE St 350
Minneapolis, MN 55455
612-624-1300
www.mntap.umn.edu

Contract Number: 53916

Prepared for Minnesota Department of Commerce, Division of Energy Resources

Mike Rothman, Commissioner, Department of Commerce

Bill Grant, Deputy Commissioner, Department of Commerce, Division of Energy Resources

Mary Sue Lobenstein, Project Manager
651-539-1872
Marysue.lobenstein@state.mn.us

ACKNOWLEGEMENTS

This project was supported in part (or in whole) by a grant from the Minnesota Department of Commerce, Division of Energy Resources through the Conservation Applied Research and Development (CARD) program, which is funded by Minnesota ratepayers.

DISCLAIMER

This report does not necessarily represent the view(s), opinion(s), or position(s) of the Minnesota Department of Commerce (Commerce), its employees or the State of Minnesota (State). When applicable, the State will evaluate the results of this research for inclusion in Conservation Improvement Program (CIP) portfolios and communicate its recommendations in separate document(s).

Commerce, the State, its employees, contractors, subcontractors, project participants, the organizations listed herein, or any person on behalf of any of the organizations mentioned herein make no warranty, express or implied, with respect to the use of any information, apparatus, method, or process disclosed in this document. Furthermore, the aforementioned parties assume no liability for the information in this report with respect to the use of, or damages resulting from the use of, any information, apparatus, method, or process disclosed in this document; nor does any party represent that the use of this information will not infringe upon privately owned rights.

Abstract

This report provides an overview of energy efficiency opportunities and challenges at data centers in the state of Minnesota. As part of this project, the Minnesota Technical Assistance Program (MnTAP) launched an effort to study the energy efficiency of the state's data centers, and visited twelve sites to assess the sector's range of operations. A review of literature and websites about energy efficiency and benchmarks was completed. The information gathered includes the opportunities for implementing energy efficiency techniques, the barriers to implementation, and possible ways to overcome these barriers. It was found that electrical consumption of data centers is generally difficult to obtain because most data centers are not currently recording their data center energy usage. This is less of an issue in large, stand-alone data centers that are not part of a larger or more diverse organization because energy is recognized as a significant part of their operating costs. These facilities are more likely to track energy use and have the staff, resources, and priority to address energy efficiency. In contrast, smaller data centers are often viewed as a support function, and not a main cost center. This creates the perception that these data centers do not use a significant amount of electricity compared to the organization as a whole. This leads to smaller companies concluding that data center efficiency is not worth their organizations time. In truth, IT has been reported by Brandon in *Saving Energy by the Server Room* to consume up to 30 – 40 percent of the power flowing into a typical corporation. There are numerous technical solutions to improving data center energy efficiency that are readily available in literature and from other sources, so the issue is more about developing the awareness, education, and management priorities, and not the lack of available technology. Electrical utility Conservation Improvement Programs (CIPs) should focus on organizations with embedded data centers in order to help determine the magnitude of the problem and the opportunities for the implementation of energy efficient technologies and procedures.

Table of Contents

Abstract i

Executive Summary 1

Data Center Classification 1

Energy Efficiency Opportunities 1

Barriers to Energy Efficiency 2

Minnesota Data Center Profile 2

Utility Programs 3

Section 1: Background and Approach 4

Section 2: Data Center Identification and Characterization 5

Data Centers in Minnesota 6

Data Center Power Consumption and Rebate Data 6

Data Center Classification 6

Classification of Data Centers by Function 7

Classification of Data Centers by Size 8

Classification of Data Centers by Tier 10

Classification of Minnesota Data Centers 11

Section 3: Data Center Site Visits 14

Visit Procedure 16

Results (Observations) 16

Section 4: Resources and Tools for Data Centers 17

Government Agencies 17

Industry Organizations 17

Tools, Calculators, Best Operating Practices 18

Rebate Information 19

Section 5: Research Energy Conservation Technologies and Measures 20

Environmental 22

Electronic 24

Electrical 24

Educational 27

Elimination 27

Matrix of Energy Conservation Opportunities vs. Data Center Types 27

Section 6: Benchmarking 28

Overview of Major Tools Available 28

Benchmarking is Part of a Process 31

Key Challenges in Applying Benchmark Tools 32

Other Benchmarks 34

Section 7: Key Data Center Challenges 34

Lack of Power Consumption Data 35

Split Incentives 35

Reluctance to Change 35

Section 8: Conclusion 36

Bibliography 38

Appendix A: Data Gathering Form for Server Room 43

Appendix B: IBM Benchmarking Results of 2 MN 44

Facility 1 44

Facility 2 49

Executive Summary

The internet and its functions have been growing without interruption for decades. People and organizations continue to think of new ways to transmit and use information which contributes to rapid and wide spread internet growth. This activity drives the growth of data centers which house the servers that sort, analyze, store, archive, and otherwise manipulate data and information that keeps the internet and other knowledge systems functioning. The intent of this study has been to determine how much electricity Minnesota data centers consume, identify sector energy efficiency opportunities and explore efficiency implementation barriers and how they might be overcome. An output of this study is to propose how utility conservation improvement programs can assist data centers in standardizing their efforts to benchmark and implement energy efficiency measures.

Data Center Classification

There do not appear to be absolute standards for how data centers are classified. They have been sorted by size, ownership, function and tier in this study. Classifications by size are based mainly on the data centers' physical floor area. The general sizing classifications used for data centers start with server closets (<200 ft^2), then server rooms (200 – 500 ft^2, then "localized" or "mid-tier" (500 – 5000 ft^2), and finally enterprise or utility scale (>5,000 ft^2). Another classification for data centers is whether they are public or private, specifically, does the facility service the public at large or only the organization's internal purposes. The public-private difference does not have much impact on energy efficiency options. A much more important difference for energy efficiency is whether a data center offers the entire range of data services to its clients, or whether they rent space and infrastructure to its clients, who in turn operate and maintain their own equipment and software. Three types of service classifications cover most facilities:

- Co-location facilities (co-los) lease space to their clients who install their own equipment
- Service providers host computing and managed services to off-site users
- Mixed use facilities provide both physical infrastructure rental and managed services

None of the classification schemes use power consumption or power density as a basis for classifying data centers. The U.S. Environmental Protection Agency's ENERGY STAR Program does not consider an organization to be a data center unless its floor area is at least 50% of the total area of the facility. For the purposes of this work, a data center was defined more broadly. A facility is considered a data center whether it called itself a data center, or simply has a collection of electronic equipment on site called a "data center".

Energy Efficiency Opportunities

Energy efficient technologies for data centers can be put into one of five categories: Environmental, Electrical, Electronic, Education, and Elimination; collectively known as the five "E's."

- Environmental includes air flow, temperature, and humidity
- Electrical is the infrastructure that provides power and lighting
- Electronic includes consolidation, virtualization, and energy efficient equipment
- Education is informing clients how they can contribute to a data center's efficiency
- Elimination is migrating data center operations to an external service provider

For data centers that have site energy use information, benchmark tools can be used to track their history of implementation or to compare themselves to other organizations in the industry. These benchmarks vary in the amount of quantitative and qualitative information they use. A summary of the major tools has been compiled to give some guidance on which benchmarks may be useful under certain conditions.

Barriers to Energy Efficiency

There are numerous technical solutions to improving data center energy efficiency that are readily available in the literature and from other sources, so the issue is more about developing the awareness, education, and management priorities, not the lack of available technology. These barriers relate overwhelmingly to the private embedded data centers and fall into three categories:

- Lack of information about power demand and energy use
- Priority differences between overall facility management and data center management
- Inertia within organizations

The most significant barrier may be the lack of knowledge of how much power the data center demands and how much energy it consumes relative to the whole enterprise. Retrofitting a building's infrastructure to accommodate a data center may make it much more difficult to measure incoming power to the data center components due to lack of submetering. Without direct measurement, site managers do not know how much energy the data center consumes compared to the rest of the facility, in spite of the fact that data centers are much more power intensive than typical building spaces. In addition to the lack of awareness of data center energy use, there may be conflicting priorities or lack of information sharing between the overall facility manager and the data center manager. Misunderstandings or split incentives may mean these managers are working independently of each other, or even against each other, toward the overall energy efficiency of a site.

Minnesota Data Center Profile

A list of data centers in Minnesota was compiled using Dun & Bradstreet's Million Dollar Directory (MDD). A total of 4,031 potential data center facilities were identified in this manner. In this study, facilities with a NAICS code of 518 (data processing, hosting, and related services) are considered to be data centers. There are 395 of these data centers in Minnesota. Additionally, any facility with 10 million dollars of total sales has been assumed to have a data center. This accounts for 3438 of the potential Minnesota data centers identified. Finally, facilities with NAICS code 611310 (universities) also are considered to contain data centers. There were 198 of these facilities found in Minnesota.

Twelve Minnesota data centers were visited as part of this work: one in Duluth, one in Owatonna, and ten in the Minneapolis/St. Paul area. These sites ranged from large to the very small area-wise, and included sites that only rent space to their clients, and those that rent and provide internet services. Visits lasted one to two hours. Four of the visits were to enterprise or utility scale facilities that measured power consumption and efficiency. The other eight data centers were located within a larger business operating site. Staff at these eight sites knew about their options for energy efficiency, however, they did not measure the energy consumption of their data centers and could not estimate if it was worthwhile to pursue energy conservation opportunities.

It was found that energy efficient opportunities are best determined by considering a more holistic approach to data center types and functions as well as size. In general, the larger and more functionally varied data centers will have more options to consider, as well as the resources and electrical consumption levels to justify implementation of energy efficient concepts and equipment.

Utility Programs

The data center sector is part of the electric utilities' overall commercial building Conservation Improvement Programs (CIPs). As such, there is little direct focus on the unique energy conservation needs of data centers relative to a typical commercial building. Given the number, growth, and power density of data centers, more targeted focus may be justified to demonstrate the opportunity for state energy conservation available through data center energy management. An increased understanding of data center contribution to site energy consumption may motivate companies to adopt conservation measures. The following recommendations would help utilities identify data center energy efficiency opportunity in their territories and inform clients on the potential savings that could be obtained by adopting best practices.

To increase awareness of data center energy consumption and motivate client adoption of energy efficiency practices, utilities could:

- Develop a statewide list of clients that have a data center or components typically found in a data center. This will illustrate how many companies could be impacted by a targeted program.
- Institute an equipment loan service to measure data center energy consumption and engineering support to use it. This would act as an incentive for organizations with data centers to become more aware of problems that relate to electrical consumption.
- Share information on best practices and services to support overall improvement in the state. Wisconsin's Focus on Energy consortium may serve as a model that could be adopted in Minnesota.
- Offer energy audits and measurement tools to data centers, while educating data center personnel of their best improvement options and the incentives and payback periods associated with the efficiency opportunities.

The power density and growth of data centers of all kinds is a good reason for utilities to increase their focus on providing assistance and programs directed to this sector to help motivate conservation. The larger, public data centers may serve as good models for effective energy efficiency measures and best practices.

Section 1: Background and Approach

Electronic data collection, processing, and storage has been growing at a very fast rate due to society's desire to analyze large data sets, communicate more frequently with instantaneous messaging, participate in social networking, procure goods and services through internet sales, and many other activities. This has required a corresponding growth in energy consumption at public and private data centers to support these activities. In *Internet Infrastructure*, Koomey estimated that data centers in the United States consume about 2% of total energy use and that energy use in data centers has grown by at least 50% since 2005. Bibliography This translates to 1.35 billion kWh for the state of Minnesota (Minnesota Electricity Profile 2012). The United States government has recognized this growth in energy consumption and is concerned about it. The Environmental Protection Agency (EPA) and the Department of Energy (DOE) have been assigned the task of monitoring and analyzing the situation in order to help data centers optimize their energy use. At the state level, the Minnesota legislature passed the Next Generation Energy Act of 2007 to establish the Conservation Improvement Program (CIP) and set goals for overall energy efficiency for utilities to achieve. Data centers represent a source of energy efficiency and savings that utilities can pursue to meet these goals. This research will help identify strategies that can be used to address this sector.

A significant amount of research has been done to identify energy efficiency opportunities and to develop highly efficient equipment options for data centers and this work is ongoing. Numerous agencies such as the EPA, national laboratories, educational institutes, trade associations, hardware manufacturers, software companies, consultants and even large independent data centers have a role in this development. In addition, there are many organizations, both public and private, that support the distribution and use of this information and these new technologies. As a result, a great deal of information is available on ways to improve the energy efficiency of data centers. Because there is so much information, a data center manager may not be in a position to easily identify or interpret the best solutions for their facility in order to improve energy conservation. There are many unknowns related to energy use in Minnesota data centers. This project was developed to address the following topics.

- How aware data center managers are of the available energy efficiency opportunities
- How much energy data centers located in Minnesota consume
- Do data center managers realize the impact improving the efficiency of their data center could have on their organization's budget
- Are Minnesota utilities fully aware of data center operations and energy consumption across the state and in their territories
- Do CIP program managers have relevant information on options for improving the energy efficiency of data centers
- Will a focus on improving the energy efficiency in Minnesota data centers contribute significantly to utilities meeting their State energy savings goals

In order to pursue the answers to these questions, we have conducted a market sector analysis for data centers in Minnesota consisting of:

- Identifying and characterizing data centers in the state, including how data centers are defined, how they can be classified and how many data centers by class there are in Minnesota
- Performing site visits at a selected number of Minnesota data centers to assess specific energy savings opportunities, to gauge staff awareness of these opportunities, and, when possible, to analyze data center energy consumption
- Pinpointing appropriate resources and tools for data centers of various size and configuration

- Determining relevant energy efficient technologies and best practice strategies for data centers
- Identifying state appropriate standards or benchmarks for data center efficiency
- Identifying barriers to implementing energy efficiency opportunities in data centers
- Determining how Minnesota electric utilities are currently involved in addressing energy efficiency in data centers as well as identifying additional ways for utilities to assist data centers to overcome barriers to adoption of efficiency projects

The methods used for conducting this market sector analysis consisted of a thorough literature review, conversations with data center operators, utility staff, and industry experts, evaluation of the compiled list of Minnesota data centers, and data collected during site visits.

The literature search and review was accomplished using the internet and the University of Minnesota's library system. There are large amounts of information related to data centers and energy efficiency on the internet, but comparatively little in the academic literature, which tended to be highly specialized. Literature around this topic has been published over the past ten years. A significant increase in citations has been seen since 2009 indicating an increase in research around this topic and an increase in fundamental knowledge being generated. Government agencies, especially the U.S. Environmental Protection Agency (EPA) and the U.S. Department of Energy (DOE), industry organizations, and vendors are the main sources of data and information. Information on utilities' websites tended to focus on the rebate process. Trade journal articles and blog posts are additional sources of publication of information on this topic. Topics vary over a wide range and they tend to be sources of anecdotal information, planned events and conferences, solicitations, and lessons learned among others. In addition, organizations such as Google, Facebook, and others with a large presence on the internet share their stories on how they have become more energy efficient.

The bibliography lists the specific materials that were found and reviewed as a result of the literature and web searches, and results of these searches are summarized in various sections of this report, including Section 2: Data Center Identification and Characterization covering the identification and classification of data centers, Section 4: Resources and Tools for Data Centers covering resources and tools for data centers, Section 5: Research Energy Conservation Technologies and Measures covering energy efficient technologies and methods, and Section 6: Benchmarking covering benchmarking.

Section 2: Data Center Identification and Characterization

A data center consists of many kinds of computers, servers, electronic storage devices, telecommunications equipment, and their associated support equipment, infrastructure, and buildings. The purpose is to process data in any number of ways. There are centralized areas where this processing includes backups, application processing and telecommunications. There generally is also redundant equipment for disaster recovery and data storage. In addition to the data processing equipment, a data center will also include an electrical infrastructure containing transformers, an uninterruptable power supply (UPS) system, a power distribution unit (PDU) system, a heating, ventilation, and air conditioning (HVAC) system, an air handling system, and lighting. This section describes the generation of a list of data centers in Minnesota and how these centers fit into various schemes that can be used to classify the centers.

Data Centers in Minnesota

A list of data centers or likely data centers was identified as a starting point using Dun and Bradstreet's Million Dollar Directory. First, a list of companies was generated containing a NAICS code of 518 (the information sector). These companies include internet service providers, web search portals, data processing, hosting, and related services. This search resulted in 395 data center facilities. An additional assumption was made that any facility with at least ten million dollars in sales has a data center. This resulted in the identification of 3438 additional facilities with data centers. Finally, the assumption was made that facilities with NAICS code 611310 (universities) also have a data center. This search produced an additional 198 facilities. The final result was an excel spreadsheet with 4031 non-duplicated facilities that represent potential data centers.

Data Center Power Consumption and Rebate Data

Another early step in the project was the attempt to obtain power consumption and rebate data on Minnesota data centers from utilities which have data center customers. Two issues prevented acquisition of this information. First, since organizations identify themselves by their main line of business, a utility may not know if any one organization has a data center. Second, confidentiality issues prevent utilities from distributing energy use and rebate information without permission from the clients involved.

Another important observation makes the procurement of energy consumption data less useful at this time. Many data centers do not separately measure incoming electricity used to support the infrastructure for the actual electronic and data processing. In other words, data center managers generally do not know their power usage effectiveness (PUE), an important measure of energy efficiency that will be discussed later in this paper. This is a major barrier to defining the energy efficiency opportunity in Minnesota data centers and motivating companies to invest in data center energy improvements which will be expanded upon later in Section 7.

Data Center Classification

No single classification scheme is universal for data centers. Instead data centers can be categorized by one of several different prevalent schemes: including by function, size, uptime, whether it is a private or public facility and whether it is a traditional data center (serving the needs of a single client) or a virtual data center (serving multiple clients or applications). Regardless of classification, specific data center functions have a large impact on how they operate and what energy efficiency opportunities are available and practical. As a result, it is important to differentiate between the types of data centers so the relevant language and technologies that are available to them can be properly applied. In other words, the proper context for a specific "data center" must be used in order to evaluate the options for energy efficiency within the overall facility.

The following definitions are important to help classify data centers throughout this paper. While there may be crossover in the organizational categories, these can be functional definitions for the purposes of this work.

Stand-alone - This is a physical category where a facility is dedicated to data processing. The purpose of the entire facility is to operate and maintain data processing equipment and services. This includes

power management functions, environmental control rooms, HVAC functions, physical security, and personnel amenities. Generally there are few if any functions contained in the space that are not directly related to the operation and management of the data center.

Embedded - This is physical category where a data center is contained or enclosed within a multipurpose building. The facility is not exclusively dedicated to support the data center. Power management, HVAC functions, physical security and personnel amenities are shared with multiple building tenants or business functions.

Independent - This is an organizational category where the data center is the primary business function. In other words, it is controlled and operated by the organization that owns it for the purpose of providing hardware and software services to external clients. These are generally data centers that are dedicated to serving paying clients who use their equipment or services.

Integrated Business Unit (IBU) - This is an organizational category where the data center is a support function of the primary business. This class of data center is wholly controlled and operated by the organization that owns it for the purpose of providing an internally maintained business service. These data centers are dedicated to serving the parent company exclusively.

Public – This is a use category where the data center services are accessible by the general public. Services on public sites may be free or for fee depending on the services provided. Examples of publicly accessible data center services include search engines, networking sites, agency or organizational sites catering to publicly available information. There may be secure areas of public sites.

Private – This is a use category where the data center services are not openly accessible by the general public. Services may be restricted to staff or securely allowed clients. Private data centers may manage some publicly available content.

Classification of Data Centers by Function

Co-Location

Co-location facilities (co-los) rent or lease space to their clients who install their own equipment. As such, co-los provide the physical infrastructure needed by its clients to operate their equipment and control access. This includes the building space, electrical power system, environmental control, physical security and its protocols, and electrical power. The costs for these are charged to clients as overhead and/or rent.
Ownership, location or physical facility type - Co-lo facilities manage hardware and physical space. They can be stand alone or embedded facilities and are generally independently owned.

Service Providers

These data centers provide computing and managed services to off-site users. They own and operate all the equipment, infrastructure, and software. They provide selected data center services such as those listed below per a service level agreement (SLA).
Ownership, location or physical facility type - Service Providers manage hardware, software and physical space. They can be stand alone or embedded facilities and are generally independently owned. Examples of Service Providers are listed below.

Information Services
- Backup
- Data Recovery
- Storage
- Security
- Network Management
- User Management
- Data Management

Communication Services
- Internet Service Provider (ISP)
- Email Service Provider
- Telephone
- Telepresence
- Video Conferencing
- Voice over Internet Protocol (VOIP)

Mixed Use

Mixed use facilities provide both physical infrastructure for rental like the co-los and managed services of service providers as listed above. They may provide these services on their clients' equipment as well as on the data center's own equipment.

Ownership, location or physical facility type - Mixed Use facilities/providers manage hardware, software and may or may not manage physical space. They can be stand alone or embedded facilities and can be either independently owned or an internal business unit of a company.

Classification of Data Centers by Size

Much of the literature that references types of data centers are based on the square footage of the data center rather than its function. However, there is no standard for how data centers are classified by size. For example, references to data center size may also include the quantity of servers or power consumption, but those numbers may be subject to change over a short period of time due to growth or the implementation of energy efficient measures and/or the installation of more efficient equipment.

According to the Environmental Protection Agency (EPA) ENERGY STAR Program, a data center is an IT infrastructure comprised of servers, data storage, dedicated power delivery and dedicated cooling capacity. It is the presence of cooling capacity that sets apart data centers from other IT infrastructure sites as defined by ENERGY STAR. The EPA data center size classification system is shown in Table 1 (Understanding and Designing Energy-Efficiency Programs for Data Centers, 2012). It is based on area with further estimates of how many there are in the country and how many servers they may contain. Based on the EPA ENERGY STAR Program, server rooms and closets are not considered data centers since they do not have dedicated cooling systems and electrical infrastructure.

Table 1: EPA Data Center Categories

Category	Area (sq ft)	# Facilities	# Servers
Utility scale	> 100,000	7,000	500
Enterprise	> 5,000		
Localized	500 – 5,000	74,000	50
The following are not considered data centers by the EPA ENERGY STAR Program			
Server rooms	200 – 500	1,200,000	3
Server closets	< 200	1,300,000	2

The IBM data center classification system is shown in Table 2 (IBM, 2012). It is similar to the EPA's, but it does not exclude server closets and rooms as data centers. Neither the EPA nor the IBM scheme uses power consumption or power density as a basis for classifying data centers.

Table 2: IBM data center categories

Designation	Description
Enterprise-Class	As the primary server location for an organization, it is a very large embedded or stand-alone facility, often in excess of 15,000 sq. ft. This facility has advanced cooling systems, redundant power and is protected by multiple levels of physical and electronic security.
Mid-tier data center	Primary server location for an organization that is a large embedded or stand-alone facility, often 5,000-15,000 sq. ft. It has superior cooling systems that are probably redundant and is probably protected by two levels of physical and electronic security.
Localized	Typically an embedded location that is usually under 5,000 sq. ft. requiring badge or pin access and has some power and cooling redundancy to ensure constant temperature.
Server Room	An embedded computer location that usually is under IT control, usually less than 1,000 sq. ft. and has some power & cooling as well as security capabilities.
Server Closet	A very small embedded room often outside of IT control that has little to no security or cooling.

As can be inferred from these two sizing schemes, simply classifying a data center by size can be misleading since there may be a few servers in a large room and vice versa. Other factors can be considered and this is evident from the added descriptions that are given above. For example, the requirement of cooling equipment indicates that the heat given off by the servers is sufficient to require its cooling. Or the requirement of redundant diesel backup points to a data center with many critical servers. However, no entity has yet seen a need to develop more precise ways to describe the size of data centers.

Those involved in the issues of energy efficiency at data centers use data center size as the main defining criteria. The EPA will not ENERGY STAR certify a facility data center unless its floor area is at least 50% of the total area of the facility. The EPA ENERGY STAR program does not consider a room a data center, so this scheme tends to be limited to larger facilities where a good return on investment is easier to quantify. This may be due to the apparent direct correlation between size and consumption. This assumption is a good start, but may change as data centers become more energy dense and take up less area. Vendors and consultants address all sizes of data centers since energy consumption may not be their sole evaluation criteria.

Classification of Data Centers by Tier

The tier system for data center classification has been identified by the Telecommunications Industry Association in the ANSI/TIA-942 (ADC Krone, 2008). The classification system separates data centers into four tiers based on server availability, as well as by the equipment being used within the data center. Table 3 outlines the requirements and maximum annual downtime of data centers using the TIA-942 standard.

Table 3: TIA-942 Tier Data Center Categories

Tier Level	TIA -942 Requirements	Maximum Annual Downtime
1	- Non-redundant distribution path - Non-redundant capacity components - Basic site infrastructure - Expected availability of 99.671%	28.82 hours
2	- Meets tier 1 requirements - Redundant capacity components - Redundant site infrastructure - Expected availability of 99.741%	22.69 hours
3	- Meets tier 2 requirements - Redundant distribution paths serving equipment - All IT equipment dual-powered and compatible with a site's architecture. - Maintainable site infrastructure - Expected availability of 99.982%	1.58 hours
4	- Meets tier 3 requirements - Cooling equipment is dual powered - Fault tolerant infrastructure - Expected availability of 99.995%	44 hours

A separate, but similar tier system for data centers is supported by the Uptime Institute (Uptime Institute). Uptime Institute is the organization that actually certifies facilities as a specific tier. This institute has not made a specific checklist for tier certification. The Uptime Institute requirements are based on redundant capacity components, concurrent maintenance, and fault tolerance. They do have a general tier breakdown, illustrated in Table 4.

Table 4: Uptime Institute Tier Data Center Categories

Tier Level	Uptime Institute Basic Requirements	Example United States Certified Facilities
I	- Basic Capacity	- All uncertified data centers
II	- Meets tier 1 requirements - Redundant components	- University of Arkansas Medical Science - (Little Rock, Arkansas) - Titan Private Security Vault - (Tulsa, Oklahoma)
III	- Meets tier 2 requirements - Concurrent maintenance of each component possible without shutdown	- Target Corporation - (Brooklyn Park + Elk River, Minnesota) - CenturyLink Tech. Solutions - (Minneapolis, Minnesota)
IV	- Meets tier 3 requirements - Fault tolerant infrastructure: possible electrical, mechanical, and other failure modes have been identified and prevented.	- US Bancorp - (Olathe, Kansas) - Switch - (Las Vegas, Nevada)

The two tier systems can be visually differentiated by their labels: TIA-942 uses numbers, while Uptime Institute uses roman numerals. In both classification systems, tier one facilities have the least redundancy and most annual downtime. As tier level increases, data centers have more redundancy, less annual downtime, and are more able to be maintained without server shutdown.

Classification of Minnesota Data Centers

The 4,031 data centers in Minnesota are a mix of classifications, functions, and sizes. The assumption for this paper is that the 395 facilities found with the Million Dollar Directory search using the primary NAICS code 518 are independent facilities, where the data center is the primary business function. Further research is needed to determine whether facilities with the 518 NAICS code are stand alone or embedded, and whether they are used by public or private clients. The other 3,636 data centers were found by searching companies with at least ten million dollars in sales in the MDD, or NAICS code 611310 for university. These facilities are assumed to have data center locations as integrated business units where data center operations support the operations of a primary business function. Similar to the independent facilities, integrated facilities need to be evaluated further to determine which are stand alone or embedded. For some facilities, this information is confidential.

Data centers that are integrated business units can be considered of the mixed type. They run their own equipment and software to perform all of the functions needed for the organization. In terms of the various classification schemes, there can be significant overlap between independent data centers that have the 518 NAICS code, and integrated business unit data centers run by non-518 NAICS code companies. Important information includes:

- Whether a site is stand alone or embedded in a multiuse facility
- What is the data center size
- How many servers and how much peripheral equipment is needed to operate effectively

Whether a site is stand alone or embedded may be an initial indicator of energy use, and whether the site is independent or an integrated business unit may indicate the focus currently applied to energy efficiency opportunities.

Of the 395 facilities with NAICS code 518, only 50 have their floor areas listed in the million dollar directory. These 50 facilities have been sorted in Table 5 and Table 6 by number that fall within the EPA and IBM categorizations for data centers. Both of these classification systems sort the data center by size. The other facilities have not been sorted at this time, because their data center is only a part of another main business, so the facility size does not correspond to their data center size.

Table 5: IBM Categories for NAICS 518 MN Data Centers:

Designation	Description	# Minnesota Facilities
Enterprise-Class	As the primary server location for an organization, it is a very large embedded or stand-alone facility, often in excess of 15,000 sq ft. This facility has advanced cooling systems, redundant power and is protected by multiple levels of physical and electronic security.	14
Mid-tier data center	Primary server location for an organization that is a large embedded or stand-alone facility, often 5,000-15,000 sq ft. It has superior cooling systems that are probably redundant and is probably protected by two levels of physical and electronic security.	9
Localized	Typically an embedded location that is usually under 5,000 sq ft requiring badge or pin access and has some power and cooling redundancy to ensure constant temperature.	21
Server Room	An embedded computer location that usually is under IT control, usually less than 1,000 sq ft and has some power & cooling as well as security capabilities.	3
Server Closet	A very small embedded room often outside of IT control that has little to no security or cooling.	0

Table 6: EPA Categories for NAICS 518 MN Data Centers:

Category	Area (sq. ft.)	Facility Count
Utility Scale	>100,000	2
Enterpirse	5,000 – 100,000	24
Localized	500 – 5,000	21
Server Room	200 - 500	3
Server Closet	< 200	0

Figure 1: NAICS 518 Non-Metro Minnesota Data Center Locations

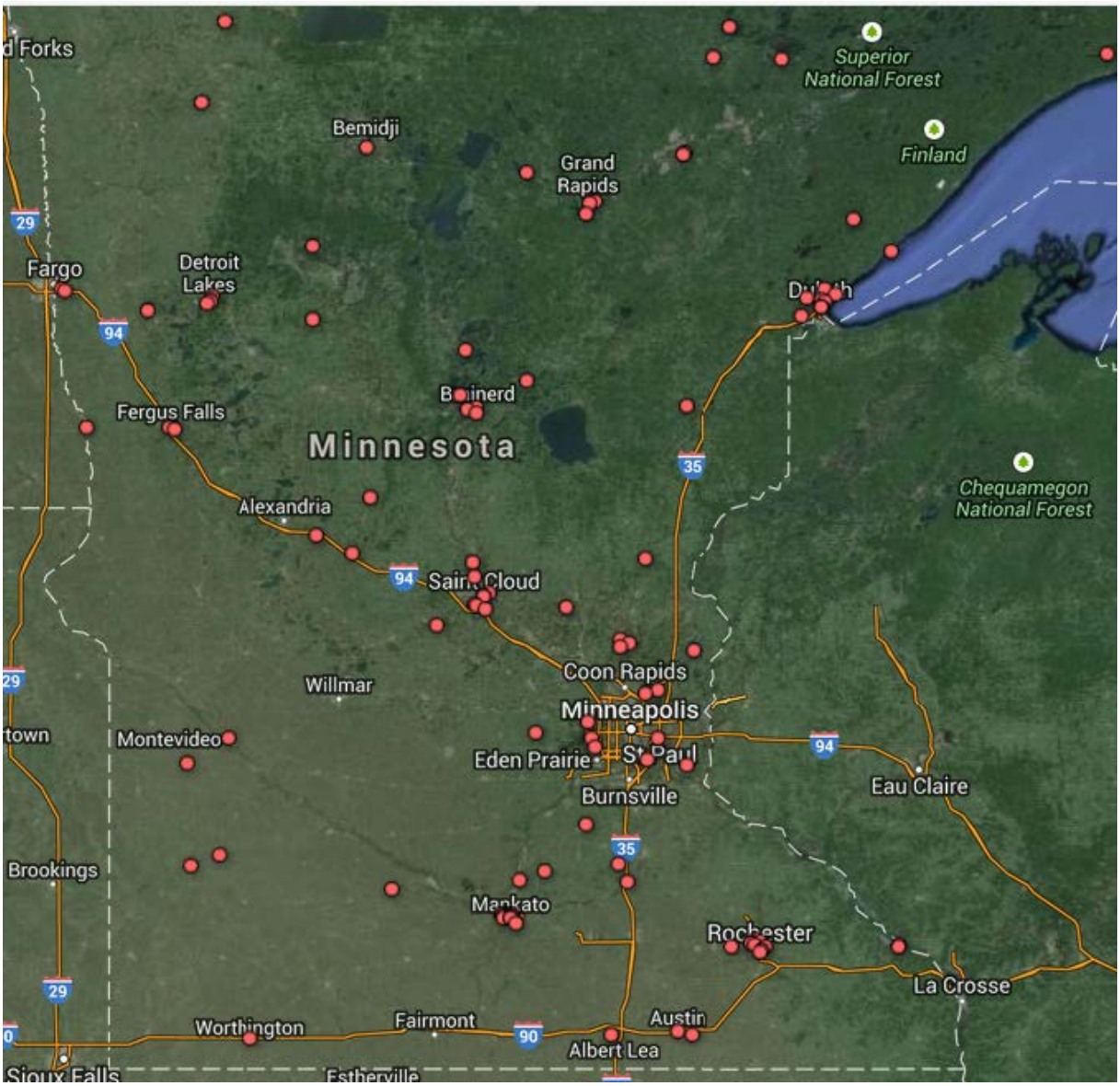

Sorting Minnesota Data Centers by location is useful in order to get an idea of the geographic distribution of Minnesota's data center energy usage, and also useful to determine which utility handles specific data centers. The 518 coded facility locations have been graphed below. The first image, Figure 1, is a view of the entire state, which shows most of the Minnesota data centers clustered near the metro area. The next view, Figure 2, shows the metro area itself, in order to get more detail as to where these centers are located.

Figure 2: NAICS 518 Metro Area Data Center Locations

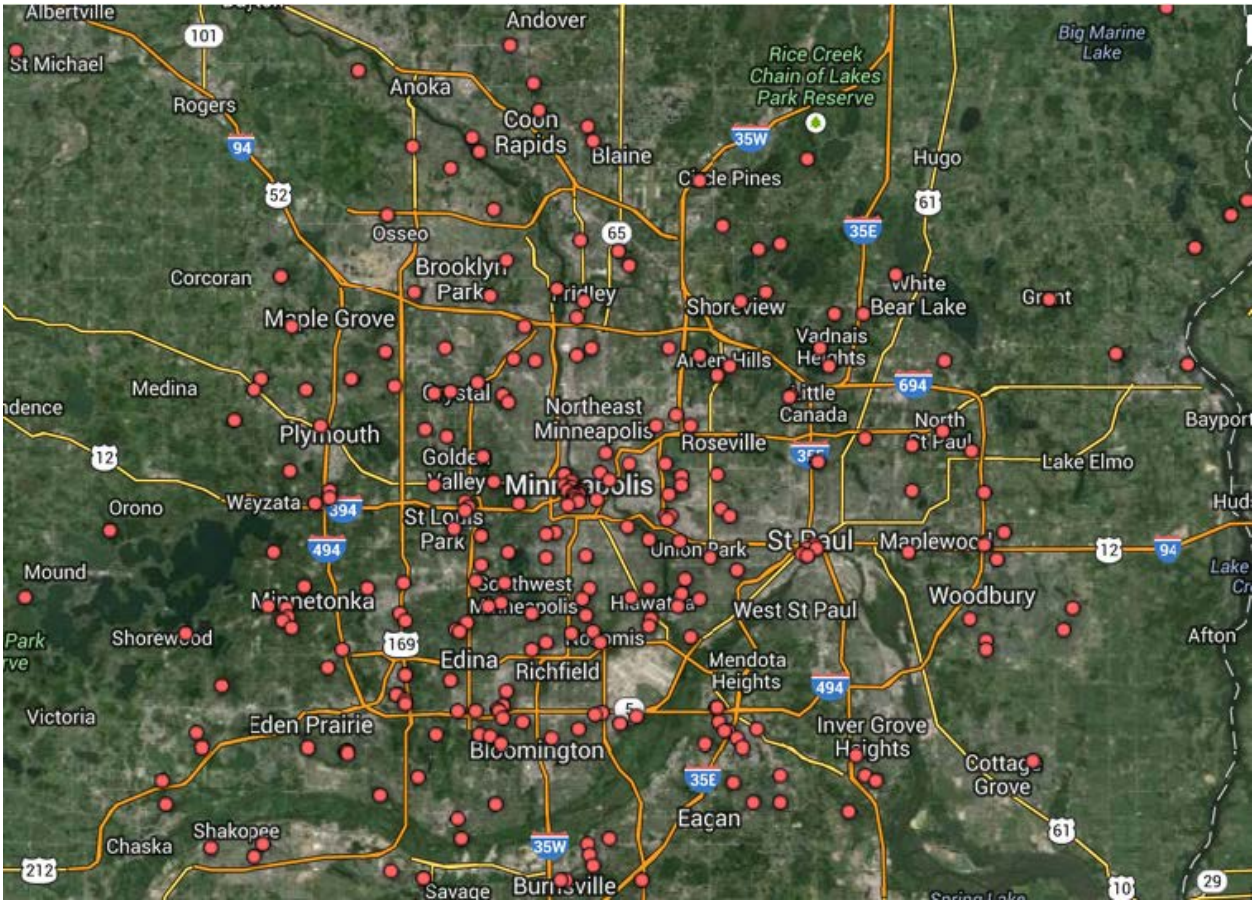

Section 3: Data Center Site Visits

Important as it may be to have power consumption data, visiting data centers is at least as important to clarify the opportunities and options for energy efficiency in practice, especially for introductory work that attempts to characterize data centers in the state. A range of organizations were visited in order to observe the different ways data centers are operated. Visits included some data centers that were independent and some that were integrated business units within a company. It also included data centers and companies of various physical size since the size of the company may correlate with electrical consumption.

Table 7 shows the organization description, location, relative size, and type of data centers visited.

Table 7: - Data Center Visits

#	Organization Description	City	Size (IBM criteria)	Function	Description
1	Data Center	Eden Prairie	Enterprise	Service Provider	Embedded Integrated Public
2	Data Center	Minneapolis	Enterprise	Co-Location	Embedded Independent Public
3	Data Center	Minnetonka	Enterprise	Mixed Use	Embedded Independent Public
4	Data Center	Minneapolis	Mid-Tier	Service Provider	Embedded Independent Public
5	Government	St. Paul	Mid-Tier	Service Provider	Embedded Integrated Public
6	Printing	Owatonna	Mid-Tier	Service Provider	Embedded Integrated Private
7	Software Developer	Minneapolis	Server Room	Service Provider	Embedded Integrated Private
8	Health Service	Duluth	Server Room	Service Provider	Embedded Integrated Private
9	Data Center	Edina	Server Room	Service Provider	Embedded Integrated Private
10	Fabricated Metal Manufacturer	St Louis Park	Closet	Service Provider	Embedded Integrated Private
11	Government	Apple Valley	Closet	Service Provider	Embedded Integrated Private

#	Organization Description	City	Size (IBM criteria)	Function	Description
12	Non-Profit	Minneapolis	Closet	Service Provider	Embedded Integrated Private

A form was developed to use to gather information during the visits (see Appendix A).

Visit Procedure

Each facility was contacted in order to gauge their interest in spending the time to host a visit. Contact was made with a phone call which was followed up with an email. Information was sent describing the grant, who would be visiting, how long the visit was expected to take, possible benefits, and the request to visit the facility. Only one facility contacted declined to participate. Upon arrival at the facility, a short meeting was held for introductions and to explain the purpose and procedures of the visit and to answer any questions. The tour was conducted including further discussion and questions about the equipment, procedures, personnel, building, and other issues related to the operation of the data center. A short meeting was held at the end of the visit to answer any last questions and to inform the personnel about any, further contact that might be needed. As a minimum, a follow-up email was sent thanking the facility personnel for spending time during the visit.

Results (Observations)

The data centers visited included sizes ranging from the very small to the very large, and a combination of public/private with a variety of functions as seen in Table 7. Most of the data centers visited were embedded within multiuse facilities. Several observations were made related to data center physical layout, hardware in use and the physical location of the hardware, as well as data center operational strategies.

Data center physical space and equipment layout vary widely among the sites visited. One of the very small data centers was in a large room, but because of the number of servers and the actual area taken up, could have been in a much smaller area and therefore was placed in the server closet category in Table 7. From square foot area alone, this facility may have been in a different category such s server room or localized facility based on the IBM definitions. Similarly, other facilities had larger facilities than required for the immediate hardware due to consolidation of equipment or implementation of more efficient equipment. Additionally, expectation of growth may result in a facility that is over sized for the equipment currently in use. These observations indicate that attempts to classify a data center by size alone may be a useful first step to get an overall impression of sector energy use. However, without a site visit or additional information from the owner, an area-only analysis may result in incorrect assumptions about operation or energy intensity and lead to inaccurate site-based energy consumption and conservation opportunity estimates.

While the hardware for most of the data center facilities visited is centrally located, distribution of data center hardware and support equipment around the building or facilities can depend on the facility design or how space has been adapted in existing facilities. Typically the computing equipment is located in a server room with cooling being done by the facility's overall HVAC system. The UPS is

separate from the computing equipment in another room, and perhaps not on the same floor as the server room. In one case observed, the equipment was distributed over a wide number of server closets across an extensive campus. This type of distributed condition may be more common with computing and server systems that have develop over time rather than a facility built with the intention of housing all the requirements for a company's servers.

Other variances among the centers observed were equipment age and operating practices. One data center had some equipment in excess of 20 years old and was in the process of eliminating or replacing it. Another was brand new and growing very rapidly into a large space with newer, presumably more efficient equipment. In general, smaller, private data centers did not have dedicated cooling equipment.

Overall, it was observed that data center staff members have an understanding of energy conservation opportunities at their facilities. However, these staff members do not have measurements of how much energy their operations consume or the resulting impact of their data center on the overall operating costs of their company. Without energy measurements, cost-benefit and return on investment cannot be calculated for data center improvements. This is the major barrier to data center efficiency projects.

Section 4: Resources and Tools for Data Centers

At least 80 websites and 130 publications were discovered and reviewed to some extent. The amount of data and information available that addresses data center energy efficiency can be overwhelming and many aspects of the topic are covered. The breadth of information ranges from rebates to estimates on how long a data center can use free cooling depending on location. Descriptions of different configurations and designs abound. Both free and fee-based assistance and information are available. Consultants offer much information freely on their websites. Governmental and non-profit organizations have developed tools and calculators to estimate how well a data center compares to others and are willing to share best practices.

Government Agencies

Federal agencies have committed resources to address national trends of energy consumption. A study was authorized in late 2006 by Congress to determine how much energy is used by data centers. This study was the result of an EPA response to Public Law 109-431 in August 2007. The initial work has initiated ongoing discussions, reports and launched a data center program website. This website is used by EPA and DOE to inform the industry and stakeholders about the importance of energy efficiency in the data center sector. The publication "Fact Sheet on National Data Center Energy Efficiency Information Program" is an excellent overview of the EPA and DOE programs and how they complement each other (National Data Center Energy Efficiency Information Program). In addition, the EPA conducts webinars in conjunction with their consultants and partners on energy efficiency in data centers. These webinars are open for public participation, and are archived within the ENERGY STAR website. (ENERGY STAR) The most recent data center webinar scheduled by the EPA took place August 7, 2014.

Industry Organizations

Membership and trade organizations serve a useful purpose in disseminating industry relevant information through meetings, webinars, and publications. Many of these organizations set and

maintain industry standards and operating protocols. Two of the organizations are discussed in more detail here since they have a strong focus on data center energy efficiency. Additional organizations are referenced in Table 8. The information shared by these organizations is most relevant to large data centers. Assistance for small data centers may be more effectively delivered by local chapters of trade associations such as the Association for Data Center Professionals, AFCOM.

Table 8: Industry Organizations

Organization	Purpose	Types of Resources Provided
American Society of Heating, Refrigeration, and Air Conditioning Engineers, Inc. (ASHRAE) TC 9.9	To become an engineering leader in HVAC and an effective provider of technical datacom information	Standards, handbooks, technical publications, white papers
Association for Data Center Professionals (AFCOM)	To support education and business needs of data center and facility management professionals around the world.	Articles, case studies, white papers, magazine, webinars, networking
Association of Energy Engineers (AEE), Twin Cities	To promote scientific and educational interest within the energy industry in order to promote sustainable development.	Seminars, conferences, journals, books, certification programs.
Datacenter Dynamics	To provide knowledge and networking to professionals that design, build, and operate data centers.	Conferences, a magazine, web based resources including white papers, blogs, and webinars
Uptime Institute	To provide research, education, and consulting to improve data center performance and efficiency	Tier certification, education, research, case studies, and technical papers
Green Grid	To improve resource efficiency of information technology and data centers throughout the world.	Networking, white papers, calculation tools, industry glossary.

An important standard-setting organization is the American Society of Heating, Refrigerating, and Air Conditioning Engineers, Inc. (ASHRAE) which sets design and operating standards for equipment and environmental controls. Specifically, these designs and standards are managed by the following subgroup: Technical Committee 9.9 Mission Critical Facilities, Data Centers, Technology Spaces and Electronic Equipment_Bibliography.

Green Grid's mission is to be the global authority on resource efficiency for data centers. It hosts a library, blogs, and events that cover a wide range of data center issues. Green Grid was instrumental in developing the power usage effectiveness (PUE) measurement standard for data center energy consumption. This measurement compares the energy used by the electronic processing of the IT equipment to the energy used by the infrastructure that supports it. This protocol was developed in collaboration with the U.S. EPA, the DOE, the Uptime Institute, ASHRAE, 7x24 Exchange, and the U.S.

Green Building Council, the developer of the Leadership in Energy and Environmental Design (LEED) framework.

Tools, Calculators, Best Operating Practices

Tools and calculators take information and data from a specific facility and perform operations that indicate whether certain energy efficiency technologies or practices can be implemented and/or the likely rate of investment return. They are used as part of a due diligence or benchmarking process when data centers are considering changes for a more efficient operation. Users must be aware of the assumptions and manipulations behind these calculations so they can make a judgment as to whether they are relevant to their specific situation.

Best operating practices are suggestions and guidelines to make an operation more efficient. Implementing industry best practices often do not need very large capital expenditures, if any. They address ways to improve the existing equipment configuration with procedures and not replacement or upgrades. Best practices also may suggest optimal operating conditions (such as environmental controls) for a given situation. The following are a few resources that may be useful to data center managers or assistance providers.

The U.S. EPA and DOE focus on large, stand-alone data centers. As such, information from these sources emphasize energy efficiency methods and technologies that are system-wide. These agencies have the authority to certify entire buildings or systems with programs such as ENERGY STAR (ENERGY STAR) The EPA has developed a web application called Portfolio Manager that shows how a specific operation compares to a collection of data centers with a process called benchmarking. If a facility is below the mean of this collection, their ranking indicates that the data center manager could do something worthwhile to improve the energy efficiency of the facility which may have a good return on investment. In addition, the DOE has developed an application called DC Pro (Data Center Profiler) that analyzes how energy is used within a facility. It can also be used to identify and evaluate specific energy efficiency opportunities.

Lawrence Berkeley National Laboratory (LBNL) has a comprehensive Data Center Energy Management web page with tabs that cover benchmarking, best practices, design, and case studies, to mention a few. Links to many other resources and documentation are included in that source.

Consultants and vendors offer technical information about energy efficiency in data centers. They are very open about disseminating this information in spite of the fact that they are selling services. Hewlett-Packard and IBM are large vendors who provide specifics about energy efficient equipment and conservation techniques. They also publish white papers on studies they perform to determine best practices. Other equipment vendors that have a strong focus on data centers, such as Schneider and Emerson Electric, offer very comprehensive suites of hardware and software that monitor data center operations. Data center consultants often create and offer resources as well. For example, 42U is a consultant that has an energy calculator devoted to data centers where one can vary a wide range of parameters to see the impact on power reduction and savings. Their website also has much more data and information about best practices. Consultants like 42U also offer webinars.

Rebate Information

Websites of Minnesota utilities emphasize what customers can do to earn rebates. Utility rebates for data centers are usually customized and so are developed during the relationship between the utility and the customer. There are a few areas where the opportunities are sufficiently well-defined to be prescriptive and so a form supplied by the utility is completed and submitted. For example, the Austin, Owatonna, and Rochester public utilities all use the same form for a prescriptive rebate program that emphasizes ENERGY STAR hardware. The incentives offered by various Minnesota Utilities are outline in Table 9.

Table 9 - Select Minnesota Utilities Data Center Efficiency Incentives

Utility	Service Territory	Data Center Incentives Offered
Austin Utilities	City of Austin	Prescriptive rebates on cooling equipment, servers, and clients.
Dakota Electric Association	Dakota county	Low interest energy efficiency loans, rebates on cooling equipment, audits, consulting and monitoring.
Minnesota Power	Northeastern Minnesota	Offer standard rebates, performance rebates, etc.
Otter Tail Power Co	Western Minnesota	Grants available for conservation and efficiency improvements based on demand and kwh saved.
Owatonna Public Utilities	Owatonna area	Prescriptive rebates on cooling equipment, servers, and clients.
Rochester Public Utilities	City of Rochester	Prescriptive rebates on cooling equipment, servers, and clients.
Xcel Energy	St. Paul/Minneapolis and suburbs	Specific Data Center Efficiency rebate program involving an energy study, cost estimates of energy saving measures, and rebate information. Study rebates up to 75% or $25,000, and rebates of $400 per kW saved in preapproved projects.

The Consortium for Energy Efficiency (CEE) has put together a spreadsheet of the incentives offered by CEE member utilities. Table 10 lays out the relevant categories listed in that spreadsheet, as well as the incentives offered by the Minnesota CEE member (Xcel Energy) and other national CEE utilities. The purpose of this table is to compare the incentives offered in Minnesota with those offered by the rest of the nation in order to generate ideas as to possible additional incentives that could be offered in Minnesota.

Table 10 – CEE Incentive Comparison

Incentive Category	Xcel / MN	Other National Incentive Options
New Data Center Design Assistance	Covers $25,000 up to 75% of data center efficiency study (requires preapproval).	New construction assistance. Incentives for reporting the results of an early team meeting addressing efficiency.
Data Center Assessment, Audit Assistancehttps://www.dakotaelectric.com/	Covers $25,000 up to 75% of data center efficiency study (requires preapproval).	Free walkthrough energy audits for commercial facilities. Funding for an efficiency study.
Data Center Commissioning, Monitoringhttp://www.mnpower.com/	Recommissioning and retrocommissioning for facilities greater than 50,000 square feet.	Incentives at .09/kWh and $1.00 / therm and $100 / on-peak kWh, capped at 50% of cost of the retrocommission. Other utilities use different square footage requirements of 30,000 and 100,000 square feet.
Prescriptive IT Measure Support (Servers, Storage)https://www.otpco.com/	$400 rebate for implementation of measures recommended through an efficiency study.	$250 - $350 per server removed for virtualization. Others do 20% of a virtualization project cost up to $150,000.
Prescriptive Facilities Measure Support (Computer Room Air Conditioning Units or CRACs, Chillers, UPS, Power Distribution, etc.)http://www.owatonnautilities.com/	General incentives available for lighting, HVAC, chillers, motors, and Variable Frequency Drives (VFDs).	General incentives available for HVAC, chillers, motors, VFDs, UPS, cooling towers, thermal energy storage systems, CRACs.
Prescriptive Computing Supporthttp://www.rpu.org/	Custom Only	$6-$8 dollars per PC for power management software. $15 per desktop computer for network power management software. Incentives for infrared and plug load occupancy sensors. Incentives for purchase of ENERGY STAR PC or 80 Plus server or computer.

Xcel offers assistance up to $25,000 or 75% of a project cost for a data center study, but does not offer construction assistance. Some other utilities provide free energy audit walkthroughs, which is a great

opportunity to get a company interested in energy efficiency improvements. It is also an opportunity for a company to be persuaded to commit to an energy efficiency project based on the favorable cost benefit analysis likely to result from such a walkthrough. Xcel provides recommissioning and retrocommissioning assistance for facilities of greater than 50,000 feet. Another utility clearly lays out an incentive plan for retrocommissioning by kWh, therm, and on-peak kWh saved. This type of layout makes it very easy for a utility manager to calculate total out of pocket cost for a retrofit, in order to quickly calculate whether the upgrade will make sense financially. Also, the minimum square footage for recommissioning and retrocommissioning rebates varies between utilities. Some utilities use 30,000 square feet, while some use 100,000 square feet, and others have no limit listed. Xcel offers a $400 rebate for implementation of efficiency study recommendations. Another incentive they could offer would be a rebate per server removed due to virtualization. Some utilities offer between $250 and $350 per server that is removed due to virtualization, while other utilities do a flat 20% rebate on a virtualization project up to $150,000. Xcel offers general incentives for lighting, HVAC, chillers, motors, and VFDs. Other utilities also have prescriptive incentives for UPS, cooling towers, thermal energy storage systems, and CRACs. Finally, while Xcel offers custom only rebates for computing support, other utilities offer $6 - $8 per PC for power management software. They also have incentives for infrared or plug load occupancy sensors, and incentives for purchasing ENERGY STAR PCs or 80 Plus servers or computers. Another possible incentive option would be to provide a rebate for companies who decide to eliminate their on-site data center and transfer their information to an independent, stand-alone facility. The justification for this rebate would be based upon the difference in efficiencies between the small embedded data center and the large, independent data center.

Section 5: Research Energy Conservation Technologies and Measures

Energy Conservation Opportunities (ECOs) can be sorted into five categories: Environmental, Electronic, Electrical, Educational, and Elimination. The environmental technologies have the biggest impact and are those that control the data center temperature, humidity, and air flow. The heating, ventilation, and air conditioning (HVAC) system and equipment are key to controlling the environment of the data center spaces efficiently. The electronic category of ECOs relates to the computing equipment itself and involves consolidation, virtualization, and the use of equipment manufactured to be energy efficient as rated by the ENERGY STAR program. Electrical ECOs relate to how electricity is routed from the incoming meter to the servers. This includes the use of efficient transformers, power distribution units, uninterruptible supplies, and lighting. The educational category refers to informing users or clients of data centers how their equipment or applications can be optimized to reduce electrical consumption. Finally, the elimination category is comprised of out-sourcing a data center operation to a cloud vendor who ideally can find higher efficiency through consolidation and economies of scale.

Environmental

Environmental ECOs will have the largest impact on a data center's efficiency improvements. An important aspect is the installation of an efficient HVAC system. High efficiency HVAC systems are characterized by variable frequency drives (VFDs) and closed-loop cooling. Once an efficient system is installed, the best practice is to maximize the server area temperature. A 1°F rise in server inlet temperature is estimated to save up to 5% in HVAC energy costs according to energystar.gov in *Server Inlet Temperature and Humidity Adjustments*. However, higher temperatures may shorten the life of

equipment and must be taken into consideration in calculating the equipment's total cost of ownership (TCO). Additionally, higher temperatures can cause the algorithms within some data center equipment to compensate by activating an internal fan, this can potentially offset any gains found in the cooling process. ASHRAE recommends running data centers between 64.4° F and 80.6° F between dew points of 41.9° F and a 59° F. This corresponds to relative humidity ranges from 45% to 85% at 64.4° F, and between 26% and 48% at 80.6° F, which can be determined at a specific temperature by using a psychometric chart.

Computer room air conditioners (CRACs) operate most efficiently when the difference between the incoming and outgoing air temperature is maximized. As a result managing air flow through the electronic equipment must be strictly controlled to eliminate mixing of the cool air from the CRACs with outgoing warm air from the servers. The configuration used to control air flow depends on how much equipment there is to cool, but generally depends on the equipment being in rows. The most common way is to place the servers in rows with the backs of the servers facing each other. Cool air is directed from the CRACs to the front of the servers and the warm air from the servers is directed back to the CRACs. Mixing is prevented by enclosing either the backs of the servers that directs the air to the CRACs (hot air containment system or HACS) or the front of the servers to direct cool air to the front of the row (cold air containment system or CACS).

Another variation that prevents mixing of cool and warm air is the use of vertical exhaust duct (VED) chimney cabinets. Server cabinets are built with closed backs and the warm air is directed through chimney ducts to a drop ceiling plenum back to the CRACs. This system, like the HACS system, allows for more personnel comfort levels since room ambient temperature is close to the supply cool air temperature.

A third variation is rack cooling. In this configuration cool air is drawn in through the front of the servers from the room as usual in a HACS, but then the warm air coming out the rear of the servers is directed to a heat exchanger where it is cooled immediately within the enclosed space of the rack and ejected to the room. This can be done with a single rack or a row of racks. There is no firm guidance which of the three variations works best. It depends on personal preference, costs, whether building new or working with pre-existing infrastructure, and other factors.

In addition to configuring equipment to keep the cool and warm airstreams separate, any rack space not occupied by a server should be closed off with blanking panels to prevent mixing of air. Mixing also occurs at points where power or data cabling enters the cabinets. These areas should be sealed with grommets. Unobstructed air flow is required for optimal cooling efficiency and can be impeded by haphazard cabling. Cabling should be routed in an orderly fashion to prevent this. This can be done with a combination of locating cables overhead and clustering cables off to the side of the servers with plastic ties.

In order to prevent water condensation issues, humidity in data centers should be controlled with an adiabatic system. Optimal humidity is important within a data center because as humidity increases within a server room, time to failure rapidly decreases. High levels of humidity are associated with corrosion, while dry air increases the risk of electrostatic discharge. Unlike steam, an adiabatic system uses little to no heat transfer to humidify the air. Adiabatic humidifiers also help to cool the space by using the heat of the room to vaporize the water. Types include ultrasonics, wetted media, and high pressure fogging. As a best practice to conserve energy and reduce operating costs, humidity should be allowed to vary as much as possible within the recommended range. The ASHRAE standard for humidity control recommends a dew point between 41.9° F and 59°F.

Air economization is the use of outside air to cool a data center and is an effective and widely-used alternative to CRACs. The cooler and drier the climate, the more air economization can be used. Intel ran a proof-of-concept test and showed that a 10 MW data center can reduce energy by 87% and save almost $3 million per year using an electricity cost of $.08/KWh (Intel 2008). Due to widespread knowledge and familiarity with this process, data centers that can effectively use air economization either have it built into new construction or it has already been retrofitted. Larger MN stand-alone facilities use outside air cooling extensively to manage heat. Another way to handle the heat that comes off of servers is to use it to heat the other spaces of the building. This may be more suitable for embedded data centers, however, ducting and controls must be carefully selected and installed to make this effective.

Electronic

The best practice of inventorying a data center's hardware and software may lead to the ECO of consolidation. Older equipment may be removed and its functions transferred to something more efficient, namely, ENERGY STAR rated servers. Equipment that is powered up but not being used or used minimally is a prime candidate for retirement. Applications installed but not used should be removed. Applications should be reviewed to see if there are more modern ones that operate more efficiently. These are examples of consolidation to minimize the amount of computing power and save energy.

After consolidation, virtualization may be considered. Virtualization allows for different operating systems to be run on one server. This is done through a piece of software called the hypervisor. The hypervisor is also known as a virtual machine manager. It manages pieces of software meant to act as a virtual version of server hardware. Instead of having to dedicate a server to one operating system, a server using virtualization can host different operating systems through a single server, reducing the number of servers necessary in a data center.

Electrical

Power usage effectiveness (PUE) is a common, dimensionless metric used to compare the power that comes into the data center to the power that is actually used for electronic processing, Equation 1.The ideal, theoretic limit is 1.0 which is achieved when all the incoming power is used for data processing. This is currently not achievable because power is also used to control the environment, move the air, produce lighting, and provide electrical transformation. Higher PUE indicates less efficient power consumption. Another permutation used is the reciprocal of the PUE called data center infrastructure efficiency (DCiE). This effectively gives the percentage of total incoming power to the power used for data processing. So a PUE of 2.0 is equivalent to a DCiE of 50% which means half the incoming power goes to data processing. Typical PUE values of the more efficient data centers are less than 2.0.

Equation 1 – PUE Calculation

$$\text{Power Usage Efficiency} = \frac{\text{Data Processing Energy} + \text{Lighting} + \text{HVAC} + \text{etc.}}{\text{Data Processing Energy}}$$

Seven organizations developed a standard for tracking power use in data centers. This standard includes four categories of the PUE as outlined in Table 11. The category used depends on the quantity of data available to calculate it:

- PUE_0, is the first and most basic category and is used if only electricity powers the data center. It is the peak load demand of a consecutive 12-month period. It is measured at the output of the UPS system and compared with the utility bill demand in kilowatts (kW).
- PUE_1 is the actual consumption of power over a 12-month period, also at the UPS output.
- PUE_2 is the consumption of power over a 12-month period at the power distribution unit (PDU) output.
- PUE_3 is the consumption of power over a 12-month period at the input to the data processing equipment.

Table 11 - PUE Categories

	PUE Category 0	PUE Category 1	PUE Category 2	PUE Category 3
IT Energy Measurement Location	UPS Output	UPS Output	PDU Output	IT Equipment Input
Definition of IT Energy	Peak IT Electric Demand	IT Annual Energy	IT Annual Energy	IT Annual Energy
Definition of Total Energy	Peak Total Electric Demand	Total Annual Energy	Total Annual Energy	Total Annual Energy

The higher the category number, the closer the measurement is taken to the actual data processing equipment. This increases measurement accuracy for the energy use in processing operations but it also increased measurement cost since more meters are needed. In addition, the higher categories allow for the incorporation of other energy sources such as gas and steam in the total data center power measurement if they are utilized. In much of the data center literature, the PUE level is not indicated. Since the basic PUE measurement is not an absolute measure of the processing operations alone, use of standard PUE should only be taken as a relative measurement within the context of the reporting system being used.

Based on the above discussions, the electricity that flows into and through a data center system must be measured in order to establish the efficiency of its components and calculate the PUE. The majority of data centers do not have monitoring and control systems (MCS). Installing an MCS has become an ECO as well as a best practice since tracking energy use is a key to measuring and verifying energy use and the impact of improvement efforts. A minimal MCS consists of watt meters after the main components of a data center (Figure 3). The data required for the basic PUE calculation is a meter immediately after the incoming utility meter and a meter after the UPS. The next step in complexity is to log the meter readings to obtain continuous charts.

A couple of additional ECOs deal with facility electrical infrastructure. The first is that all data center support equipment should be late model ENERGY STAR rated equipment including the uninterruptable power system (UPS), the power distribution unit (PDU), and transformers. The second is that lighting of a data center should be controlled with motion sensors and other methods to turn on lights only when needed. Additionally, the lighting itself should be using energy efficient equipment such as LEDs, CFLs, and T8 bulbs.

Figure 3: Minimal Sub-metering for Data Centers

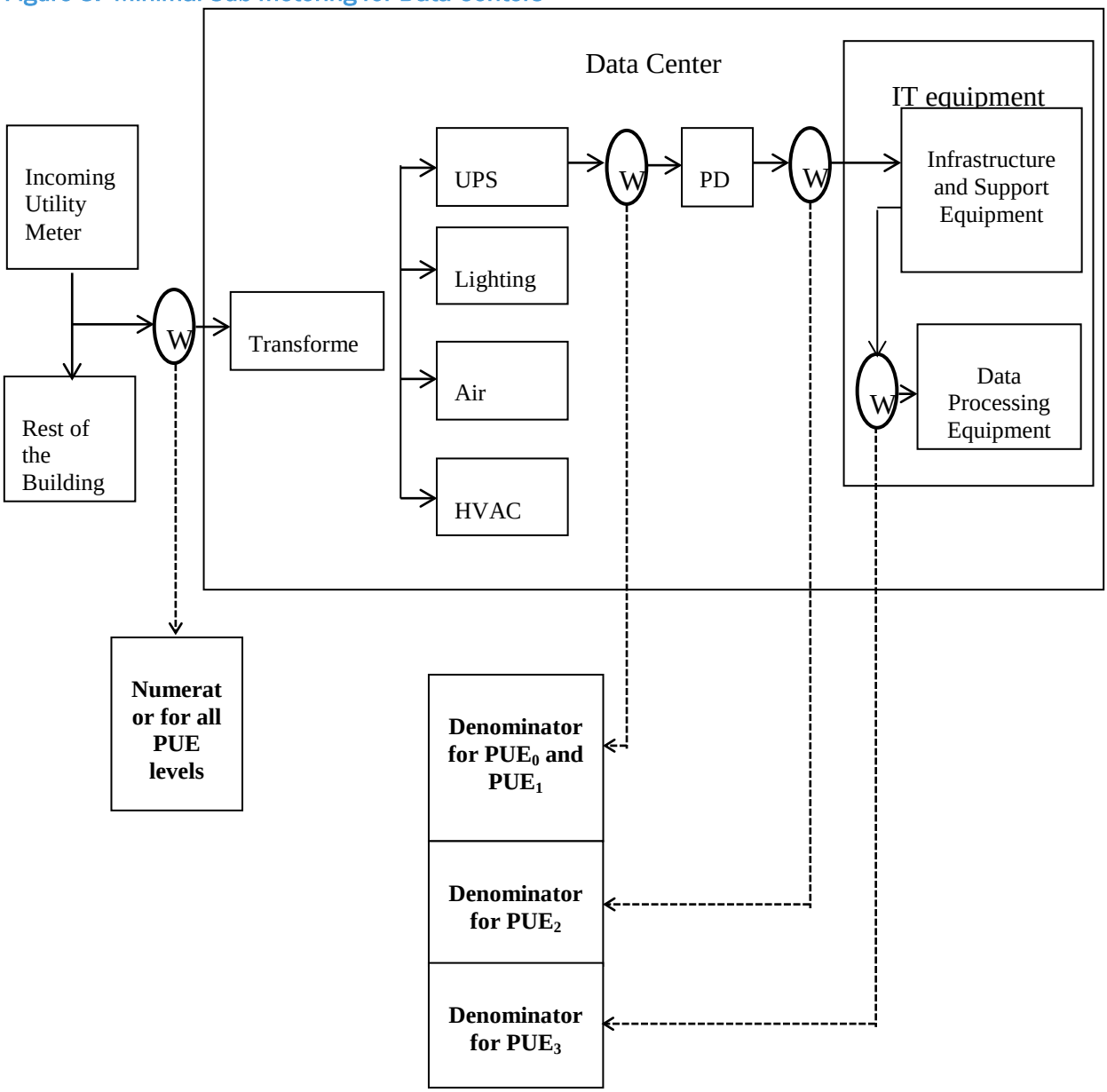

Educational

External parties may own the equipment and software applications that are housed in co-location facilities. Managers at data centers that provide services or infrastructure to clients have an opportunity to improve the energy profile of their facilities by educating their clients on best energy efficiency options for hardware and software as described above. In order to run the most energy efficiency operations, data center managers at these facilities would serve their facilities and customers well to become a trusted source of information of current best practices and understand opportunities for equipment efficiency optimization. Clearly measuring and reporting energy consumption and resulting costs for managed systems to data center clients may be an effective way to keep the impact of hardware and software choices more obvious and actionable. This may be an opportunity for energy utility representatives to create products and services that assist the data center manager in tracking and communicating energy use and options to clients.

Elimination

Small to medium-sized data center managers, especially private ones, can consider out-sourcing data center functions to co-location suppliers. In some ways, this simply transfers energy use and efficiency management issues to the supplier. However, this effort towards centralization should result in better efficiency for the larger data centers as they grow. The co-location facilities can save energy and money because of the economies of scale associated with centralization and developing the specialized knowledge and investment to manage infrastructure most efficiently. The out-sourcing party will expect to save money due to the elimination of data center infrastructure and associated operational and energy costs while maintaining the function of the delivered managed services. The operation of data centers is hardware and infrastructure intensive. It is the coordination of equipment at the facility to meet the needs of the data center's users and the demands of the electronics that can have a significant impact on the cooling and other energy intensive components of the data center. While the choice to out-source data center operations is up to the individual business, utility managers could help inform their clients of the options and opportunities as well as provide incentives.

Matrix of Energy Conservation Opportunities vs. Data Center Types

For the purposes of this matrix, the size classification refers to the IBM data center classification outlined in Table 2. Server rooms and closets have been combined into the small category (S), localized is medium (M), and enterprise and utility scale are large (L). Another consideration is that small data centers do not have the heat density to justify a separate HVAC system other than perhaps fans. Those data centers that do require an HVAC system will probably also need a more dedicated electrical infrastructure. The service providers and mixed use data center types have been combined as Mixed because their ECOs are identical. An "X" in the column in Table 12 indicates that there is an ECO for the corresponding data center type.

Table 12 - ECOs versus Data Center Type and Size

ECO Type	ECO	Pure Co-lo			Mixed		
		S	M	L	S	M	L
Elimination	Out source	-	-	-	X	X	-
Electronic	Cabling	-	-	-	-	X	X
	Virtualize	-	-	-	-	X	X
	Consolidation	-	-	-	X	X	X
	High-Efficiency Servers	-	-	-	X	X	X
Environmental	High-Efficiency Cooling Equipment	-	X	X	-	X	X
	Hot/Cold aisles	-	X	X	-	X	X
	Space heating	-	X	X	-	X	X
Electrical	Efficient Power System	-	X	X	-	X	X
	High-Efficiency Lighting System	X	X	X	X	X	X
Education	Tenant Education	X	X	X	X	X	X

To summarize, related to ECOs, there are only two types of data centers, the pure co-los and all the others. Since the co-los do not own the data processing equipment within their facility, they are limited to certain ECOs that related to overall building, space, and environmental functions. However, they may have an indirect effect on the electronic ECOs with any education they may do with their clients. Except for the pure co-los, data centers can take advantage of virtually all ECOs. However, there has to be a critical mass of equipment to justify things like the use of hot/cold aisles, virtualization, cabling, and other more complex and capital-intensive ECOs. Additionally, large center managers will not take advantage of outsourcing or using cloud based services since they are the centers that handle outsourcing and run the clouds. Efficient lighting and educating the owners about electronic equipment is relevant for all types of data centers.

Section 6: Benchmarking

Overview of Major Tools Available

Benchmarking is part of the process to evaluate and improve a data center. A goal must be set to focus efforts and that goal will affect what tool to select for benchmarking. Once the appropriate tool is

selected, the data required by that tool is gathered from the facility's building infrastructure and other sources. Benchmarking tools can focus on qualitative metrics such as comparing present practices to best practices. Alternatively, they can be used to track the history of energy consumption and how reductions correlate to the implementation of energy efficient practices. Larger data centers can use a combination of best practices, history, and comparisons to other data centers to determine how they measure up to a peer group of facilities. It is important to make sure these comparisons are relevant to the facility in question.

Performance benchmarks compare object or facility characteristics or operations to a metric of interest or a set of management standards. These metrics are typically developed by various stakeholder organizations in order to set standards for measuring the current energy efficiency (or performance) of an object or facility, as well as for tracking changes in the energy efficiency of that object or facility based on the implementation of ECOs. Common examples are EnergyGuide labels for major appliances and fuel economy labels on new cars. These help consumers decide which product is most efficient based on their features and the consumer's desires. For data center energy efficiency, the common metric is the power usage effectiveness (PUE). Other numerical metrics include the efficiencies of specific equipment such as chillers and transformers.

ISO 50001 is an energy management standard promoting continual improvement for energy management. The standard specifies energy management system requirements, creating a framework for the development of energy efficiency programs. These programs include developing policies, establishing objectives, measuring, analyzing, implementing, and verifying based on the principles of continual improvement. The ISO standards are for the use of organizations to guide their efficiency efforts. ISO does not certify facilities; rather, private certification companies and organizations perform certification for a fee. The U.S. Dept. of Energy has a general tool for assisting organizations to implement ISO 50001 called 'DOE eGuide for ISO 50001.

Other benchmarking tools assess the use of best practices or modeling; these tools are applied at a tactical level, rather than the strategic level application of the ISO management methods. Relevant best practices or models are compiled and then compared to actual practices to see how far the practice is performed compared to a desired goal. The expectation is that this will set a baseline to improve upon as current practices are changed or new practices are implemented. The Green Grid Data Center Maturity Model Assessment Tool (DCMM) is an example of this type of benchmarking tool. It groups data center operations into eight areas with the best practices for each. There are six levels of best practices for the components identified by the tool. The extent to which best practices are performed for each component indicates the "maturity" of the data center. For example, in the area of Server Population, Level 0 indicates there is no policy for equipment replacement whereas Level 5 indicates replacement is based on real-time Total Cost of Ownership (TCO) and Return on Investment (ROI) analysis for each server with power consumption that tracks load and the use of smart components that turn on when needed.

Similarly, the U.S. Dept. of Energy's Data Center Profiler (DC Pro) is an on-line tool that asks questions about the overall management of energy as well as the use of best practices, equipment, and energy at the facility. The expectation is that the user will perform a series of assessments to track whether implementation of best practices is taking place and the impact it has on energy consumption. All of the data manipulation is done online and stored on the website for future use.

The Lawrence Berkeley National Laboratory (LBNL) has published a self-benchmarking guide. This puts forth a procedure for a facility to do its own benchmarking using the metrics suggested by the guide. It then describes how the metrics can be measured. In addition to these metrics, it also allows

comparison to other data centers with graphs of their metrics. The facility can then compare its metrics to individual data centers or the averages of the metrics of the entire sample. However, the data centers used for comparison are limited to California which does not reflect operations in other geographic areas. As with the other tools, the LBNL tool breaks up a data center's operation into its major components. It asks questions about the physical infrastructure. Then it asks for overall energy consumption and where it is sourced and where it goes, including the PUE. Next are questions about the environmental controls including air management, cooling, set points, and the amount of free cooling implemented. Lastly, it asks for the electrical chain loads and capacities. The result of this tool is the identification of opportunities to reduce energy usage within data center HVAC and electrical systems.

The final major benchmarking tool is the U.S. EPA Portfolio Manager, also an online tool. Its focus allows the comparison of a facility's performance to a relevant national average. This is a step towards achieving an ENERGY STAR rating for the data center. Because of this, the data requested is much more detailed than asked for in other tools. Completion of this tool results in an ENERGY STAR score between 1 and 100 that can provide motivation for improvement. Table 13 is a summary of the major, easily available benchmarking tools.

Table 13 – Major Benchmark Tools

Name	Developer	Focus	Audience
Data Center Maturity Model Assessment Tool	Green Grid	Best Practices Leading to 5-year Vision	Medium to Large data centers
Portfolio Manager	U.S. Environmental Protection Agency	Energy Use Comparison to Determine ENERGY STAR Rank	Large and co-location facilities
ISO 50001	ISO	Overall Energy Management Frameworks	All data centers
DC Pro	U.S. Dept. of Energy	Best Practices and Snapshot Energy Use	Medium to Large data centers
Self-Benchmarking Guide	Lawrence Berkeley National Laboratory	Best Practices	Medium to Large data centers
Vendor specific	Vendors	Varies Based on Vendor	All data centers

Vendor and consultant benchmarks are designed to solicit business for themselves, but can serve as a rough indicator of a direction to take for further work. These kinds of tools are specific depending on the vendor's business focus. As a result, they range from the very general to the very technical. A general tool is IBM's Data Center Operational Efficiency Self-Assessment. Two completed examples of this assessment are in Appendix B. The data supplied for them comes from two site visits conducted as part of this project; some of the answers to the assessment questions have been estimated due to limited knowledge of either the question or the situation at the data center. The IBM assessment is a good example showing the kinds of information benchmarking tools generally require. The two Minnesota facilities rated with this tool are very different in terms of how they manage their energy use and

efficiency. One was a larger and older embedded operation that does not measure its energy consumption, whereas the other was a recently built co-location facility that does extensive measurement of energy consumption. One lesson learned from applying this particular tool is that it does not lend itself well to facilities that only provide co-location services. This is because it has a strong emphasis on virtualization that does not apply to the facility itself, but to the clients of the facility's business. It also demonstrates that even for a simple benchmark, significant effort and time must be invested to gather the data and information required to perform a proper assessment.

None of the vendor based tools offer numerical targets for facilities to attain. Rather, they are practices that the best data centers try to achieve. As explained in the next section, the benchmark tools selected for use are influenced by the goal a facility sets for itself.

Benchmarking is Part of a Process

Benchmarking tools are used in a process to evaluate a data center's energy efficiency. In benchmarking, efficiency is either compared to other facilities, or compared to the same facility over time. Benchmarking should be part of an overall plan to make a data center more efficient, based on the management concept of Plan-Do-Check-Act (as espoused by the American Society for Quality). Management understands this concept and should be familiar with it from other continual improvement projects. Improving energy efficiency is an on-going project that needs a recursive approach in order to anticipate or react to changes in client demand and equipment upgrades.

The first step in the process is goal setting, which is critical because it determines not only the direction of the entire evaluation process, but also which benchmarking tool will be most appropriate. Small to medium size data centers will probably gravitate to the qualitative side of benchmarking goals initially because they tend to not have the data to know what their actual data center energy consumption is. Even without knowing actual energy use these facilities can work towards the implementation of best practices that will have an impact on consumption and cost. Without actual measured energy use data, however, they will not be able to compare before and after consumption to quantify the energy savings achieved. Larger data centers probably have the equipment installed to gather energy use data and be interested in the more quantitative benchmarking offered by EPA's Portfolio Manager and possible ENERGY STAR rating.

Whatever metric and tool is chosen, gathering data and information is the next step. The kind of data will be determined by the tool selected which will determine the kind of measurement equipment needed. Data gathering may involve simply taking an inventory of equipment, or reviewing procedures to verify their implementation. It may also involve determining if benchmark recording/reporting software applications are useful. If electrical consumption data is to be gathered, sub-metering equipment will need to be obtained and installed if it is not already in place. Depending on the accessibility of the power infrastructure, temporary installations may be suitable such as the use of amp clamps with data loggers. Otherwise, it may mean shutting down the data center to install permanent metering equipment and software. The risk of a temporary shutdown is often a barrier to implementing quantitative energy tracking measures.

After data is collected, it will need to be manipulated or analyzed so it is compatible with the benchmarking tool. For example, it may be necessary to convert units of measure or determine power densities. For tools that output best-practices, it will probably consist of compiling the information into a target format compatible with the tool. After the tool has been populated with the relevant data and metrics, the results can be compared to other facilities or to an internally set goal.

Key Challenges in Applying Benchmark Tools

Use of Benchmark Tools

"The maxim 'you can't manage what you can't measure' has become a cliché in the business world. Yet, when it comes to energy management, most building owners and operators lack even basic information as to how their facility performs compared to their peers or best practices. (Sanders 2012_Bibliography)" Measurement of data center energy use in Minnesota data centers is the exception rather than standard practice. Companies that are in the business of providing data center services are more likely to measure and act on energy use information. IT managers that operated smaller data centers serving as integrated business units generally did not measure energy use based on the few visits conducted as part of this study. This would indicate that most of the state's data centers are not currently ready to do quantitative benchmarking.

Qualitative benchmarking tools may be appropriate for more short term use at Minnesota Data Centers. Even qualitative benchmarking requires significant time and resources from the data center operations personnel. Managers need to define the area of their operation they want to learn more about, decide on appropriate benchmarking tools to use, gather information required in the format required by the tool, run the tool and analyze/interpret the resulting information. This may be a lot to ask data center personnel who may be juggling multiple job functions.

In an effort to identify the opportunity to use qualitative benchmarking tools at Minnesota data centers, we applied the IBM tool to the information that was gathered during visits to two sites. The examples in Appendix B summarize the results of this qualitative benchmark assessment at smaller and a larger sized Minnesota data centers. The reason this tool was chosen is that it is very qualitative (and therefore likely to be applicable at all or most Minnesota data centers) and is very simple to use. Even so, not all the information required by the tool was available. This shows that, at least on short notice, the data centers did not have the information to completely fill in all the blanks of even a simple benchmark tool. Providing assistance to data centers on appropriate benchmarking tools for their applications and, where needed, providing resources to help use these tools and eventually implement energy use measurement would be important components to a strategic plan to optimize the collection of data center energy consumption in Minnesota.

Goal Setting

Aside from having the data, the other main aspect of benchmarking is having a goal for benchmarking. Answering the "why" question will help decide which benchmarking tool to use. Data centers, which serve as integrated business units of an organization and may be smaller in physical size and server capacity may simply want to see if they are implementing best management practices or looking at progress over time. More advanced sites may want to calculate PUE to identify specific energy efficiency opportunities. Large data centers whose business it is to rent space and/or services and who have energy measurement in place may want more comprehensive assessment tools in order to be certified for marketing purposes. For any size facility benchmarking will require effort and needs to be justified and prioritized within the overarching organizational goals.

Small to medium data centers will probably be interested in determining how they do historically. This involves obtaining baselines. Informational baselines that will describe the quantitative data at a point in time will consist of the current procedures used to run the data center and its inventory of hardware and software applications. The Green Grid's DCMM may be used to set targets for best practices and

see how implementation affects the PUE. A purely qualitative approach simply compares the practices of the facility to the best management practices put forward by DC Pro or the LBNL Self-Assessment tool. The assumption here is that best practices will maximize energy efficiency for any given set of conditions. Enabling actual measurement of PUE would be a useful follow up to qualitative benchmarking activities because it will allow the facility to measure and verify enhanced energy efficiency performance. Seeing quantitative results may motivate additional efficiency implementation.

Larger facilities and those providing services to other companies may wish to compare themselves to other data centers. Issues that need to be kept in mind include: the climate of the data center location, the floor area, the internal volume configuration, and infrastructure. All of these factors have an impact not only on comparing to samplings of other data centers, but also on what best practices will be feasible. Another aspect of comparative benchmarking is normalization; a facility must compare like processes with a peer grouping of data centers. The EPA's Portfolio Manager, which is the major tool that attempts comparing facilities to each other, automatically works to do this through its focus on ENERGY STAR ratings.

Table 14 is a matrix showing which benchmark tools may be most useful for types of data centers. The following rating scale is used:

0 - Probably not useful or relevant.

1 - Useful as a starting point to indicate direction for energy efficiency effort.

2 - Generally relevant to indicate more specific direction for energy efficiency.

3 - Should be very relevant and useful.

The larger and co-location data centers will use the most sophisticated and technical benchmarks, namely, DC Pro, Portfolio Manager, the Green Grid model, and ISO 50001. The smaller data centers, due to their limited internal resourcing, may benefit from the qualitative assistance tools that vendors and consultants provide.

Table 14: Matching Data Centers to Benchmarking Tools

	DC Pro	Portfolio Manager	LBNL Self-Guide	Green Grid Maturity Model	ISO 50001	Vendors
Server Room/Closet	0	0	0	0	1	3
Localized (private)	2	1	3	1	2	2
Localized (co-lo)	3	2	2	2	2	0
Mid-tier/Enterprise (private)	3	3	1	3	3	1
Mid-tier/Enterprise (co-lo)	3	3	0	3	3	0

Other Benchmarks

There are many other data center benchmarks that warrant mention here for completeness. These benchmarks do not have the high profile of those mentioned above. Many of these tools are specific to individual pieces of equipment, such as servers. As such, they are of more interest to electrical engineers and similar professionals that design servers and other specialized data center equipment.

The first of these smaller benchmarks is the Space, Wattage, and Performance benchmark (SWaP). It is used to analyze energy consumption and related equipment space characteristics. It was developed by Sun Microsystems (acquired by Oracle in 2010) in 2005 to allow to compare different vendors' equipment to each other.

The Standard Performance Evaluation Corporation has many benchmark suites related to specific data center equipment and software technologies. They range from CPUs to virtualization and web servers. These are highly technical and licensed proprietary products and, again, would be of interest to select professionals in engineering and design.

The Corporate Average Data center Efficiency (CADE) benchmark attempts to factor in useful work as it relates to energy consumption. It was developed by the Uptime Institute and McKinsey & Co. This tool attempts to capture the varying levels of data center activity during the day; therefore, it involves some estimates of percent utilization of the equipment. CADE has levels of factors and manipulation that depend on estimates of equipment and facility work calculated through a series of non-published algorithms.

There are many other benchmarks and tools available. The terms benchmarks, calculators, and metrics are used interchangeably. The less publicized ones described in this section are only a small sample of what is available. Data centers that want to do their own assessments have a wide range of tools available to them. However, data centers that work with a specific consultant or equipment vendor will probably use the vendors preferred tools.

Section 7: Key Data Center Challenges

The challenges or barriers that have the highest impact on efficiency efforts are:

- Lack of visibility to power demand or energy consumption within the data center, and therefore not knowing its relative impact to operating cost efficiency
- Split incentives between the data center operator and the building operator
- Reluctance toward organizational change

These key challenges apply almost exclusively to private and small to medium data centers. The public and large data center managers have the awareness, expertise, and direct business motivation to address energy efficiency effectively. In addition, these challenges all relate to a data center's knowledge of their situation rather than to a lack of technological or procedural possibilities.

Lack of Power Consumption Data

Data centers are using more energy every day due to the growth, analysis, storage, and transmission of information. There are numerous tools and information put out by many stakeholder organizations to make data centers more energy efficient at all levels. This includes extensive coverage on the U.S. EPA and U.S. DOE websites as well as by consultants and vendors that service the data center industry. However, many data center managers do not measure their power consumption and do not know how efficient they are. Any ECOs available to a center may not be considered because there is no measured baseline energy use from which to calculate a rate of return to justify a specific investment.

Based on site visits completed for this grant, the measurement of electrical consumption of data centers in general is lacking. Managers do not know the data center's PUEs at any level. At best, they make broad statements about the percentage they think the data centers use compared to the entire building, but they do not know how much the entire building uses. Some have implemented specific energy efficient technologies and methods, but they do not know how much energy or money they saved, if any. In addition, data center managers view the installation of monitor control systems (MCSs) as a major inconvenience, since their operation may be off-line during the installation. Measuring efficiency and/or improving it takes a back seat to reliability. Therefore, managers must be convinced that the energy efficiency benefits associated with MCS installation outweighs the perceived risk or hassle of the installation itself.

Split Incentives

The issue of split incentives is mainly a problem for the private and small to medium data centers that are embedded in a building and is related to how a facility manager calculates overhead. The data center operator or IT manager may want powerful machines and 24/7 reliability with little to no consideration for energy consumption because their department does not pay the power bill. The building manager may want to reduce energy costs, but does not know where the best return on investment is. In these kinds of scenarios, little attention is paid to the entire building's energy budget while trying to optimize division performance. Generally, the larger the building is in relation to the data center, the more difficult data center optimization will be due to the smaller data center energy consumption compared to the rest of the building. This data center energy consumption ratio is affected by the energy use of the rest of the building, defined by building make-up and operations.

A further complication is that a data center's components may not all be managed by a single individual or department. The UPS and cooling systems might be under the control of the facility manager. Or the IT manager may control the cooling and not the UPS. Additionally, the facility infrastructure and/or organization's history and configuration may further complicate how the various functions are administered.

Reluctance to Change

One finding from the discussions that occurred during site visits was that fear of change, loss of control, and loss of reliability are important issues that slow the adoption of energy efficient technologies and processes. Even if data center managers realize the operation could be more efficient, they are currently operating in a comfort zone with a history of success that they do not want to disrupt. As a result, the issue is not brought up to the organization's senior management and other priorities take

hold. Until some other strong incentive comes along, such as overbearing energy costs, IT managers will resist changes to how they operate centers simply because it is easier and safer than making an energy efficiency change within their data center.

Another aspect of this reluctance to change is the increased complexity and training issues that come along with ECOs. A good example is virtualization. Aside from the point that running ten operating systems on one machine takes more training and is more complex than running them on ten servers, backup and downtime issues are magnified when several operating systems operate on one server. This brings up the issue of the capacity and resources needed to run an effective backup system that uses redundant hardware. Managing this added complexity may work against the savings of virtualization, according to at least one industry expert (Pietroforte, 2008). The major benefit of virtualization is the ability to consolidate multiple servers to one. This benefit can outweigh the hassle of added complexity, but this complexity is an example of an inertial barrier to energy conservation opportunities.

In conclusion, the key barriers for ECO implementation are lack of measurement, split incentives, and reluctance to change. These are not only barriers in and of themselves, but they also affect each other depending on a data centers mission, history, and legacy issues. Overcoming these barriers will clear the path to justifying the efforts needed to minimize energy use, save significant operating cost and demonstrate a good return on investment. There are many energy efficiency options a data center manager can implement to save energy and money. A manager must study and vet the options in order to determine which ones will be effective in their situation. Each data center manager will have his/her own custom issues and implementation plans. However, a manager must overcome or effectively manage the key issues discussed here to move forward in pursuing energy conservation within his/her data center.

Section 8: Conclusion

There is a lack of information flow between utilities and their clients related to data center energy. In contrast to those expressly built to be data centers with data processing being their sole purpose, facilities that run their own data processing operations often developed over time on an ad hoc basis. Since the latter facilities started small, data processing managers were justified in thinking data center efficiency was not a problem for the company or utilities to worry about. However, incremental growth over time makes this assumption less true. The result is that utilities do not know which clients have a data center in spite of the fact that expansion in the data processing sector is growing quickly as well as the energy consumption that goes with it.

Utility CIPs in Minnesota address data centers within their overall energy consumption reduction and rebate programs. This lumping together of a quickly growing sector with other business sectors may be shortchanging the awareness and capability of data centers to contribute to a utility's CIP goals. The CIPs also cover data center issues with limited scope. Utilities that do have a stronger focus on data centers often depend on vendors and consultants to work with the client to develop and implement energy efficient technologies and procedures. The utility only becomes involved at the beginning to approve proposed work and when it comes time to evaluate the project for rebate purposes.

As a start, the following things could be done to enhance awareness of and action to improve data center energy efficiency.

1. Utility account managers should explicitly ask clients if they have a data center or server room or closet, and record that information on the account record.
2. Utilities can get involved more to help data centers measure the power their data centers are demanding and energy they are consuming. One option is to have an equipment lending program. The equipment would be able to measure power/energy consumption on a temporary basis so the client can have a starting point for future development. Along with the equipment, engineering assistance should be offered to assure the equipment is used properly and to help interpret results. Pacific Gas & Electric has such a program. If measurement of power/energy consumption proves useful, this temporary monitoring can be replaced with permanent power and energy tracking systems to capture continuous improvement opportunities.
3. Utility account managers can encourage their clients' data center managers to perform benchmarking exercises to increase awareness of current trends and compare internal performance with peer sites.
4. Utility account managers can raise awareness of rebates available from the utility by providing a listing of the specific actions that can be taken to obtain rebates.

At the state level, consideration can be given to the development of a program like Wisconsin's Focus on Energy. This is a state-wide effort to pool the resources and knowledge of all participating utilities. The collaboration or knowledge sharing that seems to happen between the Rochester, Owatonna, and Austin utilities may be a starting point.

This research has shown:

- Minnesota data center staff are aware of the energy efficiency options available although it is still unknown how much power typical Minnesota data centers demand or consume
- Many Minnesota data center managers do not know the impact of implementing ECOs on their organizations' bottom line
- Minnesota electric utilities appear to have limited awareness of the smaller data center operations in their service territory even though data center ECOs can have an impact on facility energy efficiency and have a role to play in helping utilities achieve their savings goals

Bibliography

(n.d.). Retrieved from National Data Center Energy Efficiency Information Program: http://uptimeinstitute.com/

(n.d.). Retrieved from AFCOM: http://www.afcom.com/

(n.d.). Retrieved from Twin Cities Chapter: Association of Energy Engineers: http://www.aeetwincities.org/

(n.d.). Retrieved from Portfolio Manager: http://www.energystar.gov/buildings/facility-owners-and-managers/existing-buildings/use-portfolio-manager

(n.d.). Retrieved from 42u: www.42u.com

(n.d.). Retrieved from Schneider: http://www.apc.com/template/country_selection.cfm

(n.d.). Retrieved from Emmerson: http://www.emersonnetworkpower.com/en-US/Pages/Default.aspx

(n.d.). Retrieved from Hewlett-Packard: http://www8.hp.com/us/en/business-services/it-services.html?compURI=1078623#.UZ0nEkrHYeV

(n.d.). Retrieved from Truetex: http://www.truetex.com/psychrometric_chart.htm

ADC Krone. (2008, October). Retrieved from TIA-942 Data Centre Standards Overview [White Paper]: http://www-935.ibm.com/services/us/igs/data-center/assessment.html

ASHRAE American Society of Heating, Refrigeration and Air-Conditioning Engineers Inc. (n.d.). Retrieved from ASHRAE Technical Committee 9.9: http://tc99.ashraetcs.org/

ASHRAE Technical Committee 9.9. (n.d.). Retrieved from ASHRAE American Society of Heating, Refrigeration and Air Conditioning Engineers, Inc: http://tc99.ashraetcs.org/

Audin, G. (n.d.). Data Center Power Usage Effectiveness. Retrieved from http://www.nojitter.com/post/229500630/data-center-power-usage-effectiveness-pue

Baillie, P. (2012). Dont' Run Your Own Data Center If Your're a Public IaaS. Retrieved from http://gigaomcom/2012/01/08/bailie-public-iaas

Bell, K., & Nidumolu, R. (n.d.). *Best Practices for Leading Edge Data Centers.* Corporate Eco Forum.

Bennett, D., & Delforge, P. (2012). *Small Server Rooms, Big Energy Change.* Natural Resources Defense Council.

Bouley, D., & Brey, T. (2009). *Fundametnals of Data Center Power and Cooling Efficiency Zones.* The Green Grid.

Boynton, J. (2011). *Microsoft: Our Goal is to Eliminate the Datacenter*. Retrieved from triplepundit.com: http://www.triplepundit.com/2011/03/microsoft-goal-eliminate-datacenter/

Brandon, J. (n.d.). *Saving Energy by the Server Room.* Retrieved from pcmag.com: http://www.pcmag.com/article2/0,2817,2271432,00.asp

Chernicoff, D. (n.d.). *The Shortcut Guide to Data Center Energy Efficiency.* Realtime Publishers.

Colorado Springs Utilities. (2005). *Free Cooling - Outside Air Economizer.* Colorado Springs Utilities.

Consortium for Energy Efficiency Data Centers & Business Computing Program Summary. (n.d.). Retrieved from c: http://library.cee1.org/content/cee-data-centers-and-it-program-summary

Data Center Dynamics. (n.d.). Retrieved from http://www.datacenterdynamics.com/

Data Center Operational Efficiency Self-Assessment. (n.d.). Retrieved from IBM: http://www-935.ibm.com/services/us/igs/data-center/assessment.html

E Source. (2013, April 9). *Data Centers: Taming the Energy Beast.* webinar.

ENERGY STAR. (n.d.). Retrieved from Event Recordings: https://esbuildings.webex.com/mw0401l/mywebex/default.do?siteurl=esbuildings

ENERGY STAR. (n.d.). Retrieved from Benchmark Your Data Center's Energy Efficiency: http://www.energystar.gov/index.cfm?c=prod_development.server_efficiency

Eugene Water and Electric Board. (2009). *Outside Air Economizers: Making them Work Right for You.* Eugene Water and Electric Board.

Glanz, J. (2012, Sept 22). Power, Pollution and the Internet. *The New York Times*.

Google. (2011). *Google's Green Data Centers: Network POP Case Study.* Google.

Google Summit. (2013, June). *How Green is the Internet?* Retrieved from Google green: http://www.google.com/green/efficiency/industry-collaboration/

Greenberg, S. (2006). *Best Practices for Data Centers: Lessons Learned from Benchmarking 22 Data Centers.* ACEEE Summer Study on Energy Efficient Buildings.

Greenberg, S. (2007). *Development of Energy Performance Benchmarks for Data Centers.* presentation: U.S. Environmental Protection Agency.

Haas, J. (n.d.). *Data Center Energy: Going Forward.* presentation: The Green Grid.

Huang, R., & Bramfitt, M. (2013). *For Utilities: Understanding and Designing Energy-Efficiency Programs for Data Centers.* presentation: U.S. Environmental Protection Agency.

IBM. (2012). *Data Center Operational Efficiency Best Practices.* IBM.

Intel. (2008). *Reducing Data Center Cost with an Air Economizer.* Intel.

ISO. (n.d.). *ISO 50001 Energy Management*. Retrieved from ISO.org: http://www.iso.org/iso/home/standards/management-standards/iso50001.htm

Koomey, J. (2008, September 23). Worldwide electricity used in data centers. *Environmental Research Letters, vol 3, no. 034008*.

Koomey, J. (2011, August 1). Growth in Data Center Electricity Use 2005 to 2010. Retrieved from http://www.analyticspress.com/datacenters.html

Koomey, J. (2013, June). *Internet Infrastructure*. Retrieved from Google Green: http://www.google.com/green/efficiency/industry-collaboration/

Krone, A. (n.d.). Retrieved from TIA-942 Data Centre Standards Overview: http://www.herts.ac.uk/__data/assets/pdf_file/0017/45350/data-centre-standards.pdf

Lizhe, W., & Khan, S. U. (2011). Review of Performance Metrics for Green Data Centers: a Taxonomic Study. *The Journal of Supercomputing*.

Marko, K. (2013). *Data Center Decision Time.* InformationWeek.

Masanet, E., Brown, R., Shehabi, A., Koomey, J., & Nordman, B. (2011). Estimating the Energy Use and Efficiency Potential of U.S. Data Centers. *Proceedings of the IEEE*, 1440-1453.

Mathew, P. (2009). *How Does Your Data Center Measure Up?* Lawrence Berkeley National Laboratory.

Mathew, P. (2010). *Self-Benchmarking Guide for Data Center Infrastructure: Metrics, Benchmarks, Actions.* Lawrence Berkeley National Laboratory.

Mills, E. (2003). *Benchmarking: What's Your Building's Energy IQ?* presentation: Lawrence Berkeley National Laboratory.

Minnesota Electricity Profile 2012. (2014, 5 1). Retrieved from U.S. Energy Information Association: http://www.eia.gov/electricity/state/minnesota/

Monroe, M., & Mukesh, K. (2009). *Data Center Metrics Track Results.* presentation: Data Center Pulse.

Panduit. (2012). *Impact of Air Containment Systems.* Panduit.

Sanders, M. (2012). *Ready to Retrofit: The Process of Project Team Selection, Building Benchmarking, and Financing Commercial Building Energy Retrofit Projects.* Lawrence Berkeley National Laboratory.

Schuetz, N., Kovaleva, A., & Koomey, J. (2013). *eBay Inc.: A Case Study of Organizational Change Underlying Technical Infrastructure Optimization.* Stanford University.

Server Inlet Temperatures and Humidity Adjustments. (2014, August 7). Retrieved from Energy Star: https://www.energystar.gov/index.cfm?c=power_mgt.datacenter_efficiency_inlet_temp

The Green Grid. (n.d.). Retrieved from http://www.thegreengrid.org/

The Green Grid. (2008). *Green Grid Data Center Power Efficiency Metrics: PUE and DCIE.* The Green Grid.

The Green Grid. (2010). *Data Center Efficiency Metrics: mPUE, Partial PUE, ERE, DCcE.* presentation: The Green Grid.

The Green Grid. (2011). *Case Study: The ROI of Cooling System Energy Efficiency Upgrades.* The Green Grid.

The Green Grid. (2011). *Data Center Maturity Model.* The Green Grid.

The Green Grid. (2012). *PUE: A Comprehensive Examination of the Metric.* The Green Grid.

Tschudi, W. (2006). Measuring and Managing Data-Center Energy Use. *HPAC Engineering*, 45-51.

Tuccillo, J. (n.d.). *Data Center Energy: Going Forward.* presentation: The Green Grid.

U.S. Environmental Protection Agency. (2006). *Server Energy Measurement Protocol.* U.S. Environmental Protection Agency.

U.S. Environmental Protection Agency. (2007). *Report to Congress on Server and Data Center Energy Efficiency.* U.S. Environmental Protection Agency.

U.S. Environmental Protection Agency. (2011). *Recommendations for Measuring and Reporting Overall Data Center Efficiency: Version 2.* U.S. Environmental Protection Agency.

U.S. Environmental Protection Agency. (2012). *Data Center Energy Efficiency Opportunities: What Managers Should Know.* U.S. Environmental Protection Agency.

U.S. Environmental Protection Agency. (2012). *Understanding and Designing Energy-Efficient Programs for Data Centers.* U.S. Environmental Protection Agency.

U.S. Environmental Protection Agency. (2013). *Portfolio Manager Quick Start Guide.* U.S. Environmental Protection Agency.

U.S. Environmental Protection Agency. (n.d.). *Utility Guide for Designing Incentive Programs Focused on Data Center Efficiency Measures.* Retrieved from Energy Star: http://www.energystar.gov/index.cfm?c=power_mgt.datacenter_utility_guide

Understanding and Designing Energy-Efficiency Programs for Data Centers. (2012, November). Retrieved from ENERGY STAR: http://www.energystar.gov/ia/products/power_mgt/ES_Data_Center_Utility_Guide.pdf?13b9-80a7

Uptime Institute. (n.d.). Retrieved from http://uptimeinstitute.com/

Walker, M., Bolioli, T., & Huang, R. (2012). *Data Center Energy Efficiency Opportunities.* presentation: U.S. Environmental Protection Agency.

Wasner, L., & Schwaller, D. (2011). *Adiabatic Basics: Types, Applications and Benefits of Adiabatic Humidification.* Dri-Steem Corp.

WSP Environment & Energy. (2011). *SalesForce.com and the Environment.* WSP Environment & Energy.

Appendix A: Data Gathering Form for Server Room

Data Gathering Form for Server Rooms

Physical
Raised Floor Y N
Room area:_____square feet

Electronics
Kind of equipment: Routers_____

Servers_____

UPSs_____
Batteries
Rotary

Sum of Rated Watts

Functions
Email
Internal Networking
Internet Services
Telecommunications
Storage

Cooling
Setpoint temperature_____
Setpoint humidity_____
CRACs_____

Free Cooling_____

Energy Consumption and Measurement
What is the metering situation?

Do they know the PUE?

Are there plans to expand or use off-site services?

Can they share utility bills for the previous two years?

Opportunities
Server utilization (potential for virtualization)

Appendix B: IBM Benchmarking Results of 2 MN

Facility 1

IBM Data Center Study

Your Demographics

Region	North America	Number of Employees	500 to 999
Industry Classification	Healthcare		

Server Closets	0	Localized Data Centers	1
Server Rooms	1	Enterprise-Class Data Centers	0
		Mid-tier Data Centers	0

Study Results

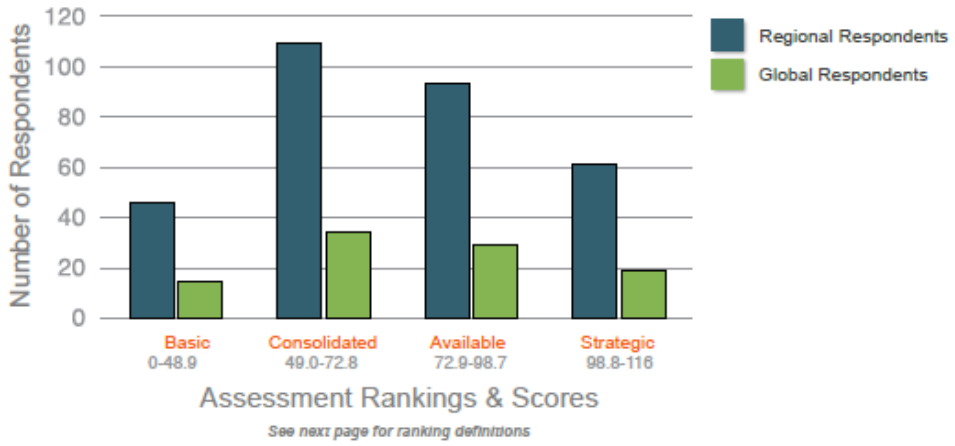

Your Results

1	Data Center Facilities Mgmt.	6 of 22	Basic
2	Servers	14 of 30	Consolidated
3	Storage	8 of 30	Basic
4	Network	12 of 20	Consolidated
5	Mgmt. & Staffing	4 of 14	Basic
Σ	Overall Score	43 of 116	Basic

IBM Data Center Study

Recommendations

Based on how your responses compare to the study participants in the study, you may want to evaluate how IBM solutions can help you to improve your data center operational efficiency.

Section 1 - Deploying modular data centers.

Section 2 - Accelerate server virtualization.

Section 3 - Blueprint for smarter storage management.

Section 4 - Networking for a smarter data center.

Section 5 - Better management of your IT infrastructure.

Other - Best practices resilient strategies.

Ranking Definitions

The IBM Data Center study identified four distinctive stages that differentiate data centers from one another as IT organizations move towards business alignment. Each stage characterizes the data center based on a combination of efficiency, availability and flexibility.

- **Basic:** The environment is relatively stable and is maintained based on short-term objectives, with standalone infrastructure as the norm. Companies gain the advantages of server consolidation but have not implemented tools to improve availability levels, which vary widely from application to application and site to site.

- **Consolidated:** Server virtualization and site consolidation are used to take out sizable numbers of systems and facilities and thereby lower capital costs. Server and storage technologies are well utilized and the possibilities for improving availability through virtual machine (VM) mobility are beginning to be realized.

- **Available:** IT infrastructure is treated as a general resource "pool" that can be allocated and scaled freely to meet the changing demands of workloads and to ensure uptime and performance while providing high rates of utilization. The focus is on measuring and improving service levels while building out governance procedures that capture business requirements.

- **Strategic:** Widespread adoption of policy-based automation tools lowers the manual complexity of the data center and ensures availability requirements and dynamic movement of applications and data. Instrumentation and metrics are consistently used to validate compliance with governance policies.

Data Center Study

Q1. What region best represents where you own and operate your data centers?
Answer: North America

Q2. What industry classification best represents your organization's principal business activity?
Answer: Healthcare

Q3. Please estimate the number of employees in your entire worldwide organization:
Answer: 500 to 999

Q4. How many of each of the following currently operates today within your organization?

Server Closet: A very small room or "closet" often outside of IT control that has little to no security or cooling.
Answer: 0

Server Room: A secondary computer location that usually is under IT control, usually less than 1000 sq ft and has some power & cooling as well as security capabilities.
Answer: 1

Localized data center: May be a primary or secondary location that is usually under 5,000 sq ft requiring badge or pin access and has some power and cooling redundancy to ensure constant temperature.
Answer: 1

Mid-tier data center: Is the primary server location for an organization that is a large room, but often 5,000-15,000 sq ft. It has superior cooling systems that are probably redundant and is probably protected by two levels of physical and digital security.
Answer: 0

Enterprise-Class data center: Is the primary server location for an organization. Is a very large room often in excess of 15,000 sq ft and has advanced cooling systems, redundant power and is protected by multiple levels of physical and digital security.
Answer: 0

1.1. If your organization was going to build or source new data center space next year, would you:
Answer: Build or source small increments of capacity over time as needed.

Data Center Study

Questions & Answers

1.2. Does your organization forecast future power demand of your primary data center?
Answer: No

1.3. Does your organization measure the Power Usage Effectiveness (PUE) of your primary data center?
Answer: No

1.4. If you had to upgrade the capabilities of your mechanical/electrical equipment at your primary data center today, how disruptive would this process be?
Answer: Very disruptive, we have very inflexible equipment which would need to be replaced.

2.1. Approximately what percent of your installed servers are virtualized (meaning they are hosting one or more virtual servers)?
Answer: 25%-74%

2.2. Does your organization move virtual machines across physical server hardware?
Answer: Yes

2.3. Thinking of the all the VMs in your environment, describe how automation tools are used (if at all). Select all that apply.
Answer: For performing routine maintenance.

2.4. Are you currently or considering offering internally, a self-service portal for virtual machines? In other words, virtual machines can be automatically ordered online with a choice of size, operating system and service level.
Answer: Not familiar with this.

3.1. Does your organization use any of the following storage optimization techniques? Select all that apply.
Answer: Storage virtualization technologies that abstract logical from physical storage.

3.2. Does your organization use any of the following storage management technologies? Select all that apply.
Answer: Capacity and Performance Management.

3.3. Which of the following describes your organizations primary approach to storage backup?
Answer: Backup to offsite tape

Data Center Study

Questions & Answers

3.4. Which of the following best describes your organizations primary approach to archiving?
Answer: Separate, structured archive for long term retention.

4.1. How would you describe your data center network management?
Answer: Availability is monitored by tools and processes.

4.2. To what extent is your data center network infrastructure dependent on vendor-specific architectures or technologies?
Answer: Vendor proprietary protocols exist in a limited area of the network.

4.3. Your data center network is architected to recover from an outage within:
Answer: Within Seconds

4.4. How would you describe the flexibility of your network to make changes based on the needs of the business?
Answer: The network is architected to facilitate timely introductions of new services.

5.1. Which of the following options best describes how your organization manages application portfolio decisions?
Answer: They are managed by individual application owners.

5.2. Thinking about all of your IT staffing resources, approximately how much is spent on new projects vs. maintenance?
Answer: 50-74% New Projects

5.3. Which of the following best describes your company's approach towards the adoption of new technology?
Answer: My company takes a 'wait and see' attitude toward new technology.

Facility 2

IBM Data Center Study

Your Demographics

Region	North America	Number of Employees	10 to 49
Industry Classification	Data Center Hosting/Collocation Center/Data Center Provider		

Server Closets	0	Localized Data Centers	0
Server Rooms	0	Enterprise-Class Data Centers	3
		Mid-tier Data Centers	0

Study Results

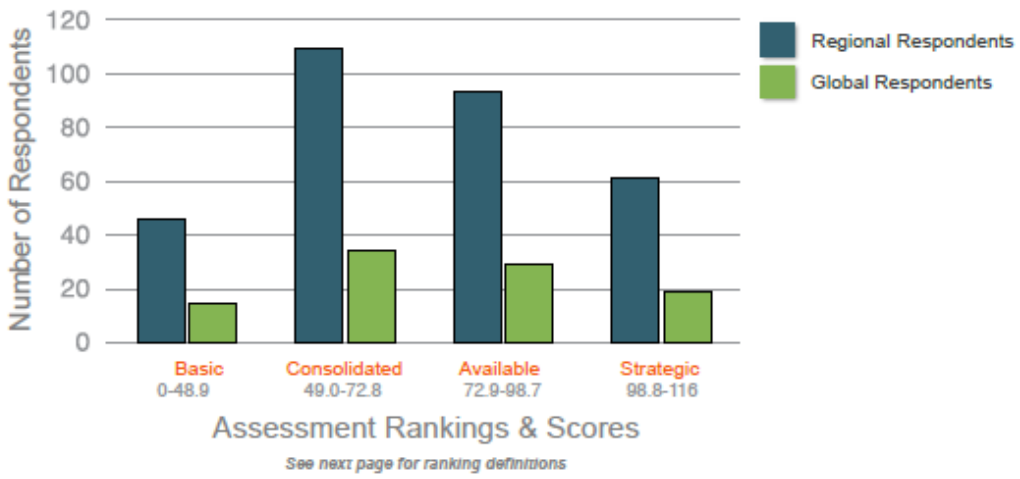

Your Results

1	Data Center Facilities Mgmt.	18 of 22	Available
2	Servers	4 of 30	Basic
3	Storage	20 of 30	Available
4	Network	15 of 20	Available
5	Mgmt. & Staffing	8 of 14	Consolidated
Σ	Overall Score	66 of 116	Consolidated

IBM Data Center Study

Recommendations

Based on how your responses compare to the study participants in the study, you may want to evaluate how IBM solutions can help you to improve your data center operational efficiency.

Section 1 - Deploying modular data centers.

Section 2 - Accelerate server virtualization.

Section 3 - Blueprint for smarter storage management.

Section 4 - Networking for a smarter data center.

Section 5 - Better management of your IT infrastructure.

Other - Best practices resilient strategies.

Ranking Definitions

The IBM Data Center study identified four distinctive stages that differentiate data centers from one another as IT organizations move towards business alignment. Each stage characterizes the data center based on a combination of efficiency, availability and flexibility.

- **Basic:** The environment is relatively stable and is maintained based on short-term objectives, with standalone infrastructure as the norm. Companies gain the advantages of server consolidation but have not implemented tools to improve availability levels, which vary widely from application to application and site to site.

- **Consolidated:** Server virtualization and site consolidation are used to take out sizable numbers of systems and facilities and thereby lower capital costs. Server and storage technologies are well utilized and the possibilities for improving availability through virtual machine (VM) mobility are beginning to be realized.

- **Available:** IT infrastructure is treated as a general resource "pool" that can be allocated and scaled freely to meet the changing demands of workloads and to ensure uptime and performance while providing high rates of utilization. The focus is on measuring and improving service levels while building out governance procedures that capture business requirements.

- **Strategic:** Widespread adoption of policy-based automation tools lowers the manual complexity of the data center and ensures availability requirements and dynamic movement of applications and data. Instrumentation and metrics are consistently used to validate compliance with governance policies.

IBM Data Center Study

Questions & Answers

Q1. What region best represents where you own and operate your data centers?
Answer: North America

Q2. What industry classification best represents your organization's principal business activity?
Answer: Data Center Hosting/Collocation Center/Data Center Provider

Q3. Please estimate the number of employees in your entire worldwide organization:
Answer: 10 to 49

Q4. How many of each of the following currently operates today within your organization?

Server Closet: A very small room or "closet" often outside of IT control that has little to no security or cooling.
Answer: 0

Server Room: A secondary computer location that usually is under IT control, usually less than 1000 sq ft and has some power & cooling as well as security capabilities.
Answer: 0

Localized data center: May be a primary or secondary location that is usually under 5,000 sq ft requiring badge or pin access and has some power and cooling redundancy to ensure constant temperature.
Answer: 0

Mid-tier data center: Is the primary server location for an organization that is a large room, but often 5,000-15,000 sq ft. It has superior cooling systems that are probably redundant and is probably protected by two levels of physical and digital security.
Answer: 0

Enterprise-Class data center: Is the primary server location for an organization. Is a very large room often in excess of 15,000 sq ft and has advanced cooling systems, redundant power and is protected by multiple levels of physical and digital security.
Answer: 3

1.1. If your organization was going to build or source new data center space next year, would you:
Answer: Build or source small increments of capacity over time as needed.

Data Center Study

Questions & Answers

1.2. Does your organization forecast future power demand of your primary data center?
Answer: Yes

1.3. Does your organization measure the Power Usage Effectiveness (PUE) of your primary data center?
Answer: Yes

1.4. If you had to upgrade the capabilities of your mechanical/electrical equipment at your primary data center today, how disruptive would this process be?
Answer: Moderately disruptive.

2.1. Approximately what percent of your installed servers are virtualized (meaning they are hosting one or more virtual servers)?
Answer: 1%- 24%

2.2. Does your organization move virtual machines across physical server hardware?
Answer: No

2.3. Thinking of the all the VMs in your environment, describe how automation tools are used (if at all). Select all that apply.
Answer: For moving VMs based on policies or SLAs.

2.4. Are you currently or considering offering internally, a self-service portal for virtual machines? In other words, virtual machines can be automatically ordered online with a choice of size, operating system and service level.
Answer: Not familiar with this.

3.1. Does your organization use any of the following storage optimization techniques? Select all that apply.
Answer: Automated tiered storage based on policies.

3.2. Does your organization use any of the following storage management technologies? Select all that apply.
Answer 1: Capacity and Performance Management.
Answer 2: Problem Management.
Answer 3: Service Catalog.
Answer 4: Asset Management/Inventory Management and Configuration Management.