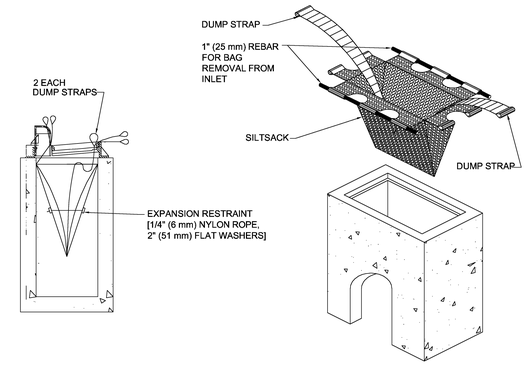

3 CATCH BASIN SEDIMENT FILTER SACK

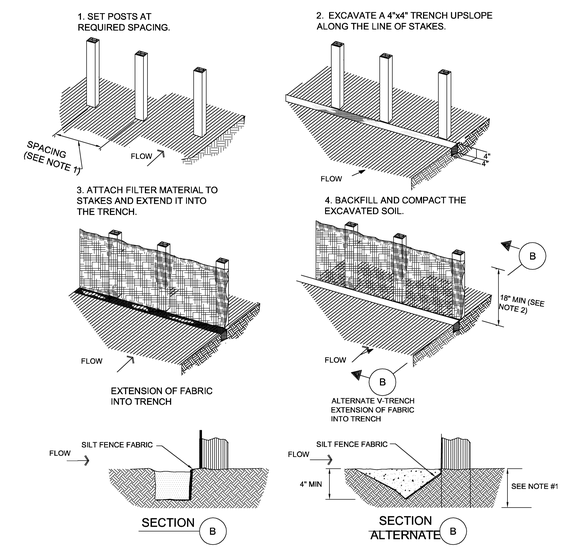

CORRESPONDING NOTES

1. 2 INCH THICK BY 2 INCH WOODEN STAKES TO BE SET AT MAX SPACING OF 3 FEET AND EMBEDDED A MIN OF 12 INCHES.

2. ATTACH FILTER FABRIC TO WOODEN STAKES. FILTER FABRIC FENCE SHALL HAVE A MIN HEIGHT OF 18 INCHES AND MAX HEIGHT OF 36 INCHES ABOVE NATURAL GROUND.

3. WHEN TWO SECTIONS OF FILTER CLOTH ADJOIN EACH OTHER THEY SHOULD BE OVERLAPPED 6 INCHES AT THE POSTS, AND FOLDED.

4. SILT FENCE FABRIC SHALL BE MIRAFI CO. "SILT FENCE STRUCTURE" OR APPROVED EQUAL

2 SILT FENCE

ISOMETERIC VIEW, NO SCALE

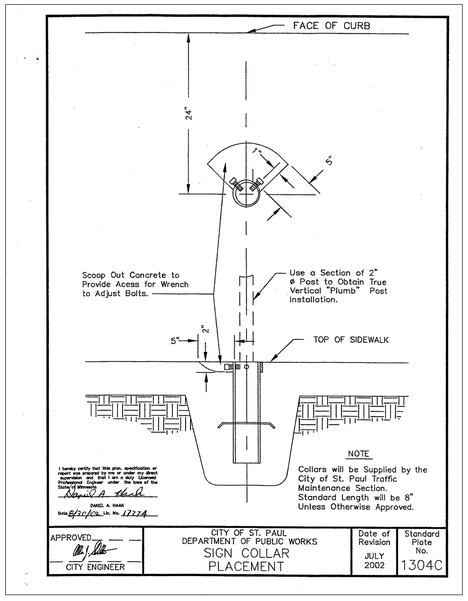

4 BREAKAWAY SIGN SUPPORT BASE

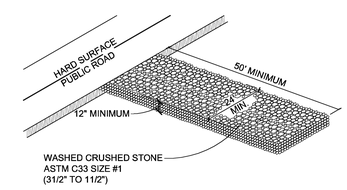

1 ROCK CONSTRUCTION ENTRANCE / EXIT

ISOMETERIC VIEW, NO SCALE

HGA + SCA
capitol restoration collaborative

Hammel, Green and Abrahamson, Inc.
Architecture | Engineering | Planning
420 5th Street North, Suite 100
Minneapolis, Minnesota 55401
Telephone 612.758.4000
Facsimile 612.758.4199

Schooley Caldwell Associates, Inc.
Architects | Engineers
Planners | Interior Designers
300 Marconi Boulevard
Columbus, Ohio 43215
Telephone 614.628.0300
Facsimile 614.628.0311

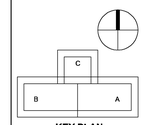

KEY PLAN

Minnesota State Capitol Repairs, Restoration, & Preservation

75 Rev Dr. Martin Luther King Jr Blvd
Saint Paul, MN 55155

STATE PROJECT NUMBER - 02CB0015

I HEREBY CERTIFY THAT THIS PLAN, SPECIFICATION OR REPORT WAS PREPARED BY ME OR UNDER MY DIRECT SUPERVISION AND THAT I AM A DULY LICENSED PROFESSIONAL ENGINEER UNDER THE LAWS OF THE STATE OF MINNESOTA

NAME: KENNETH HORNS
DATE: JUNE 21, 2013
REGISTRATION NUMBER: 18235

NO	DESCRIPTION	DATE
1	ADD #1	06/28/2013

REVISION HISTORY - THIS SHEET

HGA NO: 0476-061-00

SITE DETAILS

WORK PACKAGE 1

C900

© Hammel, Green and Abrahamson, Inc.

WWW.HGA.COM